Section II
Main Rotor Hub and Blade Assembly

TABLE OF CONTENTS

TABLE OF CONTENTS (Cont)

LIST OF TABLES

LIST OF FIGURES

LIST OF FIGURES (Cont)

LIST OF FIGURES (Cont)

Section II

Main Rotor Hub and Blade Assembly

2-1. MAIN ROTOR HUB AND BLADE ASSEMBLY.

2-2. DESCRIPTION. The main rotor assembly is a two-bladed, semi-rigid, seesaw type rotor with underslung mounting. (See figure 2-1) The blades are attached to the hub grips with bolts which have hollow shanks for installation of weights for static balance of hub and blade assembly. After balancing, the bolts must be kept with their respective rotor hub grips. Blade alignment is accomplished by adjustment of blade latches, which engage the root end of the blade. The blade grips are retained on the hub yoke by means of tension-torsion strap assemblies. Changes in blade pitch angle are made by rotating the grips on the yoke; each grip has two pitch change bearings. Oil reservoirs, with sight glasses, are provided for pitch change bearings in the grips and for pillow block bearings in the flapping axis on the 206-011-100-17 main rotor hub; grease lubrication is used on the 206-011-100-21 main rotor hub. The rotor blades are all metal. A flap restraint kit may be installed on the main rotor hub. The flap restraint assembly incorporates counterweights and springs which serve to position limited freedom flapping stops. The stops prevent excessive flapping of the main rotor during starting and shutdown but allow normal flapping at operating rpm.

2-3. TROUBLESHOOTING — MAIN ROTOR HUB AND BLADE ASSEMBLY. Troubleshooting procedures for the main rotor are contained in table 2-1.

Table 2-1. Main Rotor Hub and Blade Assembly Troubleshooting Procedures

INDICATION OF TROUBLE	PROBABLE CAUSE	CORRECTIVE ACTION
Vertical 1:1 vibration increasing with airspeed (approximately 6-1/2 per second)	Main rotor blades out of track	Track main rotor blades. (Refer to paragraph 2-19 .)
Lateral 1:1 vibration	Spanwise unbalance (normally vibration increases with lower rpm in out of ground effect hover)	Spanwise balance main rotor (Refer to paragraph 2-20 .)
	Chordwise unbalance (normally vibration increases with lower RPM in out of ground effect hover)	Chordwise balance main rotor. (Refer to paragraph 2-21 .)
	End play in excess of 0.004 inch on main rotor trunnion	Refer to Overhaul, Part 1 or Part 2, as applicable.
2/rev vibration (approximately 13 per second)	Insufficient friction on swashplate uniball	Test swashplate and support assembly. (Refer to Section IV.)
	Excessively loose control linkage or swashplate parts	Replace all parts found excessively worn.

Table 2-1. Main Rotor Hub and Blade Assembly Troubleshooting Procedures (Cont)

INDICATION OF TROUBLE	PROBABLE CAUSE	CORRECTIVE ACTION
2/rev vibration (approximately 13 per second) (Cont)	Tail boom attachment bolts loose or not up to correct torque	Retorque bolts 360 to 390 inch-pounds. (Refer to Section VIII.)
	Loose blade latch bolt/ nuts	Retorque nuts 75 to 95 foot-pounds. Use care not to disturb blade alignment.
	Deteriorated or separated pylon isolation mount for worn transmission to isolation mount attachment bolt or bearing	Replace defective parts. (Refer to Section VI.)
Spike knocking	Spike knocking will not be encountered in normal service with a serviceable isolation mount installed except in cases of extremely rough air or excessively abrupt maneuvers. Spike knocking may be encountered in normal service if the isolation mount is deteriorated	Replace isolation mount. (Refer to Section VI)
Autorotation rpm high (Low pitch setting on blades too low)	Pitch links too short	Lengthen both pitch links. (Refer to paragraph 2-19)
Autorotation rpm low (Low pitch setting on blades too high)	Pitch links too long	Shorten both pitch links. (Refer to paragraph 2-19)

2-4. REMOVAL — MAIN ROTOR HUB AND BLADE ASSEMBLY.

CAUTION

Do NOT allow main rotor grips or yoke to rotate on pitch change axis. If grip or yoke is allowed to rotate on the pitch change axis beyond 90 degrees, the main rotor grip retention strap/s must be replaced. Secure main rotor blade grip through the pitch horns to yoke with lockwire or suitable work aid.

a. Index pitch link assemblies (20, figure 2-1) for reinstallation in same position. (Refer to Section IV for flight control color code illustration.) Disconnect and remove pitch link assemblies (20, figure 2-1) by removing cotter pins (18 and 27), nuts (17 and 26), washers (16 and 25), and bolts (15 and 24).

b. Secure main rotor blades (34) and pitch horns to yoke with lock wire or holding work aids.

c. Cut and remove lockwire from bolt (2). Remove bolt (2), washer (3), and lock (4).

d. Remove mast nut (1). Use caution to prevent damage to flap restraint kit (6) during removal of mast nut.

e. Install blade tie-down on tip of one main rotor blade (34) to guide main rotor hub and blade assembly (9) during removal.

f. Install T100220 rotor hoisting sling or locally manufactured sling to remove main rotor hub and blade assembly (9).

CAUTION

Split cones will fall from mast when hub is raised. Make provisions to catch split cones.

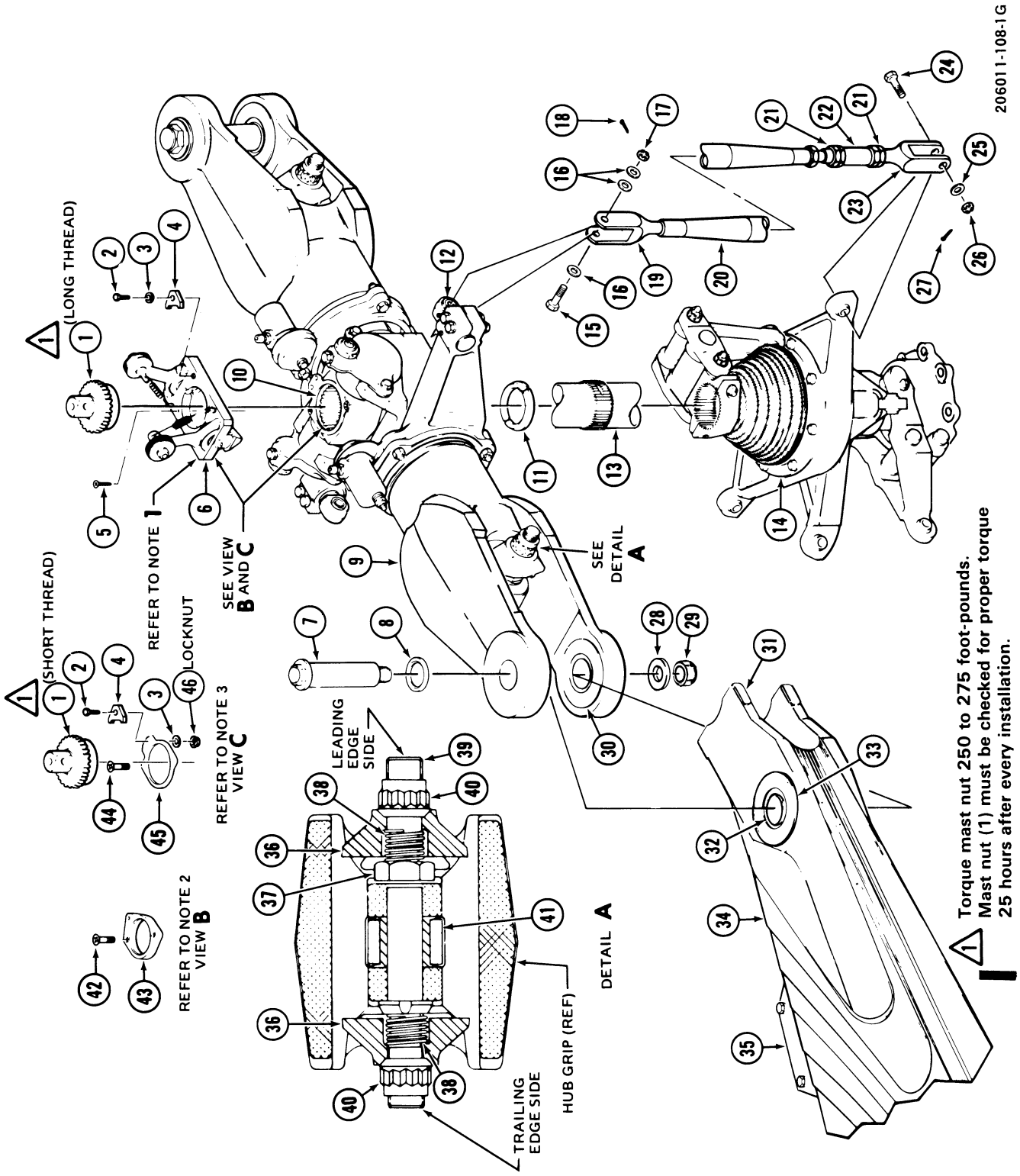

Figure 2-1. Main rotor hub and blade assembly (typical) (Sheet 1 of 2)

NOTES

1. Flap restraint kit (6) may be installed or removed at discretion of operator. With kit installed washers (43 and 45) are not required according to mast nut used. See view B and C.
2. Spacer washer (43) must be installed with (206-010-136) trunnion when flap restraint kit (6) is removed, and long threaded mast is used.
3. Spacer washer (45) must be installed if flap restraint kit (6) was not installed as delivered, and short threaded mast nut is used.

1. Mast Nut
2. Bolt
3. Washer
4. Lock
5. Screw
6. Flap Restraint Kit
7. Blade Bolt
8. Washer-Chamfered
9. Main Rotor Hub Assembly
10. Trunnion
11. Cone Set
12. Trunnion Bearing
13. Mast
14. Swashplate and Support Assembly
15. Bolt
16. Washer
17. Nut
18. Cotter Pin
19. Clevis-Upper
20. Pitch Link Assembly
21. Check Nut
22. Barrel
23. Clevis-Lower
24. Bolt
25. Washer
26. Nut
27. Cotter Pin
28. Washer
29. Nut
30. Buffer Pad (4 Reqd)
31. Wear Pad (8 Reqd)
32. Bushing
33. Grip Pad (2 Reqd)
34. Main Rotor Blade
35. Balance Weight
36. Blade Latch
37. Nut
38. Spring
39. Strap Bolt
40. Nut
41. Strap
42. Screw
43. Washer-Spacer
44. Screw
45. Washer-Spacer
46. Locknut

206011-108-2A

Figure 2-1. Main Rotor Hub and Blade Assembly (Typical) (Sheet 2 of 2)

Note

A cable sling fabricated from lengths of rubber hose slipped on the cables will prevent damage to the rotor hub. The sling should be passed through the opening in the rotor hub grip tangs to prevent blades from turning on pitch change axis durig rotor removal.

g. Attach a hoist to sling and lift main rotor hub and blade assembly (9) clear of mast (13) and remove cone set (11). Use caution to prevent damage to threads and splines on mast. Place assembly on a work stand and support main rotor blade (34) at their pre-coned angle.

2-5. REMOVAL — MAIN ROTOR BLADES.

Note

Main rotor blades may be removed from hub while hub is installed on helicopter. Extreme caution must be observed to prevent damage to the main rotor blades, main rotor hub, and helicopter.

a. Color code main rotor blade (34, figure 2-1), blade bolts (7), and grips of main rotor hub and blade assembly (9) for reinstallation in the same position. (Refer to Section IV for flight control color code illustration.)

b. Remove main rotor hub and blade assembly (9, figure 2-1) and support on a suitable stand with main rotor blades (34) at their pre-coned angle. (Refer to paragraph 2-4)

CAUTION

Do NOT change the position of nut (40), located on the leading edge side of main rotor blade (34). These nuts determine the alignment position of the main rotor blades.

c. Remove nut (29, figure 2-1) and washer (28) from blade bolt (7). Loosen nut (40, figure 2-1 , detail A) on trailing edge side of main rotor blades (34) and turn latch (36) 90 degrees.

d. Remove blade bolt (7) while keeping main rotor blade (34) at preconed angle and remove from grip. Store main rotor blades in a padded rack with leading edge down.

e. Loosely install blade bolt (7), washers (8 and 28), and nut (29) either in grip or main rotor blade from which removed. Check color coding.

f. Repeat subparagraphs c. through e. for opposite main rotor blade.

2-6. PREVENTIVE MAINTENANCE — MAIN ROTOR BLADES.

a. The following preventive maintenance of the main rotor blades should be accomplished every 25 and 50 hours, or 7 days, as follows:

(1) Clean entire blade with naphtha (item 36), or solvent (item 12).

(2) Wash blade surfaces with a mild detergent cleaner (item 79), or equivalent.

(3) Thoroughly rinse with water and dry with clean cloths.

(4) Apply a light coat of WD-40 corrosion preventive oil to all blade surface.

2-6A. INSPECTION — MAIN ROTOR BLADES.

a. Inspect blade surfaces for the following:

(1) Main rotor blade leading edge for erosion and corrosion. The blade area normally affected is from the blade tip and extends inboard 3 to 4 feet.

(a) Remove main rotor blades from helicopter.

Note

A minimum leading edge thickness of 0.625 inch must be maintained after corrosion clean-up. (See figure 2-2 area B.)

(b) Measure the chord line dimension (figure 2-2, Area A) of the blade, adjacent to the area of corrosion that will be cleaned-up, using a micrometer caliper or equivalent. This measurement minus the maximum of 0.125 inch clean-up at the leading edge will determine that the remaining leading edge thickness is within limits.

Example

Measured dimension A	13.009 inches
Maximum clean-up allowed	0.125 inches
Minimum dimension A measurement allowed to the deepest part of the cleaned-up area	12.884 inches

Note

Two squares clamped opposing each other and wire or feeler gages can be used to obtain dimension A accurately.

(c) Sand the corroded area in a spanwise direction using No. 320 or 400 grit sandpaper (item 90), or equivalent.

Note

Sanding shall be accomplished by hand only.

(d) Sand to a depth to remove the effects of corrosion and blend edges of the sanded areas into adjacent areas to maintain the shape of the air foil. (See figure 2-2 , areas B and C.)

Note

Do not sand the skin to the spar butt joint.

(e) Remove sanding residue with naphtha (item 36) or cleaning solvent (item 12).

(f) Support the blades in a horizontal position leading edge down. Swab sanded area with mild alcoholic phosphoric acid (item 33). Allow the swabbed area to remain dampened with acid for a minimum of 10 minutes. Wipe the excess acid from the blades with a dry cloth. Allow the blades to air-dry for 20 minutes.

Note

Do not allow the alcoholic phosphoric acid (item 33) solution to touch the painted surfaces. It is advisable to wear rubber gloves when using alcoholic phosphoric acid.

(g) Apply a light coat of WD-40 corrosion preventive oil to all blade surface.

(h) Record the location and depth of the cleanup.

(2) Main rotor blade inertia weight screw area for corrosion, blisters, raised areas in paint. cracks in paint, and finish or filler worn from inertia screw heads. The blade area normally affected is from bottom surface extending from blade tip inboard for approximately 29 inches.

b. If corrosion or cracks are noted during inspection of blade surfaces, the following shall be accomplished;

(1) Locally remove blade finish in affected area by sanding spanwise using No. 320 or 400 grit sandpaper (item 90), or equivalent.

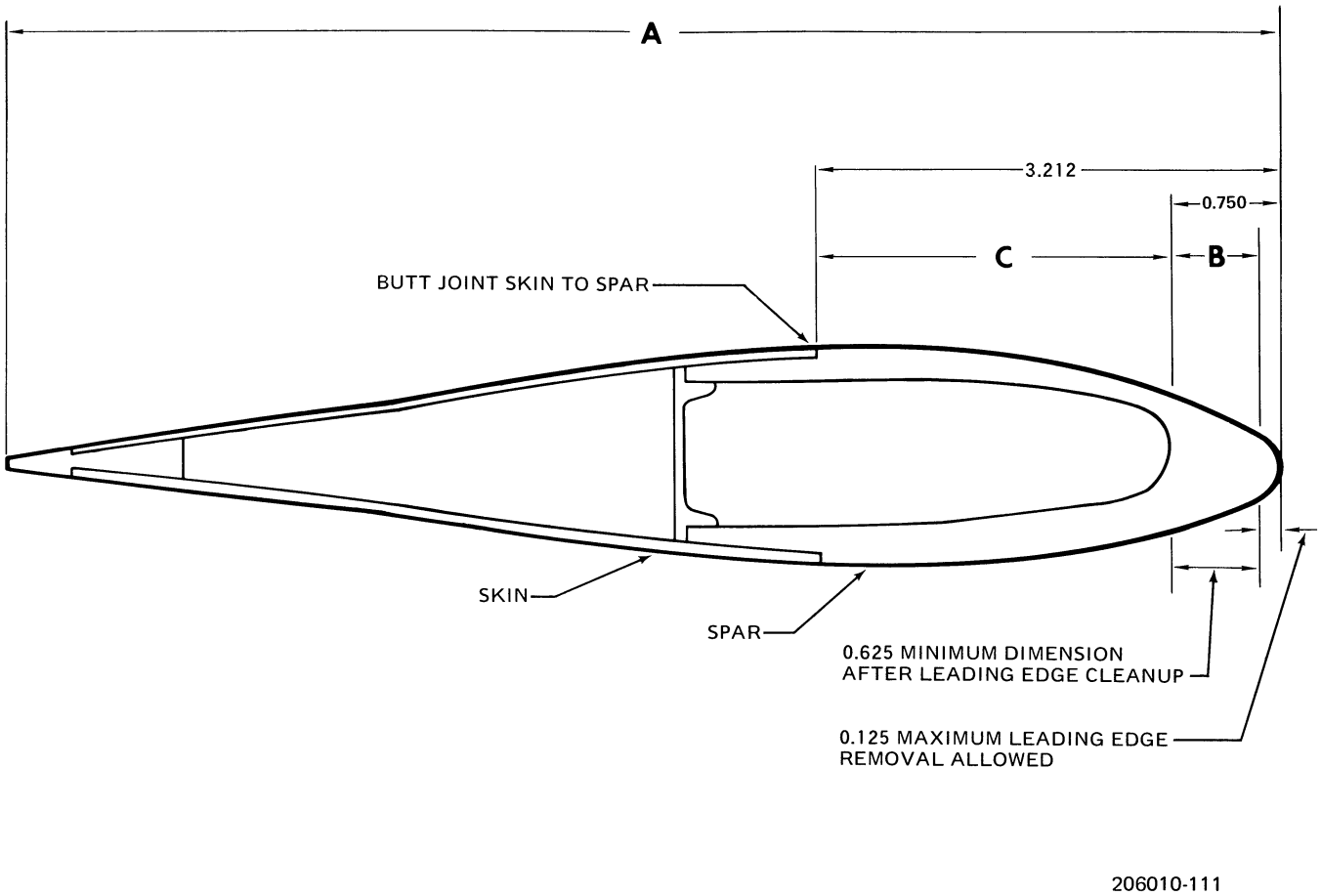

Figure 2-2. Measurement of Main Rotor Blade Spar

(2) Remove sanding residue with naphtha (item 36), or cleaning solvent (item 12).

(3) Swab sanded area with mild alcoholic phosphoric acid (item 33). Allow the swabbed area to remain dampened with acid for a minimum of 10 minutes. Wipe the excess acid from the blades with a dry cloth. Allow the blades to air dry for 20 minutes.

Note

Do NOT allow the alcoholic phosphoric acid solution (item 33) to touch the painted surfaces. It is advisable to wear rubber gloves when using alcoholic phosphoric acid.

(4) Inspect suspected area with fluorescent penetrant kit (item 103), or equivalent. If cracks are noted remove blade from service and contact Product Support Manager, Bell Helicopter Textron, P.O. Box 482, Fort Worth, Texas 76101.

c. Corrosion, cracks or other noted damage shall not exceed the main rotor blade inspection limits specified in Section II, Rework, Part 3.

d. Clean blade bushing (32, figure 2-1) with solvent (item 12) and wipe dry. Inspect inside diameter of bushing for condition; if pitted refer to Section II, Rework Part 3. Coat bushing with corrosion preventive compound (item 24).

e. Repair blade surface. (Refer to Section II, Rework, Part 3.)

f. Record the location and depth of the clean up.

g. Wax blade surfaces using a non-siliconized wax (item 78) or spray.

h. Install tape on rotor blades for erosion protection. (Refer to Section II, Rework, Part 3.)

2-7. Deleted.

2-8. INSPECTION AND REPAIR — MAIN ROTOR HUB.

a. Inspect main rotor hub component parts for mechanical and corrosion damage. Damage may be polished out as follows:

(1) Inspect depth of damaged area to ensure limits of figure 2-24 through 2-34 are not exceeded before repairs and that limits will not be exceeded after repairs.

(2) Polish out reparable nicks, scratches, and sharp dents with No. 400 grit or finer abrasive cloth or paper (item 13 or 15). Blend edges of repaired area into the surrounding surface to a smooth contour.

(3) Touch up brush cadmium (item 58) on previously plated parts and alodine (item 6 or 32) to repairs of aluminum parts. (Refer to paragraphs 1-47 and 1-57.)

(4) Spot paint repaired areas, as required, with finish listed in table 2-5 for main rotor hub and table 2-6 for main rotor blades.

b. Inspect blade bolts (7, figure 2-1) for wear, fretting, corrosion, and score marks. Polish out damaged areas in accordance with steps a(2) and a(3). Repairs shall not exceed limits specified in figure 2-27. Replace solid film lubricant (item 16 or 46) coating removed during polishing. (Refer to Section II, Overhaul, Part 1 of Part 2.)

c. Inspect two buffer pads (30, figure 2-1) on each main rotor blade (34) grip for voids and looseness. Pads must be replaced if loose or void area is noted. (Refer to Section II, Overhaul, Parts 1, 2, or 3, as applicable.)

d. Inspect trunnion (10, figure 2-1) bearings for freedom of movement and splines for nicks, burrs and scratches. Dress splines with fine India stone (item 95) if necessary.

e. Inspect the main rotor hub for evidence of oil or grease leakage. Some seepage from the main rotor grip seals is acceptable. Oil leakage is excessive and seals should be replaced when loss of oil is equivalent to the amount visible in the reservoir sight glass during a flight of two hours duration or one 24 hour static period. If required, replace main rotor grip seals. (Refer to paragraph 2-9 or 2-10, as applicable.)

f. Inspect trunnion bearings (12, figure 2-1) for axial play. Axial play must not exceed 0.020 inch.

g. Inspect all main rotor pitch link assemblies upper clevis (1, figure 2-3, 2-4, 2-5, or 2-5A) for wear in clevis area contacted by aligning ear of pitch horn bearing. Wear not exceeding 0.125 inch deep is permissible, provided lower clevis does not contact swashplate outer ring horns. When worn to maximum limit, rotate the pitch link assembly 180 degrees to unworn side of the upper clevis.

h. Inspect all main rotor pitch link assemblies for cracks and corrosion as follows:

(1) Every 100 hours, visually inspect the outside diameter and the ends of the tube assemblies with a 3X magnifying glass in the areas indicated. (See figure 2-3 and 2-4.)

(2) After flight in rain and each time the pitch link assemblies are adjusted, inspect tube assemblies for corrosion. Apply corrosion preventive compound (item 24A) to the following areas. (See figures 2-3 and 2-4.)

(a) The threads of the upper and lower clevises (1 and 7, figure 2-3 and 1 and 8, figure 2-4).

(b) The ends of the tubes (3).

(c) The mating faces of the locks (4 and 5, figure 2-3, and 5 and 6, figure 2-4) and nuts (2 and 6, figure 2-3, and 2 and 7, figure 2-4).

(d) The top surfaces of the nuts (2 and 6, figure 2-3, and 2 and 7, figure 2-4) after they are properly torqued.

i. Inspect all pitch link assemblies for damage and corrosion in excess of limits specified in Section IV. Apply corrosion preventive compound (item 24A) to all threads of each reassembly. (See figure 2-3, 2-4, 2-5, or 2-5A.)

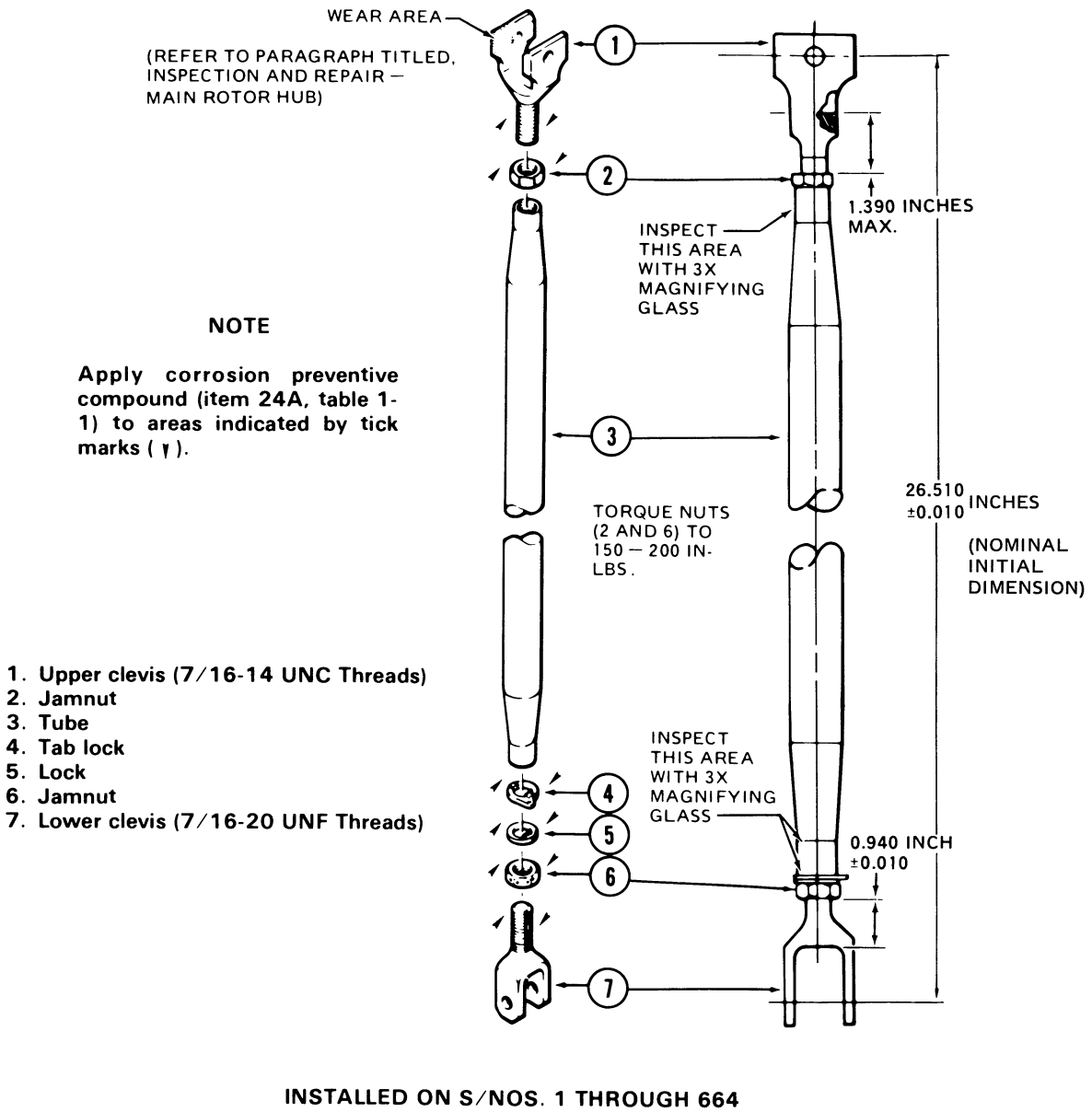

NOTE

Apply corrosion preventive compound (item 24A, table 1-1) to areas indicated by tick marks (▾).

1. **Upper clevis (7/16-14 UNC Threads)**
2. **Jamnut**
3. **Tube**
4. **Tab lock**
5. **Lock**
6. **Jamnut**
7. **Lower clevis (7/16-20 UNF Threads)**

INSTALLED ON S/NOS. 1 THROUGH 664

206010-158

Figure 2-3. Pitch link assembly (206-010-330)

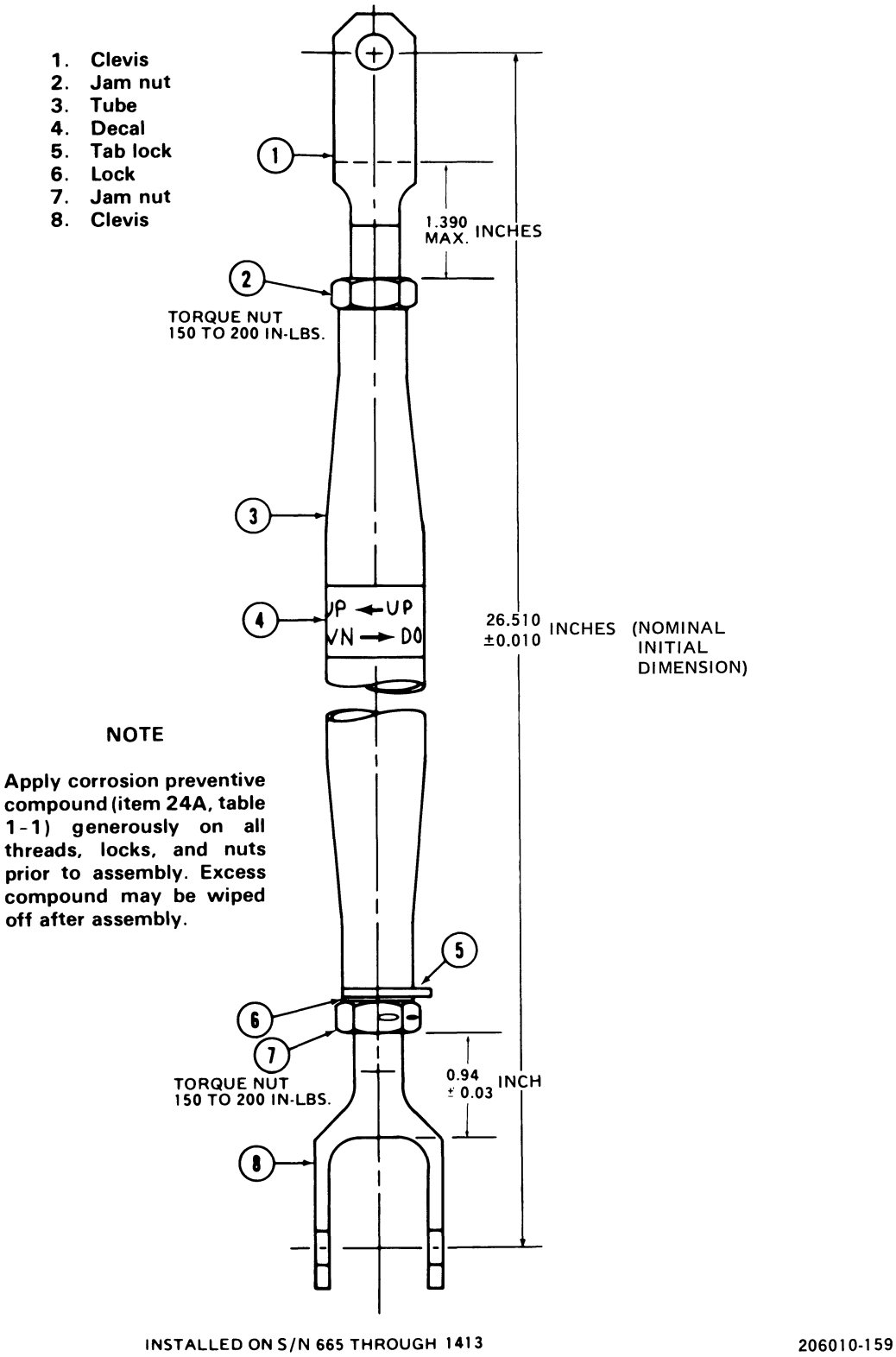

Figure 2-4. Pitch link assembly (206-010-342)

1. Clevis (bonded)
2. Tube assembly
3. Decal
4. Insert (bonded)
5. Jamnut
6. Barrel
7. Jamnut
8. Clevis

NOTE

1. Apply corrosion preventive compound (item 24A, table 1-1) to all threads at each reassembly.

2. Torque jamnuts (5 and 7) to barrel (6) 150 to 200 inch-pounds.

3. Safety barrel (6) to insert (4) with 0.032 inch lockwire.

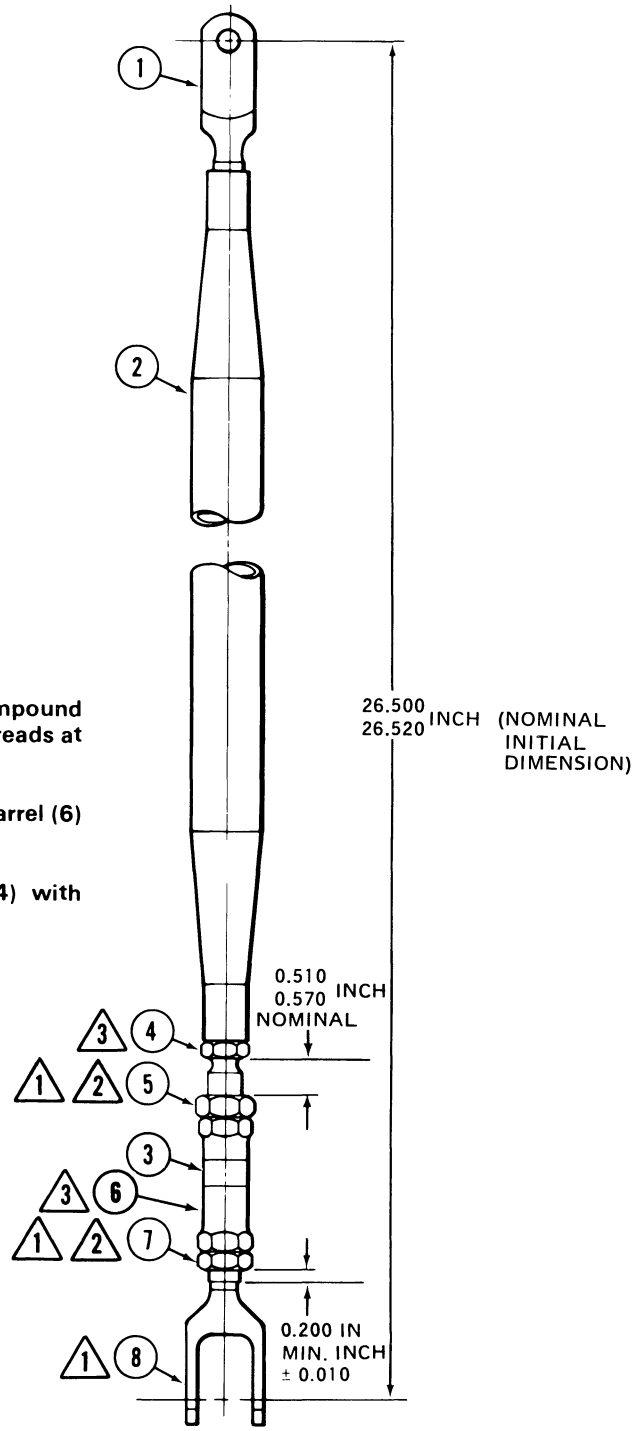

Figure 2-5. Pitch link assembly (206-010-355)

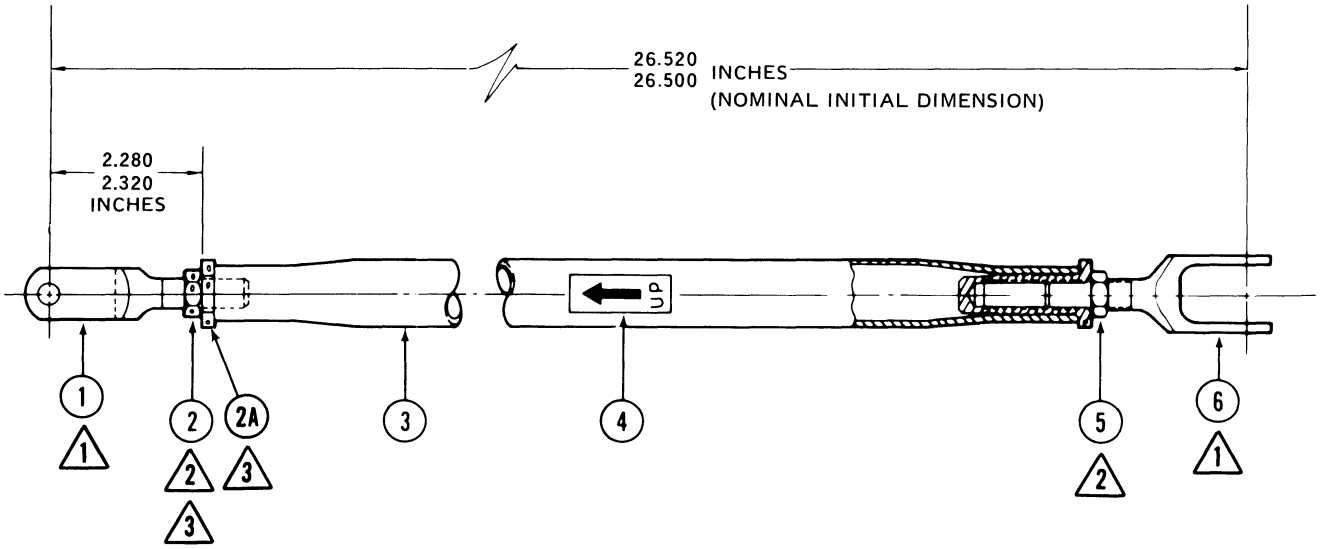

CAUTION: ENSURE THAT DECAL (4) IS POINTING UP.

NOTES:

1. Apply corrosion preventive compound (item 24A, table 1-1) to all threads at each reassembly.
2. Torque jamnut (2 and 5) 150 to 200 inch-pounds.
3. Secure jamnut (2) to insert (2A) with 0.032 inch lockwire.

1. Clevis
2. Jamnut
2A. Insert
3. Tube
4. Decal
5. Jamnut
6. Clevis

206010-159-2

Figure 2-5A. Pitch link assembly (206-010-360)

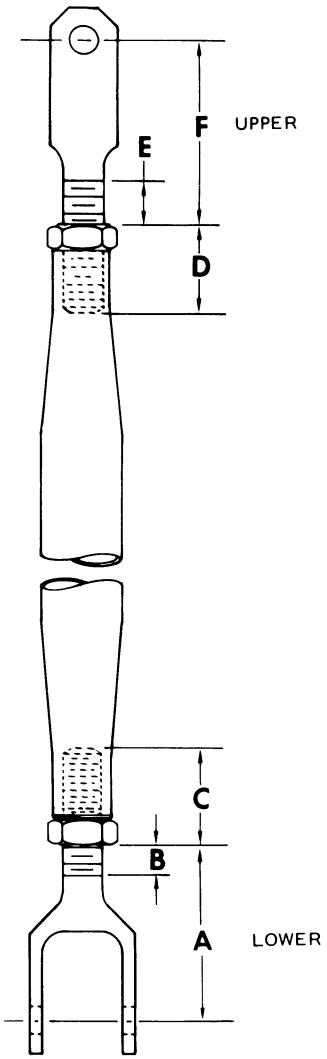

NOTE

1. Use any dimension that is most convenient to determine minimum clevis thread engagement.

2. Maximum threads shown in "B" and "E" are perfect threads. Some clevises have two imperfect threads.

PITCH LINK PART NUMBER	A MAX. INCH	B MAXIMUM INCH	B MAXIMUM THREAD	C MIN. INCH	D MIN. INCH	E MAXIMUM INCH	E MAXIMUM THREAD	F MAX. INCH
206-010-330-005	2.106	0.511	10	0.769	0.760	0.520	7	2.300
206-010-330-009	2.656	1.011	20	0.769	0.760	1.020	14	2.800
206-010-330-011	2.656	1.011	20	0.769	0.760	1.020	14	2.800
206-010-342-003	2.483	0.858	17	0.892	0.760	1.100	14	2.800
206-010-360-001	2.240	0.460	6	0.760	0.769	1.011	20	2.791
206-010-360-003	2.240	0.460	6	0.760	0.769	0.451	9	2.231

CLEVIS THREAD ENGAGEMENT

206010-148-2

Figure 2-5B. Pitch link assembly (typical)

2-9. REPLACEMENT OF GRIP SEALS — MAIN ROTOR HUB (206-010-100).

Note

Identify parts for reinstallation on same side if both grips are removed. Position main rotor hub on a suitable work stand or bench to allow disassembly and layout of parts. The following procedure provides instructions, for the removal, inspection, and installation of static stop, strap fitting, ring, pin, and strap. These parts do not require removal unless oil leakage or damage is evident.

a. If installed, remove flap restraint (6, figure 2-1) and screws (5), or remove screws (42, figure 2-1 , view B) and washer-spacer (43).

b. Remove nuts (46, figure 2-6), washers (47 and 51), and blade bolts (53) from tangs of grips (38).

c. Remove and disassemble one or both grips (38) as follows:

(1) Remove cotter pins (41), covers (42), and nut (40) from leading edge side of grip (38) and remove latch (39) and spring (43). It is not necessary to remove trailing edge nut (40), latch (39), or spring (43).

Note

Cotter pins (41) and covers (42) are installed on (206-010-100-3, -5, and -7) main rotor hubs on leading edge side only.

(2) Remove nut (44) and washer (45) from grip (38). Use (T101554) socket wrench to remove nut (44). (See figure 1-13 for fabricating (T101554) socket wrench.) Pull strap bolt (50, figure 2-6) from grip (38).

(3) Remove nuts (52, washers (28) and bolts (27) from pitch horn (19) and grip (38). Pull grip outboard and separate pitch horn. Allow oil to drain into a container. Remove grip and pitch horn from yoke (1). Discard packing (33).

(4) Cut lockwire from bolts (5) at static stop (3) and remove. Remove bolts (5), washers (4), static stop (3), shims (2), and rubber stop (6).

(5) Trim sealant from around inboard end of strap fitting (9) and surface of yoke (1) with a plastic scraper. Push strap (10) inboard in yoke (1) to break sealant around strap fitting (9). Remove pin (7), ring (8), strap fitting (9), and strap (10) from yoke.

(6) Inspect tension/torsion straps (10) for wire strand failures and for abnormalities as follows:

(a) A total of 25 broken wires (50 loose ends) protruding through urethane coating of any one of the 8 outside corners is cause for rejection. A total of 400 loose ends found over the entire strap surface is cause for rejection.

(b) Strap bulge in excess of 0.06 inch outside the normal straight contour is cause for rejection. Bulging of strap cross-section in any area from the ends of the strap to 3.5 inches inboard is normal and not cause for rejection.

(c) Cracks in urethane coating are acceptable providing wires are not visible.

(d) Delamination of urethane coating from the bushing is acceptable. Delamination may cause the wires to be visible and is not cause for rejection. Delamination in any other area is cause for rejection.

(e) A permanent set in twist may occur and is not cause for rejection.

(f) Strap stiffness can vary when flexed in an unloaded condition and is not cause for rejection.

(g) Oil contamination resulting in swelling of the urethane coating is cause for rejection. If oil has come in contact with strap but swelling has not occurred, strap assembly shall be cleaned with denatured alcohol to remove all traces of oil.

(h) Displacement of urethane around bushings and inner surface of wire bundle is cause for rejection.

(j) Cracks in strap bushings are cause for rejection. Inspect using a ten power glass.

(k) Inspect bushings for fretting corrosion. A maximum of 0.005 inch in depth for 25 percent total area is allowed on bushing flange surfaces. A maximum of 0.002 inch in depth is allowed for one-fourth of total bushing bore surfaces.

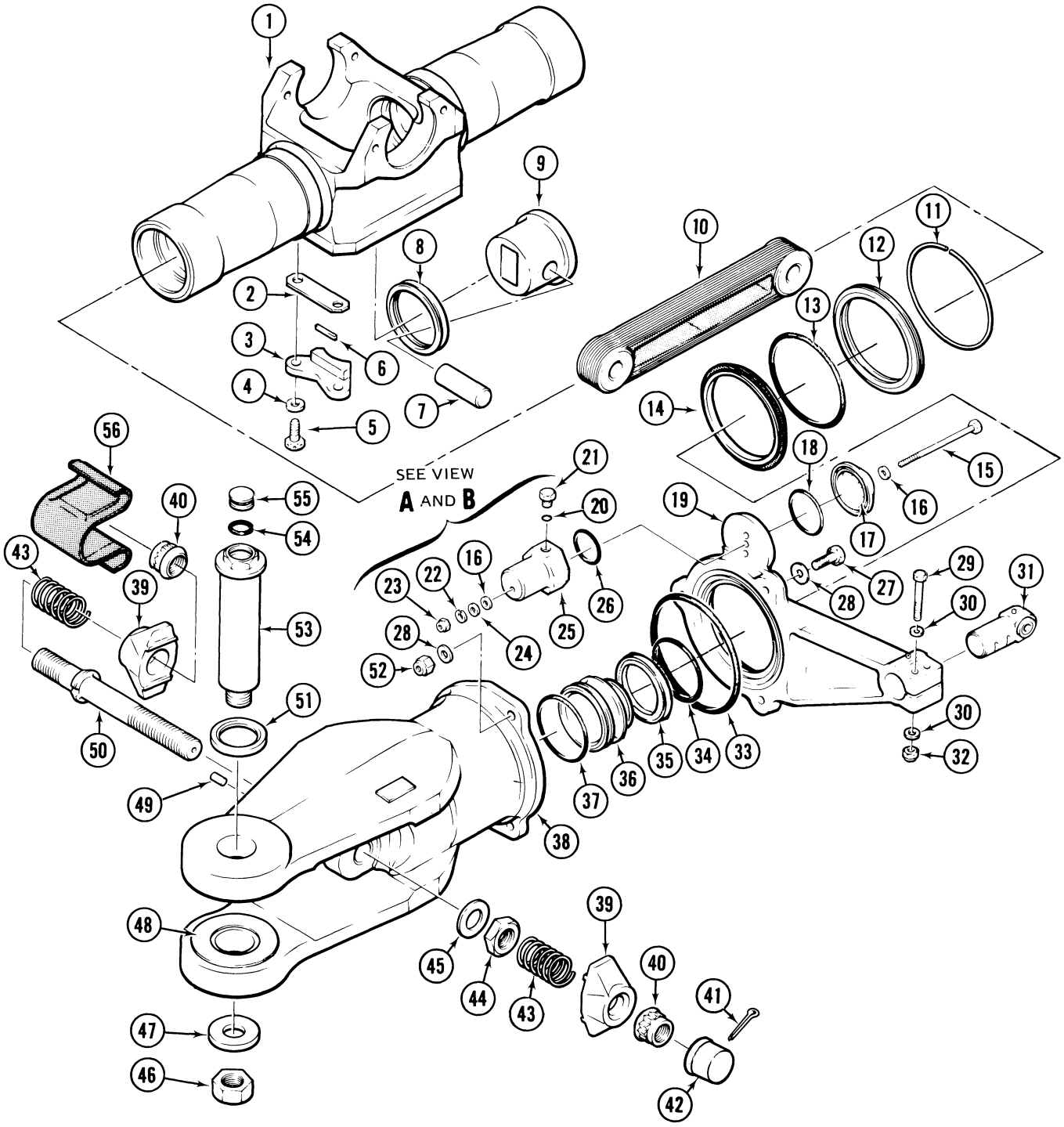

206010-113-1

Figure 2-6. Main Rotor Hub Grip Repair (Sheet 1 of 2)

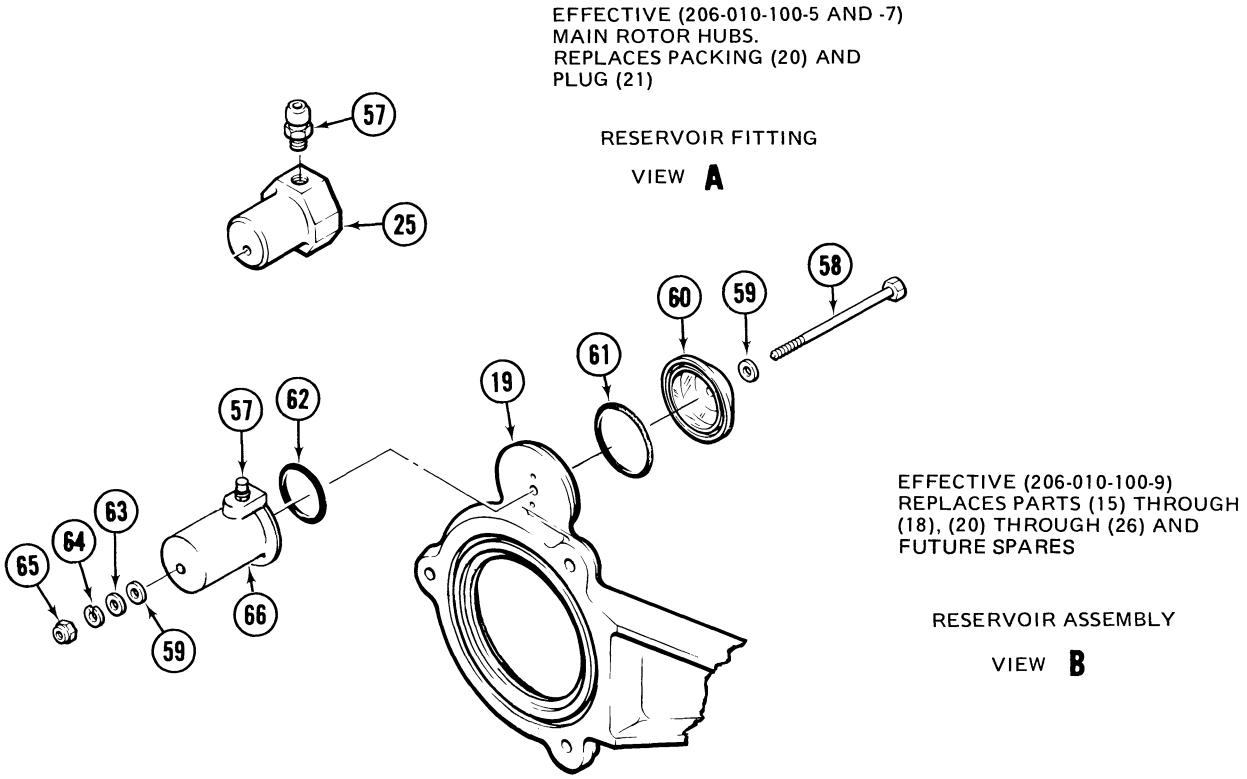

1. Yoke
2. Shim
3. Static Stop
4. Washer
5. Bolt
6. Rubber Stop
7. Pin
8. Ring
9. Strap Fitting
10. Strap
11. Retaining Ring
12. Retainer
13. Packing
14. Seal
15. Bolt
16. Stat-O-Seal
17. Sight Glass
18. Packing
19. Pitch Horn
20. Packing
21. Plug
22. Lockwasher
23. Nut
24. Washer
25. Reservoir
26. Packing
27. Bolt
28. Washer
29. Bolt
30. Washer
31. Bearing
32. Nut
33. Packing
34. Packing
35. Excluder
36. Retainer
37. Packing
38. Grip
39. Latch
40. Nut
41. Cotter Pin
42. Cover
43. Spring
44. Nut
45. Washer
46. Nut
47. Washer
48. Buffer Pad
49. Locking Pin
50. Strap Bolt
51. Washer
52. Nut
53. Blade Bolt
54. Packing
55. Cap
56. Closure
57. Reservoir Fitting
58. Bolt
59. Stat-O-Seal
60. Sight Glass
61. Packing
62. Packing
63. Washer
64. Lockwasher
65. Nut
66. Reservoir

206010-113-2

Figure 2-6. Main Rotor Hub Grip Repair (Sheet 2 of 2)

(7) Insert a wooden dowel or aluminum tube (2.093 to 2.125 inches in diameter by 12 to 14 inches in length, see figure 1-13 for fabrication and use of work aid) into retainer (36, figure 2-6) in bore of grip (38). Rock dowel or tube to break sealant bond and remove retainer (36) from grip. Remove excluder (35) and packings (34 and 37) from retainer (36). Discard packings and excluder.

(8) Inspect retainer (36) and mating surfaces in bore or grip (38) and journal of yoke (1) for nicks, scratches, and wear.

(9) Remove retaining ring (11), retainer (12), packing (13), and seal (14) from pitch horn (19). Discard packings and seal.

d. Discard all packings, seals, washers, and self-locking type nuts.

e. Clean all main rotor grip parts with solvent (item 12). Remove sealant from parts with a plastic scraper and methyl-ethyl-ketone (item 17). Ensure all old sealant has been removed from all areas. (See figure 2-7 for sealant areas.)

f. Inspect all parts for serviceability. If doubt exists as to the serviceability of any part, refer to Section II, Overhaul, Part 1, for detailed inspection, repair and replacement procedures.

g. Install retainer (36, figure 2-6) with new excluder (35) and new packings (34 and 37) in grip (38) as follows:

(1) Clean grooves of retainer (36) and mating surface area in bore of grip (38) with naphtha (item 36).

(2) Fabricate main rotor hub excluder mandrel and packing spoon work aids. (See figure 1-13 for fabrication instructions.)

(3) Insert small end of excluder mandrel work aid into inboard end of retainer (36, figure 2-6). Position new excluder (35) on mandrel with lip pointing outboard. Slide excluder onto retainer and into groove. (See figure 2-8 .)

(4) Insert new packing (34, figure 2-6 under lip of excluder (35) using fabricated packing spoon.

(5) Apply a coating of sealant (item 7, table 1-1) to outboard groove of retainer (36, figure 2-6) and install a new packing (37) in groove. Recoat packing and groove with sealant. (See figure 2-7, detail C.).

(6) Apply a film of sealant (item 7, table 1-1) to mating surface area in bore of grip (38, figure 2-6).

(7) Install retainer in grip (38) with packing (37) end first until fully seated in end of grip bore.

CAUTION

During sealant cure, do not heat grips (38) above 200°F(93°C). Damage to packings (34 and 37) and excluder (35) will occur.

(8) Cure sealant (item 7, table 1-1) for 72 hours at 70° to 80°F(21° to 27°C). Alternate cure is 1 hour at 70° to 80°F(21° to 27°C) plus 2 hours at 175°F(79°C).

h. Install retainer (12, figure 2-6) in pitch horn (19) with new packing (13) and seal (14) as follows:

(1) Ensure all areas that are to receive sealant are clean and that all old sealant has been removed. (See figure 2-7) Final clean sealant areas with naphtha (item 36, table 1-1).

(2) Apply a coating of sealant (item 7, table 1-1) to groove in outside diameter of retainer (12, figure 2-6) and install a new packing (13) in groove with sealant. Recoat groove and packing. (See figure 2-7, detail B.)

(3) Apply a film of sealant (item 7, table 1-1) to inside diameter of pitch horn (19, figure 2-6) and outside diameter of new seal (14).

(4) Carefully press retainer (12) and seal (14) into inboard side of pitch horn (19) with lip on seal pointing outboard. (See figure 2-7, detail B.)

(5) Install retaining ring (11, figure 2-6) in pitch horn (19). Apply a bead of sealant (item 7, table 1-1) to retaining ring (11, figure 2-6) and mating surfaces of retainer (12) and pitch horn (19). Allow sealant to cure. (Refer to step g.(8).)

i. Assemble pitch horn (19, figure 2-6) and grip (38), and install on yoke (1) as follows:

(1) Apply a coating of lubricant (item 26, table 1-1) to parts as follows:

(a) Outside diameter of excluder (35, figure 2-6) on retainer (36) in bore of grip (38).

(b) Inside diameter of journal end of yoke (1) that will mate with retainer (36) during reassembly.

(c) Inside diameter of seal (14) in pitch horn (19).

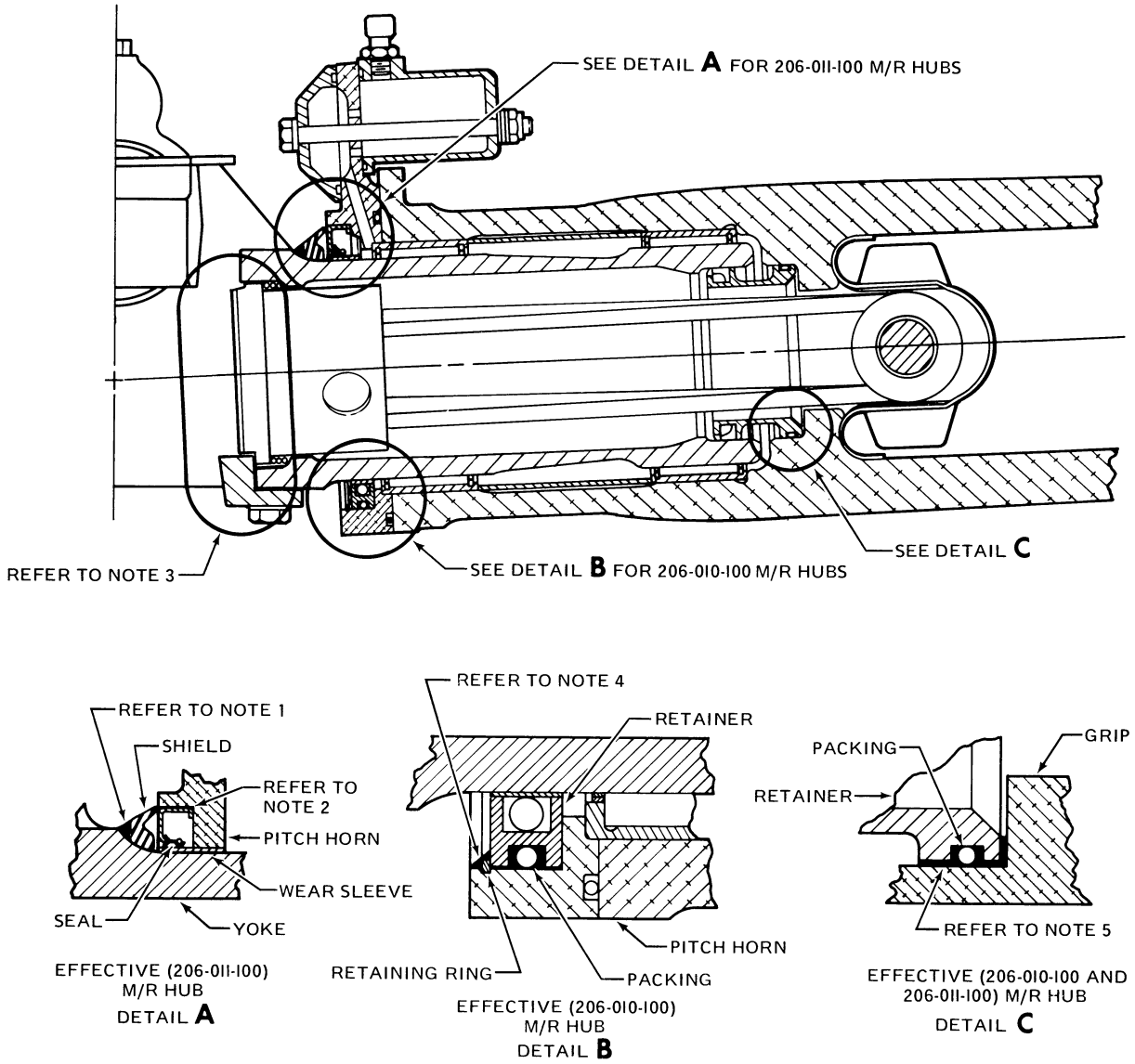

NOTES:

1. Apply a bead of sealant to yoke and shield.
2. Apply a thin film of sealant to outside diameter of seal and inside diameter of pitch horn.
3. Apply a bead of sealant around fillet radius of strap fitting and to adjacent mating surface of yoke. Ensure void between strap fitting and yoke is sealed. Do not allow sealant to contact ring or strap.
4. Apply a film of sealant to outside diameter of seal, inside diameter of pitch horn, and to retainer ring and packing.
5. Apply a coating of sealant to outboard groove of retainer, packing, and mating surface of grip bore.

206011-110A

Figure 2-7. Main Rotor Hub Grip Assembly – Sealant Application

(d) Packing (33).

(2) Install new packing (33) in groove on pitch horn (19). Position pitch horn to flange of grip (38) with pad for reservoir (25 or 64) up. Secure with bolts (27), washers (28), and nuts (50). Washers (28) are to be installed under bolt heads and nuts. Torque nuts (52) to 120 inch-pounds plus friction drag of nuts.

(3) Clean the following parts with naphtha (item 36), dry thoroughly, and apply a film of corrosion preventive compound (item 24) as follows:

(a) Inside diameter of holes in lug of grips (38, figure 2-6) for strap bolt (50).

(b) Inside diameter of holes in strap fittings (9) for pins (7). Also the outside diameter of the strap fittings but not the area to be sealed. (See figure 2-18, Note 3.)

(c) Inside and outside diameter of rings (8, figure 2-6) and mating area of the yoke (1).

(d) Inside diameter of holes in straps (10).

(e) Outside diameter of pins (7) and shanks of strap bolts (50).

CAUTION

Do not inter-mix (206-010-123-1 and -3) pins (7). For replacement use two (206-010-123-3) pins.

(4) Position ring (8) on strap fitting (9) and strap (10) in journal end of yoke (1). Insert strap in yoke with small hole in bonded bushing inboard. Install pin (7) through strap fitting (9) and strap (10). Pull strap outboard to seat strap fitting in yoke. Rotate strap fitting for alignment to static stop, reference step (6).

(5) Apply a bead of sealant (item 7) around exposed end of strap fitting (9, figure 2-6) and mating surface of yoke (1). Ensure strap fitting is fully seated in yoke and that void between yoke and strap fitting is filled with sealant. (See figure 2-7, Note 3.)

(6) Install static stop (3, figure 2-6), rubber stop (6), shims (2), washers (4), and bolts (5). Use shims as required to obtain 0.000 to 0.004 inch pinch fit between static stop and strap fitting (9). (See figure 2-19 item 12.) Torque bolts (5, figure 2-6) to 175 inch-pounds and recheck for required clearance. Do not safety bolts at this time for static stop must be aligned with mast after main rotor hub installation on helicopter.

Note

If hub is grease-lubricated, hand pack grip bearings (in bore) and coat yoke (1) spindles with grease (item 82) before installing grips (38).

(7) Carefully rotate grip (38) and pitch horn (19) on spindle of yoke (1). Continue rotating grip onto spindle engaging outboard end of strap (10) into lug in grip until holes for strap bolt (50) are aligned.

(8) Install strap bolt (50) from trailing edge side of grip (38) into lug of grip engaging strap (10) and aligning cutout on shoulder of strap bolt with locking pin (49). Clean threads of strap bolt (50) with naphtha (item 36) to remove corrosion preventive compound. Install washer (45, figure 2-6) and nut (44) on strap bolt (50). Torque nut (44) to 180 foot-pounds plus friction drag of nut using (T101554) socket wrench.

(9) Install spring (43), latch (39), and nut (40) on strap bolt (50). Do not torque nut (40) at this time. (Nuts are torqued when the main rotor blades are installed.) Loosely install cover (42) and cotter pin (41) on (206-010-100-3, -5, and -7) main rotor hubs.

j. Check closures (56) and buffer pads (48) on each grip (38) for voids or looseness. If voids are present or looseness is evident, repair or replace closures or buffer pads. (Refer to Section II, Overhaul, Part 1.)

CAUTION

Do not inter-mix blade bolts (53, figure 2-6), washers (47 and 51), and nuts (46). When installing (206-010-152-1) blade bolts, use (206-020-153-1) chamfered washers under bolt heads, and (206-010-154-1) washers under the the (206-011-119-1) nuts. When installing (206-010-153-3) blade bolts, use (206-010-153-1) chamfered washers under bolt heads, and (206-010-154-3) washers under the (206-011-119-1) nuts.

k. Apply a film of corrosion preventive compound (item 24) to shank of blade bolts (53, figure 2-6). Insert washers (51) on blade bolts with

chamfered side toward head of blade bolt and install in tangs of grip (38). Install washer (47) and nuts (46). Do not torque nuts (46) until main rotor blades are installed.

l. Oil lubricated hub.

(1) Fill bearing cavity of grips (38) at plug (21) or reservoir fitting (57) with lubricating oil (item 50). Work out all air bubbles and fill until sight glass (17 or 60, figure 2-6) is one half full. Reinstall reservoir plug or fitting and check main rotor hub for oil leaks.

m. Grease-lubricated hub.

(1) For grease-lubricated hub, refer to paragraph 2-36 .

n. Install main rotor blades. (Refer to paragraph 2-15 .)

2-10. REPLACEMENT OF GRIP SEALS — MAIN ROTOR HUB (206-011-100).

Note

If both grips are removed, identify parts for reinstallation on same side. Position main rotor hub on a work stand or bench to allow disassembly and layout of parts. The following procedure provides instructions for the removal, inspection, and installation of static stop, strap fitting, ring, pin, and strap. These parts do not require removal unless oil leakage or damage is evident.

1. Packing
2. Excluder
3. Retainer (current)
3A. Retainer (original)
4. Packing

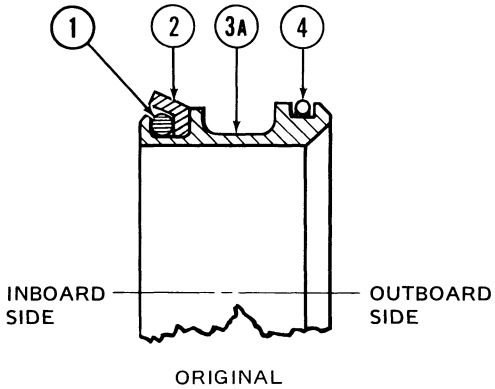

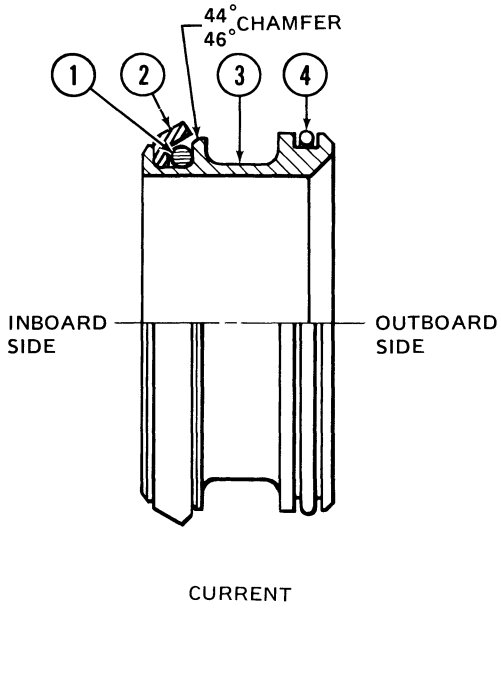

206011-150C
206-011-129-3

Figure 2-8. Main Rotor Seal (Outboard) Retainer Assembly

a. If installed, remove flap restraint kit (6, figure 2-1) and screws (5), or screws (44, figure 2-1, View C), and washer-spacer (45).

b. Remove nut (42, figure 2-9), washers (43 and 47), and blade bolt (49).

c. Remove and disassemble one or both grips (35) as follows:

(1) Remove nut (37) from leading edge side of grip (35) with blade latch (38) and spring (39). It is not necessary to remove nut (37), blade latch (38), and spring (39) from trailing edge side of grip.

(2) Remove nut (40) using (T101554) socket wrench. (See figure 1-13 for fabricating (T101554) socket wrench.) Remove washer (41, figure 2-9) and pull strap bolt (46) from grip (35).

(3) Remove nuts (48), washers (25), and bolts (24) from pitch horn (18 or 54) and grip (35). Pull grip outboard, separate pitch horn and drain lubricating oil into a suitable container (206-011-100-17 main rotor hub).

(4) Carefully remove grip (35) and pitch horn (18 or 54) from spindle of yoke (1). Do not allow hub weight to rest on shield (11). Discard packing (30).

(5) Cut and remove lockwire from bolts (5) at static stop (3). Remove bolts (5), washers (4), static stop (3), shims (2), and rubber stop (6).

(6) Push strap (10) inboard in yoke (1) to break sealant around strap fitting (9). Remove pin (7), strap fitting (9), ring (8), and strap (10) from yoke (1).

(7) Inspect strap (10) for deterioration of urethane rubber cover, bushing bond, and broken wires. If cover is deteriorated or a bushing bond is broken, replace strap. Maximum number of broken wires is 200, not to exceed 25 broken wires at any one of the eight corners. Inspect pin (7) strap fitting (9), and ring (8) for nicks, scratches, and wear.

(8) Insert a wooden dowel or aluminum tube (2.093 to 2.125 inches in diameter by 12 to 14 inches in length, see figure 1-13 for fabrication and use of work aid) into retainer (33, figure 2-9) in bore of grip (35). Rock work aid and retainer to break sealant bond. Remove work aid and retainer from grip. Remove excluder (32) and packings (31 and 34) from retainer (33). Discard excluder and packings.

(9) Inspect retainer (33), mating surfaces in bore of grip (35) and journal of yoke (1) for nicks, scratches, and excessive wear.

(10) Press seal (12) from pitch horn (18). Exercise caution to prevent damage to pitch horn and attaching parts. Discard seal.

(11) Trim sealant around shield (11) and remove shield from yoke (1).

d. Discard all packings, seals, washers, and self-locking type nuts.

e. Clean all parts with solvent (item 12, table 1-1). Remove sealant from parts with a plastic scraper and methyl-ethyl-ketone (item 17, table 1-1). Ensure all old sealant has been removed from all areas. (See figure 2-7 for sealant areas.)

f. Insect all parts for serviceability. If doubt exists as to the serviceability of any part, refer to Section II, Overhaul, Part 2, for detailed inspection, repair and replacement procedures.

g. Install retainer (33, figure 2-9) in grip (35) with new excluder (32) and new packings (31 and 34) as follows:

(1) Clean grooves in retainer (33) and mating surface area in bore of grip (35) with naphtha (item 36, table 1-1).

(2) Fabricate main rotor hub excluder mandrel work aid. (See figure 1-13).

(3) Insert small end of excluder mandrel into inboard side of retainer (33, figure 2-9). Lubricate packing (31), excluder (32) and tapered section of mandrel with grease (item 82). Position packing (31) on mandrel, followed by excluder (32) with lip pointing toward retainer (33). Slide excluder (32) and packing (31) over mandrel into retainer groove (see figure 2-8).

(4) Deleted.

(5) Apply a coating of sealant (item 7, table 1-1) to outboard groove of retainer (33 figure 2-9) and install new packing (34) in groove with sealant. Recoat packing and groove with sealant. (See figure 2-7, detail C.)

(6) Apply a film of sealant (item 7, table 1-1) to mating surface area in bore of grip (35, figure 2-9).

(7) Install retainer in grip (35) with packing (34) end first until fully seated in end of grip bore.

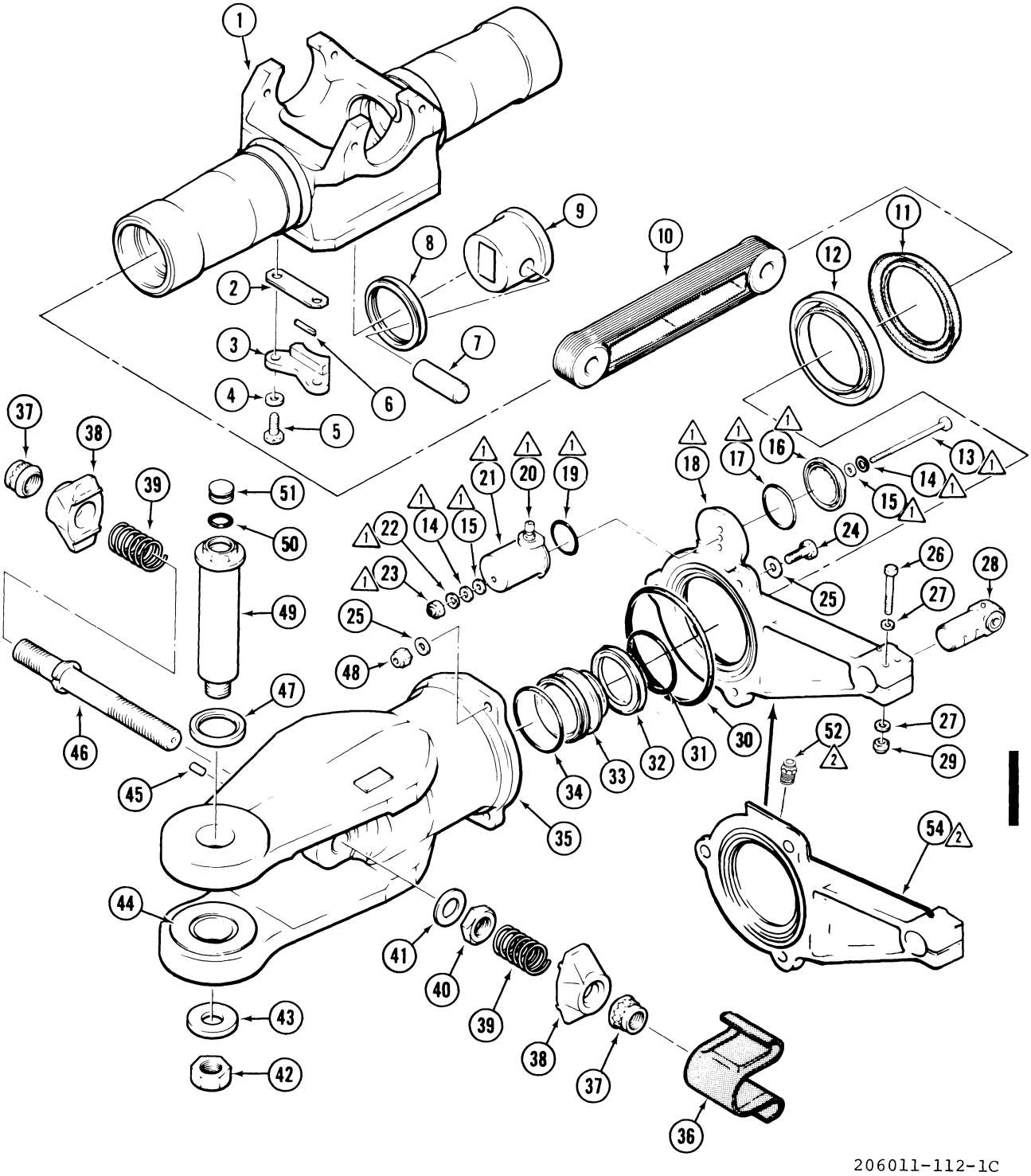

Figure 2-9. Main Rotor Hub (206-011-100) – Grip Repair (Sheet 1 of 2)

1. Yoke
2. Shim
3. Static Stop
4. Washer
5. Bolt
6. Rubber Stop
7. Pin
8. Ring
9. Strap Fitting
10. Strap
11. Shield
12. Seal
13. Bolt △1
14. Washer △1
15. Packing △1
16. Sight Glass △1
17. Packing △1
18. Pitch Horn △1
19. Packing △1
20. Reservoir Fitting △1
21. Reservoir △1
22. Spring Washer △1
23. Nut △1
24. Bolt
25. Washer
26. Bolt
27. Washer
28. Trunnion
29. Nut
30. Packing
31. Packing
32. Excluder
33. Retainer
34. Packing
35. Grip
36. Closure
37. Nut
38. Blade Latch
39. Spring
40. Nut
41. Washer
42. Nut
43. Washer
44. Buffer Pad
45. Pin
46. Strap Bolt
47. Washer
48. Nut
49. Blade Bolt
50. Packing
51. Cap
52. Relief Valve △2
53. Deleted
54. Pitch Horn △2

NOTES: △1 Used on 206-011-100-17 Main Rotor Hub.

△2 Used on 206-011-100-21 Main Rotor Hub.

206011-112-2C

Figure 2-9. Main Rotor Hub (206-011-100) – Grip Repair (Sheet 2 of 2)

CAUTION

During sealant cure do not heat grips (35) above 200°F (93°C). Damage to packings (31 and 34) and excluder (32) will occur.

(8) Cure sealant (item 7) for 72 hours at 70° to 80°F(21° to 27°C). Alternate cure is 1 hour at 70° to 80°F(21° to 27°C) plus 2 hours at 175°F(79°C).

h. Install new seal (12, figure 2-9) in pitch horn (18) as follows:

(1) Ensure cleanliness of all areas that are to receive sealant and all old sealant has been removed. (See figure 2-7 , detail A.) Final clean surfaces with naphtha (item 36).

(2) Apply a film of sealant (item 7) to inside diameter of pitch horn (18, figure 2-9) and outside diameter of seal (12).

(3) Carefully press seal (12) into inboard side of pitch horn (18 or 54) with lip of seal pointing outboard toward grip. (See figure 2-7 , detail A.)

(4) Allow sealant to cure (Refer to step g.(8).)

i. Install shield (11, figure 2-9) on spindle of yoke (1) as follows:

CAUTION

Do not allow weight of yoke to rest on shield. Turn yoke on its side before installation or install bolts in static stop threaded holes to support the yoke during assembly.

(1) Abrade shield (11) lightly in area to be bonded with No. 180 grit abrasive paper (item 15) and wipe with a cloth moistened with MEK (item 17). Wipe dry with a clean cloth. Clean bond area of yoke (1, figure 2-9) with MEK and wipe dry. Protect parts by covering with clean wrapping paper (item 98) if bonding cannot be accomplished immediately.

Note

Apply final sealant bead after grip (35) is installed and pulled fully outboard, otherwise, excessive gap may exist between shield and pitch horn.

(2) Apply a thin even coat of sealant (item 7) to mating surface of shield (11, figure 2-9) and yoke (1).

(3) Install shield (11) with lip facing outboard on yoke (1), press parts firmly together. Ensure shield is seated on yoke. (See figure 2-7 , detail A.) Fair sealant squeeze-out and air cure for a minimum of four hours.

j. Assemble pitch horn (18, figure 2-9), grip (35), and install on yoke (1) as follows:

(1) Apply a coating of lubricant (item 26) to the following parts.

(a) Outside diameter of excluder (32, figure 2-9) on retainer (33) in bore of grip (35).

(b) Inside diameter of journal end of yoke (1) that will mate with retainer (33) during reassembly.

(c) Inside diameter of seal (12) in pitch horn (18 or 54).

(d) Packing (30).

(2) Install new packing (30) in groove on pitch horn (18 or 54). Align pitch horn to grip (35) with pad for reservoir (21) up, and secure with bolts (24), washers (25), and nuts (48). Install bolts from pitch horn side with washers under each bolt head and nut. Torque nuts (48) to 120 inch-pounds plus friction drag of nuts.

(3) Thoroughly clean the following parts with naphtha (item 36), dry thoroughly, and then apply a film of corrosion preventive compound (item 24) as follows:

(a) Inside diameter of holes in lug of grip (35, figure 2-9) for strap bolt (46).

(b) Inside diameter of holes in strap fittings (9) for pin (7). Also outside diameter of strap fitting but not the inboard side that will be sealed. (See figure 2-7 , Note 3.)

(c) Inside and outside diameter of ring (8, figure 2-9) and mating area of the yoke (1).

(d) Inside diameter of holes in bushing end of the straps (10).

(e) Outside diameter of pin (7) and shank of strap bolt (46).

CAUTION

Do not inter-mix 206-010-123-1 and -3 pins (7). For replacement use two (206-010-123-3) pins.

(4) Position ring (8) on strap fitting (9), and strap (10) in journal end of yoke (1). Insert strap in yoke with small hole in bonded bushing inboard. Install pin (7) through strap fitting (9) and strap (10). Pull strap outboard to seat strap fitting in yoke. Rotate strap fitting for alignment to static stop, reference step (6).

(5) Apply a bead of sealant (item 7) around exposed end of strap fitting (9, figure 2-9) and mating surface of yoke (1). Ensure strap fitting is fully seated in yoke and that void between yoke and strap fitting is filled with sealant. (See figure 2-7 , Note 3.)

(6) Install static stop (3, figure 2-9), rubber stop (6), shims (2), washers (4), and bolts (5). Use shims as required to obtain a 0.000 to 0.004 inch pinch fit between static stop and strap fitting (9). (See figure 2-35 , item 12.) Torque bolts (5, figure 2-9) to 175 inch-pounds and recheck for required clearance. Do not safety bolts at this time. Static stop must be aligned with mast after main rotor hub is installed on helicopter.

CAUTION

Ensure spindles of yoke (1) and bearings in grip (35) are thoroughly oiled or greased, as required, before installing parts.

(7) Carefully rotate grip (35) and pitch horn (18 or 54) on spindle of yoke (1). Continue rotating grip onto spindle engaging outboard end of strap (10) into lug in grip until bolt holes for strap bolt (46) are aligned.

(8) Install strap bolt (46) from trailing edge side of grip (35) into lug on grip engaging strap (10) and aligning cutout on shoulder of strap bolt with locking pin (45). Clean threads of strap bolt (48) with naphtha (item 36) to remove corrosion preventive compound. Install washer (41, figure 2-9) and nut (40) on strap bolt (46). Torque nut (40) to 180 foot-pounds plus friction drag of nut using (T101554) socket wrench.

(9) Install springs (39), latches (38), and nuts (37) on strap bolts (46). Do not torque nuts (37) at this time. (Nuts are torqued when the main rotor blades are installed.)

k. Check closures (36) and buffer pads (44) on each grip (35) for voids or looseness. If voids are present or looseness is evident, repair or replace closures or buffer pads. (Refer to Section II, Overhaul, Part 2.)

CAUTION

Do not inter-mix blade bolts (49, figure 2-9). When installing blade bolts, use 206-010-153-1 chamfered washers under bolt heads, and 206-010-154-1 or -3 washers under the 206-011-119-1 nuts.

l. Pull grip (35) fully outboard to seat parts. Position shield (11) against pitch horn (18 or 54) and seat in place.

m. Apply a film of corrosion preventive compound (item 24) to shank of blade bolts (49, figure 2-9). Insert washers (47) on blade bolts with chamfered side toward head of blade bolt and install in tangs of grips (35). Install washers (43) and nuts (42). Do not torque nuts (42) until main rotor blades are installed.

n. Oil lubricated hub.

(1) Fill bearing cavity grips (35) at reservoir fitting (20) with lubricating oil (item 50) (206-011-100-17 main rotor hub). Work out all air bubbles and fill until sight glass (16, figure 2-9) is one-half full. Verify actual presence of oil in sight glass. Reinstall reservoir fitting (20) and check main rotor for oil leaks.

o. Grease lubricated hub.

(1) For grease lubricated hub, refer to paragraph 2-36.

p. Install main rotor blades. (Refer to paragraph 2-15.)

2-11. REPLACEMENT GRIP RESERVOIR PACKINGS — MAIN ROTOR HUB (206-010-100-3, 5, and -7, OIL LUBRICATED HUB.)

Note

For main rotor hub (206-010-100-9) grip reservoir packing replacement, refer to paragraph 2-12.

a. Pad reservoir (25, figure 2-6) and sight glass (17) to absorb oil when removing nut (23).

b. Remove nut (23), lockwasher (22), washer (24), stat-o-seal (16), reservoir (25), and packing (26). Then remove bolt (15), second stat-o-seal (16), sight glass (17), and packing (18). Remove plug (21) and packing (20). Discard all packings and stat-o-seals.

c. Thoroughly clean reservoir parts and mating surfaces on pitch horn (20) with solvent (item 12).

d. Inspect pitch horn (19, figure 2-6) and reservoir (25) for nicks, scratches, and damage. Inspect sight glass (17) for damage. Replace sight glass (17) if cracked, crazed, or discolored.

e. Coat new packings (18 and 26) with lubricant (item 26). Install new packings (18 and 26, figure 2-6) in groove in sight glass (17) and reservoir (25). Install a stat-o-seal (16) on bolt (15) and then insert bolt through sight glass and pitch horn (19) on inboard side. Position reservoir (25) on outboard side of pitch horn (19) onto bolt (15). Install a stat-o-seal (16), washer (24), lockwasher (22), and nut (23).

f. Tighten nut (23) on bolt (15) until lockwasher (22) is completely compressed, then back off one full turn (6 plus or minus 1 wrench flat).

g. Fill cavity of grips (38) and reservoir (25) with lubricating oil (item 50) at port for plug (21, figure 2-6). Work out all air bubbles and fill until sight glass (17) is one-half full. Install plug (21) with new packing (20). Safety plug (21) to head of bolt (15) with 0.032 inch lockwire (item 19).

2-12. REPLACEMENT GRIP RESERVOIR PACKING — MAIN ROTOR HUB (206-010-100-9 AND 206-011-100, OIL LUBRICATED HUB).

a. Pad reservoir (21, figure 2-9) and sight glass (16) to absorb oil when removing nut (23).

b. Remove nut (23), lockwasher (22), washer (14), packing (15), reservoir (21), and packing (19). Then remove bolt (13), packing (17), sight glass (16), packing (15), and washer (14) from pitch horn (18). Remove fitting (20) and discard all packings.

c. Thoroughly clean reservoir parts and mating surfaces on pitch horn (18 or 54) with solvent (item 12).

d. Inspect pitch horn (18, or 54, figure 2-9) and reservoir (21) for nicks, scratches, and damage. Inspect sight glass (16) for damage. Replace sight glass if cracked, crazed, or discolored (206-011-100-17 main rotor hub).

e. Coat new packings with lubricant (item 26). Install new packing (17 and 19, Figure 2-9) in groove in sight glass (16) and reservoir (21). Install washer (14) and packing (15) on bolt (13), then

insert bolt through sight glass (16) and pitch horn (18) from the inboard side. Ensure packings (15) are against sight glass (16) and reservoir (21) and that chamfered side washers (14) is against packings. Install reservoir (21) additional packing (15), washer (14), and lockwasher (22) with nut (23).

f. Tighten nut (23) until lockwasher (22) is completely compressed, then back off one full turn (6 plus or minus 1 wrench flat).

g. Fill bearing cavity of grips (35) at reservoir fitting (20) with lubricating oil (item 50) (206-011-100-17 main rotor hub). Work out all air bubbles and fill until sight glass (16, figure 2-9) is one-half full. Verify actual presence of oil in sight glass. Reinstall reservoir fitting (20) and check main rotor for oil leaks.

2-13. REPLACEMENT OF PILLOW BLOCK SEALS — TRUNNION (206-010-136).

Note

If replacement of sight glass packings (19, figure 2-10) is not required, delete steps applicable to sight glass removal and installation. However, removal of plugs (16) will facilitate removal and installation of pillow blocks (25).

a. If installed, remove flap restraint kit (6, figure 2-1) and screws (5), or screws (42, figure 2-1 , view B) and washer-spacer (43).

b. Remove sight glasses (21, figure 2-10) from pillow blocks (25) as follows:

(1) Remove plugs (16) and packings (17) from sight glass covers (18). Pad sight glasses (21) and pillow blocks (25) to absorb lubricating oil during disassembly.

(2) Remove screws (13), lockwashers (14), washers (15), and stat-o-seals (20) from pillow blocks (25). Separate covers (18) from sight glasses (21) and discard all packings and stat-o-seals.

c. Inspect surfaces of covers (18) and sight glasses (21), for nicks, scratches, and damage. Replace sight glasses (21) if cracked, crazed, or discolored.

d. Remove pillow blocks (25) from trunnion (3) as follows:

(1) Remove two nuts (29) and washers (28) from each side of yoke (27). Remove bolts (22), washers (23), bushings (24), or bushing (30, figure 2-10, view B), and slide pillow blocks (25) from trunnion (3).

(2) Remove trunnion (3) from yoke (27).

(3) Turn adjusting screws (4) to push thrust washers (5) out of trunnion (3). Remove adjusting screws by continuing to turn in same direction. Clean trunnion (3), screws (4), and washers (5) with methyl-ethyl-ketone (item 17). Inspect trunnion (3, figure 2-10) and thrust washers (5) for nicks and scratches.

(4) Remove retaining ring (7), glyd ring (11), retainer (9), and packings (8 and 10) from each pillow block (25). Inspect pillow blocks (25) and retainers (9) for nicks, scratches, and damage. Inspect teflon pads (26) for damage. Replace teflon pads if worn through or if severe fretting has occurred. (Refer to Section II, Overhaul, Part 1.) Avoid contamination of bearings (12, figure 2-10) in pillow blocks (25). Discard all packings.

e. Reassemble pillow blocks (25) to trunnion (3) as follows:

(1) Install retainer (9) in pillow blocks (25) with new packings (8 and 10) and glyd ring (11). Moisten packings with lubricating oil (item 50).

(2) Clean screws (4, figure 2-10) and mating threads in trunnion (3) with methyl-ethyl-ketone (item 17). Apply loctite adhesive to these screws in subsequent step h. to prevent their movement during normal operation. Assemble thrust washers (5, figure 2-10) and adjusting screws (4) in trunnion (3) with new packings (6). Moisten packings in lubricating oil (item 50).

(3) Insert trunnion (3, figure 2-10) in yoke (27) and install pillow blocks (25) on each end of trunnion and secure to yoke as follows:

(a) Reassemble pillow blocks (25) using washers (23) and bushing (24). Insert bushings (24) in pillow blocks (25) and install bolts (22). Plastic face of washers (23) must face inboard next to pillow block. Secure pillow blocks (25) to yoke (27) with washers (28) and nuts (29).

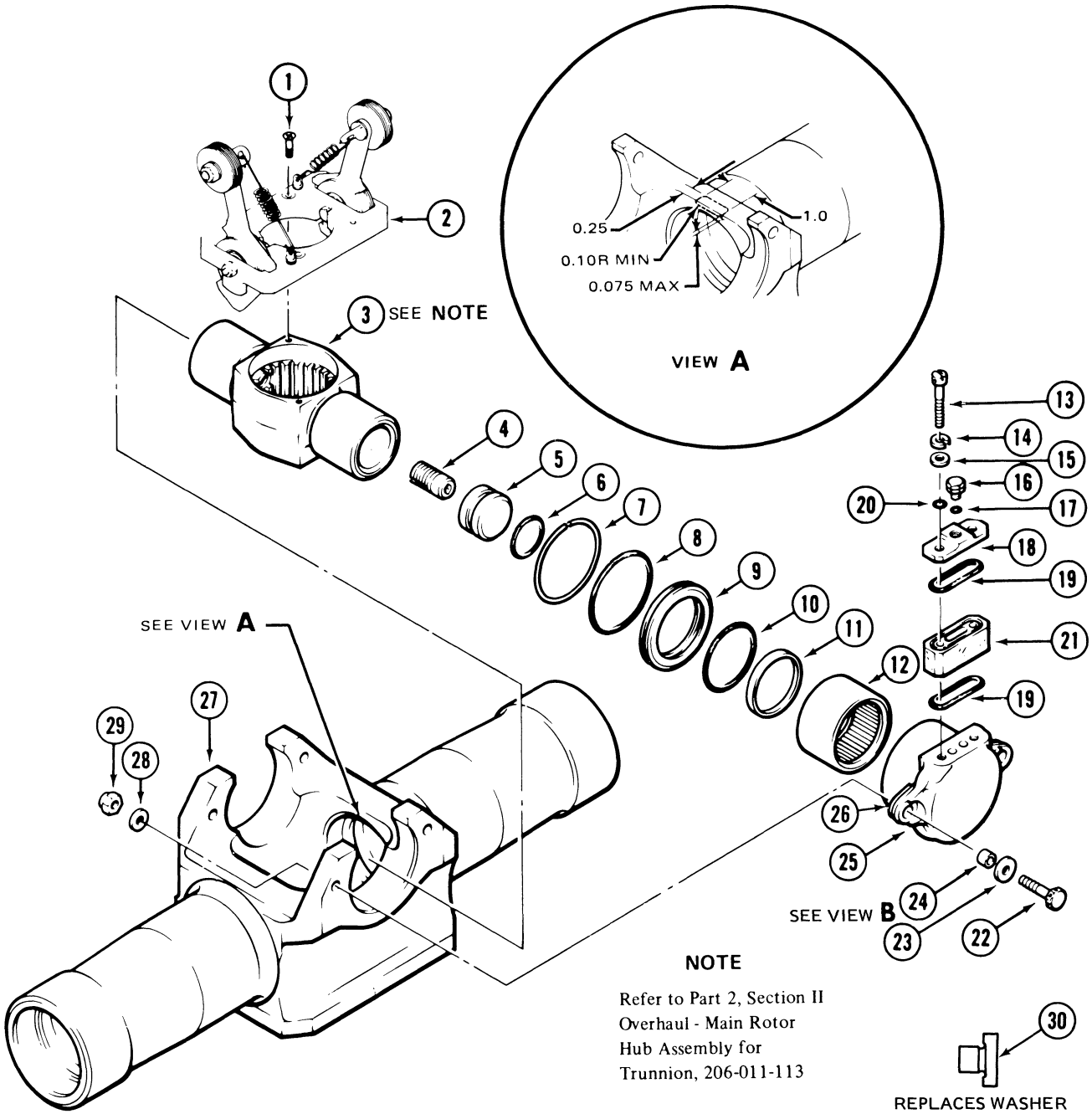

1. Screw
2. Flap Restraint Kit
3. Trunnion (206-010-136)
4. Screw
5. Thrust Washer
6. Packing
7. Retaining Ring
8. Packing
9. Retainer
10. Packing
11. Glyd Ring
12. Bearing
13. Screw
14. Lockwasher
15. Washer
16. Plug
17. Packing
18. Cover
19. Packing
20. Stat-O-Seal
21. Sight Glass
22. Bolt
23. Washer
24. Bushing
25. Pillow Block
26. Teflon Pad
27. Yoke
28. Washer
29. Nut
30. Bushing

Figure 2-10. Main Rotor Hub (206-010-136) Trunnion – Repair

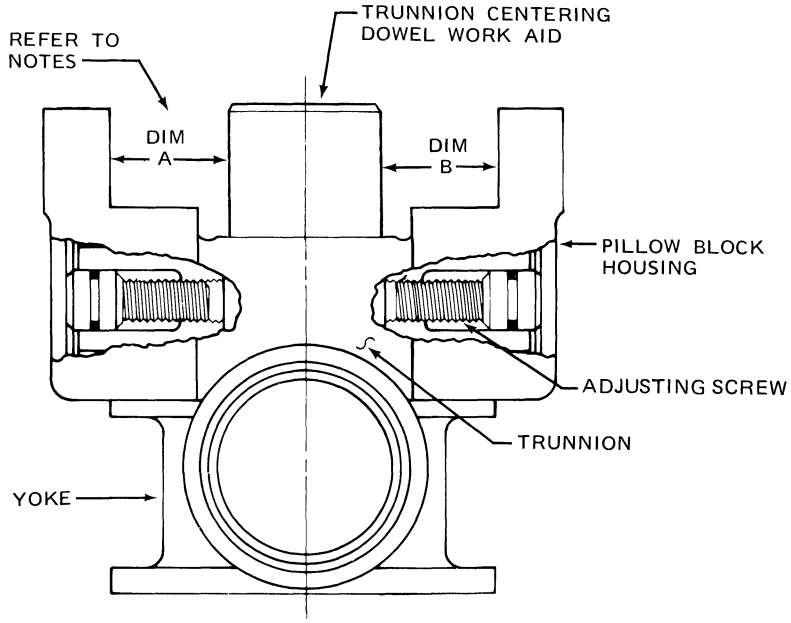

Notes:

1. Dim. = Dimension.
2. Dimensions A and B must be equal within 0.003 inch with the use of trunnion centering dowel.
3. Grips not shown to provide reference to trunnion.

206011-115A

Figure 2-10A. Trunnion centering — with grips installed

(b) Torque nuts (29) as follows:

Note

Retorque nuts 5 to 10 hours after installation and every 100 hours thereafter.

(1) NAS1304 bolt and NAS679 nut — 60 inch-pounds, plus tare.

(2) MS21250 bolt and MS21042 nut — 100 inch-pounds, plus tare.

CAUTION

Anytime a MS21250 bolt and/or EB-048 nut at an attachment joint is found loose (less than 150 inch-pounds), the bolt and nut may be retorqued. If low torque was greater than 50 inch-pounds, bolt may be retained in service, after retorque. If less than 50 inch-pounds, they may be retorqued, but must be replaced within the next 25 operating hours. Replace nuts when friction is less than 3.5 inch-pounds.

(3) MS21250 bolt and EB-048 nut — 150 inch-pounds, plus tare.

(b1) Paint 1/8 inch slippage marks across heads of bolts (22) to flange on pillow blocks (25) and from nuts (29) to flanges on yoke (27).

(c) Reassemble pillow blocks (25) using bushings (30, figure 2-10 , view B). Insert bushings (30) in pillow blocks (25) and secure to yoke (27) with washers (28) and nuts (29). Refer to step (b) for torque requirement.

f. Install sight glasses (21) on pillow blocks (25) as follows:

(1) Coat new packings (19) with lubricant (item 26). Insert in grooves in sight glasses (21, figure 2-10) and align with screw holes in pillow blocks (25).

(2) Position covers (18) on sight glass (21). Install stat-o-seals (20), against covers (18), washers (15), and lockwashers (14) under heads of screws (13).

(3) Torque screws (13) until lockwashers (14) are completely compressed, then back off one full turn. Safety heads of screws (13) to heads of bolts (22) with 0.032 inch lockwire (item 19).

g. Center trunnion (3, figure 2-10) on pitch change axis of yoke, (27) within 0.003 inch as follows:

(1) Position yoke on a surface plate. Insert trunnion centering dowel work aid into trunnion. Dowel must be line-to-line fit in trunnion with no more than 0.001 inch clearance. If dowel is a loose fit it is either undersize or splines of trunnion are worn. (Refer to Section I for fabrication of main rotor trunnion centering dowel.)

(2) Measure between inboard surface of pillow block and trunnion centering dowel and record as dimension A. (Refer to figure 2-10A) Measure opposite side and record as dimension B. Dimension A and B must be equal within 0.003 inch or less.

(3) Reposition trunnion, as necessary with adjusting screws to obtain equal readings at dimensions A and B within 0.003 inch or less. (Refer to figure 2-10A) Torque each adjusting screw 115 to 130 inch-pounds. Recheck trunnion centering after each adjustment.

(4) Remove trunnion centering dowel work aid. Torque screws (4, figure 2-10) equally 115 to 130 inch pounds. Reinstall trunnion centering dowel work aid and recheck trunnion centering after each adjustment in accordance with steps (1) through (3).

(5) After trunnion (3) is centered, apply primer, grade T (item 85) and sealant (item 38) to inboard ends of screws (4, figure 2-10A) and to threaded area of trunnion journal as follows:

CAUTION

Do not move screws (4).

(a) Clean heads of screws (4) and threads in journal of trunnion (3) by wiping surfaces with a cloth moistened with safety solvent (item 84).

(b) Apply a film of primer, grade T (item 85) with a cotton swab to heads of screws (4, figure 2-10) and threads in journal of trunnion (3). Allow 2 to 3 minutes flash off of the primer prior to sealant application.

(c) Apply a small amount of sealant (item 38) to heads of screws (4, figure 2-10) and thread area. The sealant will be drawn into thread area by capillary action, sealing screws in place. Complete sealing of screws is assured when a purple ring of sealant remains around screw heads. Allow sealant to cure at room temperature of 70° to 80°F(21° to 27°C) for 60 to 90 minutes.

h. Apply a film of corrosion preventive compound (item 24) to heads of screws (4, figure 2-10), threaded journal, and splines of trunnion (3). Seal heads of screws with a plug of sealant (item 7).

i. Fill pillow blocks (25, figure 2-10) bearing cavities with lubricating oil (item 50) and sight glasses (21, figure 2-10) through port for plug (16). Work out all air bubbles and refill until sight glasses (21) indicate one-half full. Verify actual presence of oil in sight glass. Install plugs (16) with new packings (17) and safety with 0.032 inch lockwire (item 19).

j. Reinstall flap restraint kit (6, figure 2-1) with screws (6) on trunnion (10). If flap restraint kit is not used, install washer-spacer (43, figure 2-1 , view B) and secure to trunnion (10) with screws (42).

2-14. REPLACEMENT OF PILLOW BLOCK SEALS — TRUNNION (206-011-113).

a. If installed, remove flap restraint (6, figure 2-1) and screws (5), or remove screws (44, figure 2-1 , view C) and washer-spacer (45) from trunnion (10).

b. Cut lockwire and remove filler plug (15, figure 2-11), packing (16), sight plug (18), and packing (17) from pillow blocks (7). Pad pillow blocks (7) to absorb lubricating oil during disassembly. Inspect sight plugs (18) for nicks, scratches, crazing, or discoloration. Replace sight plugs if cracked, crazed, or discolored.

c. Remove pillow blocks (7 or 22) from trunnion (9) as follows:

Note

Index mark pillow blocks (7 or 22) and trunnion (9) so that parts may be reinstalled in their original positions.

(1) Remove two nuts (5) and washers (4) from each pillow block (7 or 22). Remove bolts (1), washers (2), bushings (3) or bushing (19, figure 2-11, view A), and slide pillow blocks (7 or 22) from trunnion (9). To aid in the removal of pillow blocks (7 or 22) tapping with a soft faced mallet is acceptable.

(2) Remove trunnion (9) from yoke.

(3) Position filler plug end of pillow blocks (7 or 22) in a smooth faced vise and remove seals (13) using (T101491) puller. Discard seals. Avoid contamination of bearings (14) in pillow blocks (7 or 22).

WARNING

Methyl-Ethyl-Ketone is toxic and flammable. Use only in well ventilated area. Do not use near open flame.

(4) Turn screws (10), located in spindles of trunnion (9), to push thrust washers (11) out of trunnion. Remove screws (10) by continuing to turn in the same direction. Clean trunnion (9), screws (10), and thrust washers (11) with methyl-ethyl-ketone (item 17). Ensure sealant is

removed from threads of screws (10, figure 2-11) and journal of trunnion (9). Inspect inner race (8), trunnion (9), and thrust washers (11) for nicks and scratches.

(5) Inspect pillow blocks (7) for nicks, scratches, and damage. Inspect teflon pads (6) for damage. Replace teflon pads if worn through or if severe fretting has occurred. (Refer to Section II, Overhaul, Part 2.)

d. Reassemble pillow blocks (7 or 22, figure 2-11) to trunnion (9) as follows:

(1) Install screws (10) in journal end of trunnion (9). Apply corrosion preventive compound (item 24) to inside diameter of journal ends of trunnion ends, both sides.

(2) Coat new packings (12, figure 2-11) with lubricant (item 26) and install on thrust washer (11, figure 2-11 . Install thrust washer (11) in journal end of trunnion (9). Position trunnion in yoke.

Note

Locate index marks on pillow blocks (7 or 22) and trunnion (9). (Refer to step c.) Reinstall pillow block (7 or 22) and bearings (14) on the same side of trunnion as removed.

(3) Install bearings (14) in pillow blocks (7 or 22) if removed. Apply a thin film of sealant (item 7) to outside diameter of new seal (13, figure 2-11) and inside diameter of pillow block (7 or 22).

Note

Use 410351 seal for oil lubricated and 450351 seal for grease lubricated trunnions. On grease lubricated trunnions, hand pack bearings (14) with grease (item 82) prior to installation in pillow block (22) and coat trunnion splines (inner race).

(4) Apply a light coat of lubricant (item 26) to lip of seal (13, figure 2-11) and press seal in pillow block (7 or 22) with seal lip inboard for oil and outboard for grease.

(5) Install pillow blocks (7 or 22) on same side of trunnion (9) as removed, and secure to yoke as follows:

(a) Pillow blocks (7 or 22) using washers (2) and bushings (3). Insert bushings (3) in pillow blocks (7 or 22) and install bolts (1) with plastic face side of washers (2) inboard. Secure pillow blocks (7 or 22) with washers (4) and nuts (5).

(b) Pillow blocks (7 or 22) using bushings (19, figure 2-11): Insert bushings (19) in pillow blocks (7 or 22) and secure with bolts (1A), washers (2A), washers (4A), and nuts (5A).

(c) Torque nuts 5 or 5A as follows:

Note

Retorque nuts 5 to 10 hours after installation and every 100 hours thereafter.

1 NAS1304 bolt and NAS679 nut — 60 inch-pounds, plus tare.

2 MS21250 bolt and MS21042 nut — 100 inch-pounds, plus tare.

CAUTION

Anytime a MS21250 bolt and/or EB-048 nut at an attachment joint is found loose (less than 150 inch-pounds), the bolt and nut may be retorqued. If low torque was greater than 50 inch-pounds, bolt may be retained in service, after retorque. If less than 50 inch-pounds, they may be retorqued, but must be replaced within the next 25 operating hours. Replace nuts when friction is less than 3.5 inch-pounds.

3 MS21250 bolt and EB-048 nut — 150 inch-pounds, plus tare.

(d) Paint 1/8 inch slippage marks across heads of bolts (1 or 1A) to flange on pillow blocks (7 or 22) and from nuts (5 or 5A) to flanges on yoke.

e. On oil lubrication trunnions install sight plugs (18) and filler plugs (15) on pillow block (7) with new packings (17 and 16). Coat packings (17 and 16) with lubricant (item 26). Tighten sight plug (18, figure 2-11 only to standard torque, at this time.

f. Center trunnion (9) on pitch change axis within 0.003 inch adjusting screws (10) in accordance with paragraph 2-13 step g. and figure 2-10A .

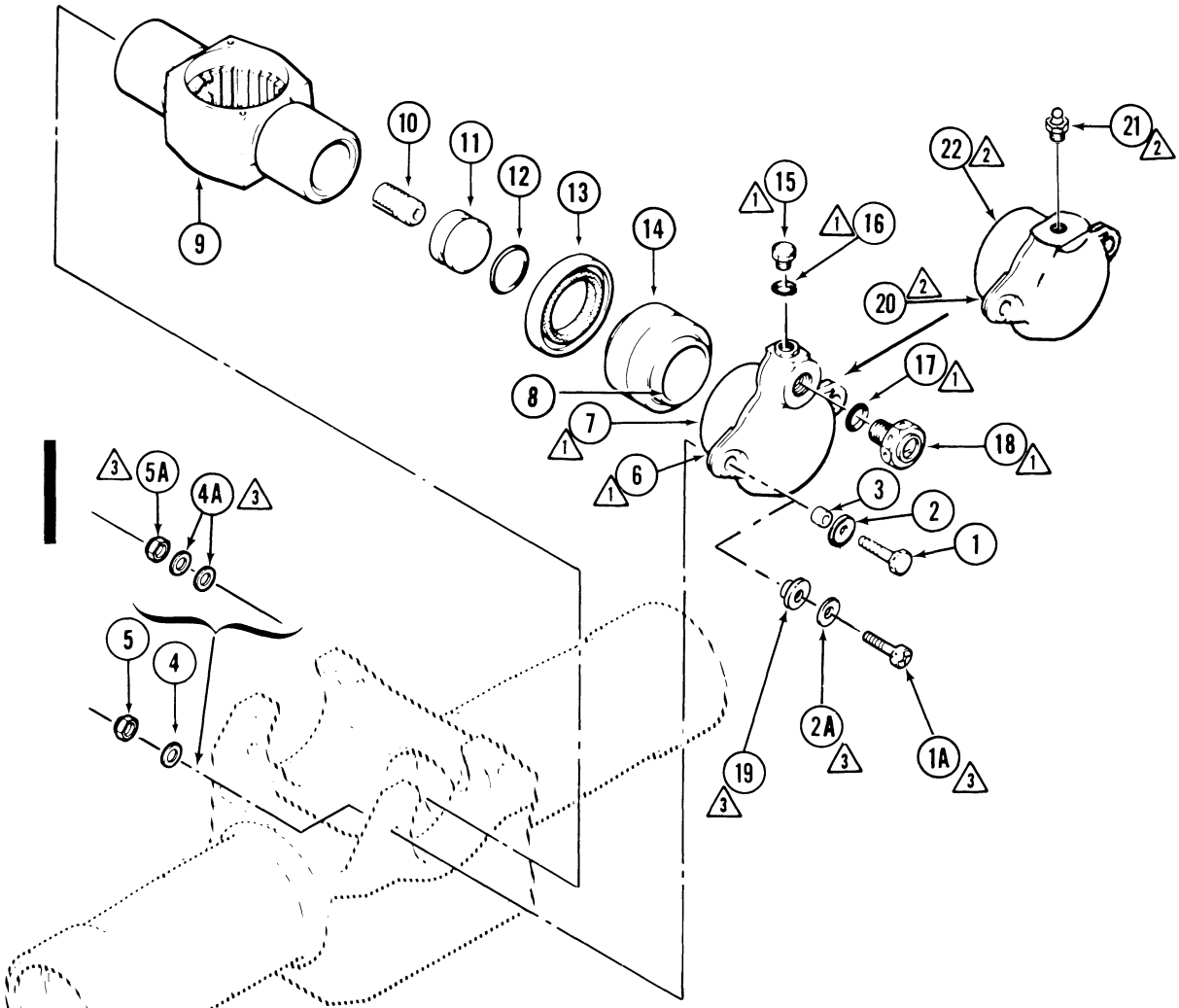

1. Bolt
1A. High Tensile Bolt △3
2. Washer
2A. Washer △3
3. Bushing
4. Washer
4A. Washer △3
5. Nut
5A. Nut △3
6. Pad △1
7. Pillow Block △1
8. Inner Race
9. Trunnion (206-011-113)
10. Screw
11. Thrust Washer
12. Packing
13. Seal
14. Bearings (2)
15. Filler Plug △1
16. Packing △1
17. Packing △1
18. Sight Plug △1
19. Bushing △3
20. Pad △2
21. Lubrication Fitting △2
22. Pillow Block △2

NOTES: △1 Used on 206-011-100-17 Main Rotor Hub.

△2 Used on 206-011-100-21 Main Rotor Hub.

△3 Used on MS21250-04014 High Tensile Bolts

206011-45E

Figure 2-11. Main Rotor Hub (206-011-113) Trunnion – Repair

f. Apply a film of corrosion preventive compound (item 24) to heads of screws (10, figure 2-11 .), threaded journal, and splines of trunnion (9).

g. For oil lubricated trunnions, remove filler plugs (15, figure 2-11) on pillow blocks (7) and fill bearing cavities with lubricating oil (item 50). Work out all air bubbles and fill to one-half full on sight plug (18, figure 2-11). Verify actual presence of oil in sight plug. Reinstall filler plug (15) and tighten to standard torque. Safety plugs (15 and 18) together with 0.032 inch lockwire (item 19).

h. For grease lubricated trunnions, lubricate pillow blocks (22) with grease (item 82) at lubrication fitting (21) to ensure bearings (14) are lubricated.

CAUTION

If washers are installed on pitch horn, loosen before lubricating grips.

i. Lubricate grip (72, figure 2-17) with grease (item 82) through lubrication fitting (71).

Note

Inject grease slowly so as not to displace end cap or seal.

j. Reinstall flap restraint kit (6, figure 2-1) with screws (5) on trunnion (10). If flap restraint kit is not used install spacer washer (45, figure 2-1 , view C) and secure to trunnion (10) with screws (44).

2-15. INSTALLATION — MAIN ROTOR BLADES.

a. Support hub on work stand.

b. Remove blade bolt (2, figure 2-1) from grip. Blade bolts must be color coded, identified, and replaced in the same grip with the same main rotor blade (34).

c. Loosen nut (40) on trailing edge side of hub and turn blade latch (36) to horizontal position.

CAUTION

Do NOT change the position of nuts (40) located on the leading edge side of hub if blade has been aligned.

Do NOT allow main rotor grips or yoke to rotate on pitch change axis. If grip or yoke is allowed to rotate on the pitch change axis beyond 90 degrees, the main rotor grip retention strap/s must be replaced. Secure main rotor blade grip through the pitch horn bearings to yoke with lockwire or suitable work aid.

d. Wipe bushings (32), retention bolt holes grips, and the recesses (I.D. edges of the buffer pads (30), and the edges of the bolt holes) in the inboard faces of the blade grip tangs with solvent (item 12).

e. Apply coating of corrosion preventive compound (item 24A) sufficient to fill the recesses (I.D. edges of buffer pads (30, figure 2-2) to bolt hole edges). Also apply corrosion preventive compound generously to the blade bolt bushing in grips, bushing (32), and shank of blade bolts (7).

CAUTION

Do not inter-mix blade bolts (7, figure 2-1). When installing blade bolts, use 206-010-153-1 chamfered washer under bolt head, and 206-010-154-1 or -3 washer under 206-011-119-1 nut.

f. Insert root end of main rotor blades (34) into grips with leading edge in direction of rotation. Support main rotor blades at pre-coned angle, align latches (36) and hole for blade bolts (7). Position washers (8) on blade bolts (7) with chamfered side toward bolt heads. Insert blade bolts (7) through grips, main rotor blades, and loosely install washers (28) and nuts (29). Remove corrosion preventive compound from threads on blade bolts before installing washers (28) and nuts (29).

g. Position latches (36) in vertical position and hold, torque nuts (40) to 75 to 95 foot-pounds.

h. Torque nut (29) on blade bolts (7) to 175 to 216 foot-pounds (274 to 340 foot-pounds for -127 and succeeding main rotor hubs). Coat bolt head, nut, and washer with corrosion preventive compound (item 24).

i. Secure pitch horn bearings to yoke with lockwire, or fabricated work aids to prevent grips from turning on yoke. (See figure 1-13 for fabrication instructions.)

j. Install opposite blade in same manner.

Note

If rotor blades have not been previously aligned, align blades in hub. (Refer to paragraph 2-16 .)

2-16. ALIGNMENT (STRING METHOD) — MAIN ROTOR BLADE.

CAUTION

Do NOT allow main rotor grips or yoke to rotate on pitch change axis. If grip or yoke is allowed to rotate on the pitch change axis beyond 90 degrees, the main rotor grip retention strap/s must be replaced. Secure main rotor blade grip through the pitch horns to yoke with lockwire or suitable work aid.

Note

The following procedure is applicable to both the (206-010-100 and 206-011-100) main rotor hub and blade assemblies.

a. Place the main rotor hub and blade assembly on a stable, level stand. The stand should be positioned directly beneath a hoist in a draft free room. The stand should have a steel top, or a piece of steel plate thick enough to resist flexing, fastened to the top of the stand. Support each main rotor blade at approximately the plane of the pre-coned angle, with two stands. Position stands about five feet inboard from the blade ends. Use padded stands or stands suitable for use with wheeled supports described in following note. Relative height of center support stand and outboard blade support stands will depend on the size of wheeled adapters used and the size of parallel supports used in step d.

Note

Blade alignment may be more easily accomplished by use of wheeled supports between rotor blades and blade support stands. Wheeled supports will permit the blades to move forward and aft on support stands when sweep adjustments are made during blade alignment. Roller skates may be used for wheeled supports. (See figure 2-12). Remove toe and heel attaching clamps from roller skates. Remove adjusting bolt from center of skates and substitute an eye bolt with the eye up. The eye bolt should extend about one inch above the skate. Fabricate two padded blocks to fit the lower airfoil surface of the rotor blade. The blocks may be made from 2 x 3 inch hardwood slightly longer than the chordwise dimension of the main rotor blade. Shape the blocks so that the 3 inch wide plane will fit the lower surface of the blade. Fasten felt padding to the blocks to prevent blade damage. Make brackets to adapt the blocks to the roller skate eye bolts. Use two pieces of 1 inch angle for each block. Fasten brackets to lower surface of blocks about 3 inches aft of forward end so that bracket will support block and blade beneath blade pitch change rotation axis. Position brackets so that bolt which adapts brackets to skate eye bolts will act as a hinge or pivot point for rotor blade pitch change movement. Drill holes in brackets to accept bolt of same size as hole in eye bolt. Attach brackets to blocks with wood screws. Attach blocks to skate eye bolts with bolts.

b. Remove flap restraint kit from main rotor hub trunnion. (Refer to paragraph 2-24.)

c. Attach sling and raise main rotor assembly about 1 foot. (Refer to note ir paragraph 2-4 for sling fabrication and installation instructions.) Place base (8, figure 2-13) on mandrel (11) and insert through main rotor hub trunnion from lower side. Place plug (4) on mandrel and secure with screw (2) and washer (3). Position base (8) at right angle to main rotor blades.

d. Place two parallel supports on stand beneath main rotor. Supports may be aluminum bars approximately 2 x 3 x 12 inches long or suitable substitute. Lower main rotor until base (8) installed in subparagraph c, rests on supports.

e. Install locks (6, figure 2-13) and adjusters (7) on base (8) with screws (10) and washers (9). Secure locks to rotor blade pitch horns with pins (5).

f. Place bubble protractor on main rotor trunnion. Adjust, as required, to level. Tighten set screw. Adjust locks (6) to set both main rotor blade grips to 0 degrees pitch angle with the hub trunnion. Set bubble protractor on grip blade bolt boss while adjusting grips to 0 degrees pitch angle.

Note

If special tools specified in preceding steps are not available, allow main rotor hub to rest on stand and use machinist's jacks or other means to position rotor blade grips to zero pitch angle.

g. Remove caps (55, figure 2-6) from each main rotor blade bolts (53). Locate drive screw (1, figure 2-14) on upper surface of main rotor blades at tip end about 3 inches aft of leading edge. Attach a thin nylon cord (fish line) between the alignment pins (drive screws) at tip of each blade. Draw the line taut and secure in place with masking tape (item 75, table 1-1).

h. Check that each blade grip is on 0 degrees pitch angle in relation to the trunnion. (Refer to subparagraph f.)

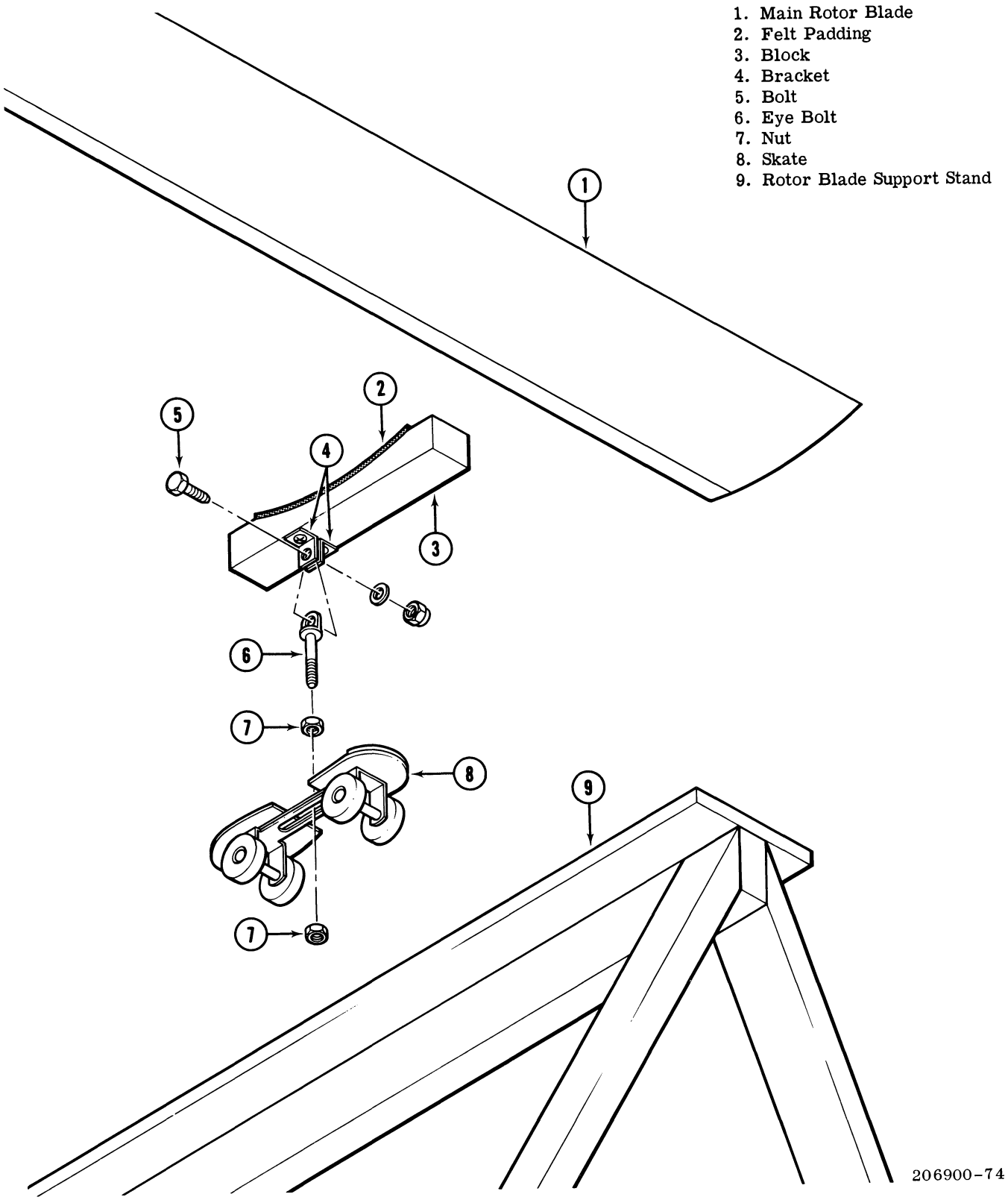

Figure 2-12. Main Rotor Blade Wheeled Support

1. Bulls Eye Level (810550)
2. Screw (NAS1351-6-16)
3. Washer (AN960-616)
4. Plug (T101576-15)
5. Pin (MS20392-4C53)
6. Lock (T101544-7)
7. Adjuster (T101544-9)
8. Base (T101576-13)
9. Washer (AN960PD416)
10. Screw (NAS1351-4-16)
11. Mandrel (T101576-3)
12. Stand Assembly (T101576-7)
13. Screw (NAS1351-4-16), (Part of Stand Assembly 12.)
14. Plate (T101576-19), (For Placement of Bulls Eye Level)

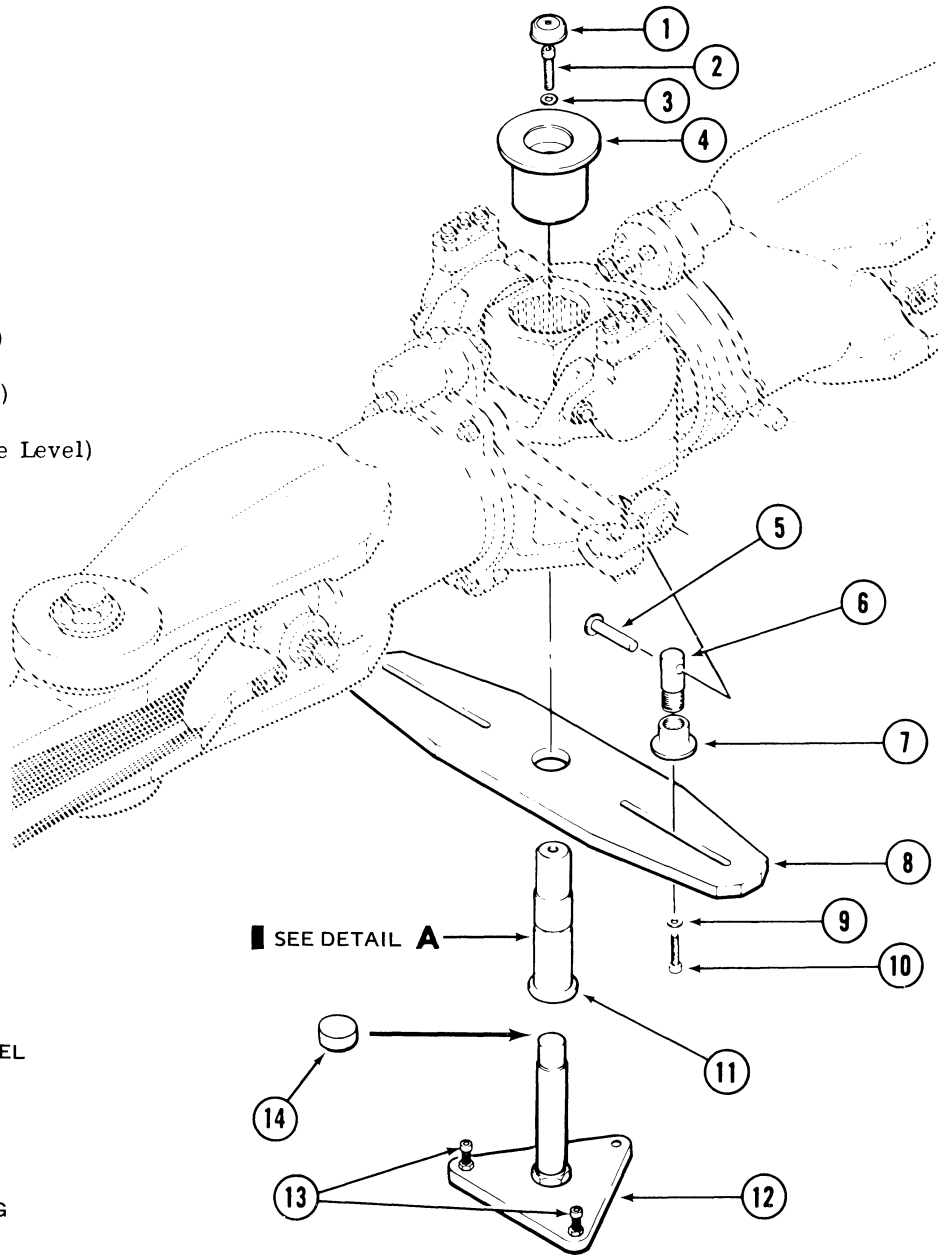

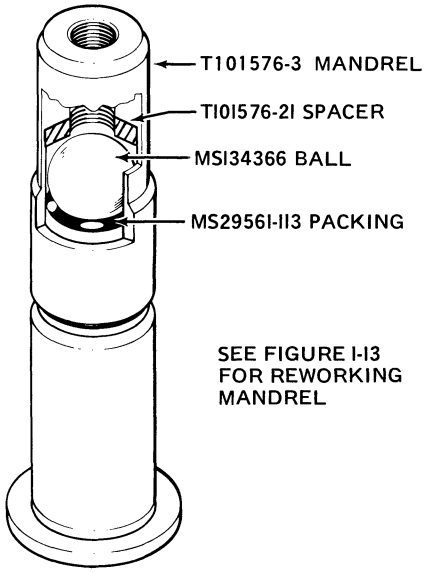

DETAIL A

NOTE

Tool T101522 was replaced by Tools T101543 and T101544

Tool T101543 was replaced by Tool T101576

Tools T101544 and T101576 must be used in conjunction with each other

(See figure 1-12 for special tools.)

206900-156B

Figure 2-13. Main Rotor Balancing – Tool Application

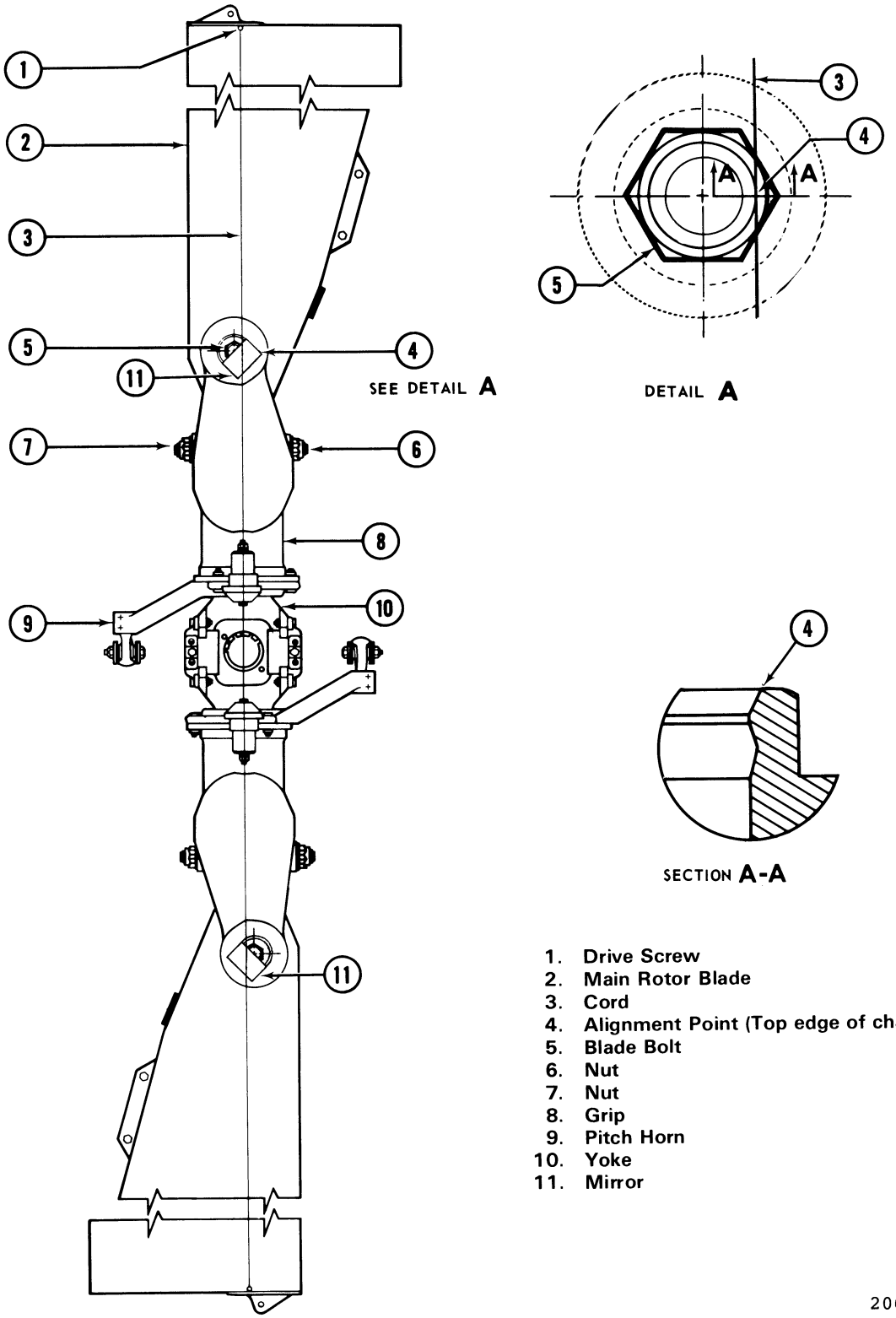

1. Drive Screw
2. Main Rotor Blade
3. Cord
4. Alignment Point (Top edge of chamfer)
5. Blade Bolt
6. Nut
7. Nut
8. Grip
9. Pitch Horn
10. Yoke
11. Mirror

Figure 2-14. Main Rotor Blade Alignment (String Method)

i. Remove cover (42, figure 2-6) from nuts (40). Adjust nuts (6 and 7, figure 2-14) to sweep blades, as required, to locate cord over blade bolts hole, as shown in figure 2-14 , detail A. Loosen nut (44, figure 2-6) on blade being swept to prevent binding.

j. To determine the vertical position of the cord in relation to the blade bolt use two small mirrors (11). Lay the mirrors across the open top flange of the blade bolts (4). (See figure 2-14) With one eye, view the cord, the mirror image of the cord, and the alignment point on the blade bolt. When all three reference points are aligned, at both blade bolts, the main rotor blades are aligned. Ensure that the blades are not binding on the outer support stands when blade sweep adjustments are made. If wheeled supports are used, binding should not occur. If wheeled supports are not used, raise blade tip to clear outboard support stand and lower vertically each time a sweep adjustment is made.

k. Determine drag of nuts (6 and 7, figure 2-14) and torque nuts to 75 to 95 foot-pounds plus friction drag of nuts. If blades are to be balanced immediately, do not torque nuts (6 and 7) or install covers (42, figure 2-6) and cotter pin (41), if applicable, at this time.

l. Determine drag of blade bolt nuts (46) and torque nuts to 175 to 216 foot-pounds (270 to 340 foot-pounds for -127 and succeeding main rotor hubs) plus friction drag of nuts. If blades are to be balanced immediately, do not torque nuts, (46) at this time.

m. Balance the main rotor assembly. (Refer to paragraph 2-17) Leave balancing tools installed in main rotor hub.

2-16A. ALIGNMENT (SCOPE METHOD) — MAIN ROTOR HUB AND BLADE ASSEMBLY.

TOOLS REQUIRED

T100220	Sling
T101401	Scope assembly
T101532	Support assembly
T101576	Balance set
Fgure 2-14B	T Handle
Figure 2-12	Blade support

CAUTION

Do NOT allow main rotor grips or yoke to rotate on pitch change axis. If grip or yoke is allowed to rotate on the pitch change axis beyond 90 degrees, the main rotor grip retention straps must be replaced. Secure main rotor blades grip through the pitch horns to yoke with lockwire or suitable work aid.

a. Ensure that T-handle work aids are installed through the pitch horn trunnion bearings and yoke. (Refer to figure 2-14B for T-handle work aid.)

Note

The following procedure is applicable to both the 206-010-100 and 206-011-100 main rotor hub and blade assemblies. On main rotor hub assemblies with trunnion 206-011-120, adapter T101532-9 must be used.

b. Remove flap restraint from main rotor hub and blade assembly (8). (Refer to paragraph 2-24)

c. Position main rotor hub and blade (9, figure 2-14A) on a stable, level stand. The stand should be positioned directly beneath a hoist in a draft free room. Stand should have a steel top, or a piece of steel plate thick enough to resist flexing, fastened to its top.

d. Support each main rotor blade at approximately the plane of the preconed angle with two main rotor blade support stands (9, figure 2-12). Position main rotor blade support stands (9) about five feet inboard from the main rotor blade tips. Use padded support stands or stands suitable for use with wheeled supports.

Note

Blade alignment may be more easily accomplished by use of wheeled supports between rotor blades and blade support stands. Wheeled supports will permit the blades to move forward and aft on support stands when sweep adjustments are made during blade alignment. (Refer to figure 2-12).

e. Attach a T100220 sling and raise main rotor hub and blade assembly about one foot.

f. Place base (17, figure 2-14A) on mandrel (20) and insert through main rotor hub trunnion, from lower side. Place plug (13) on mandrel (20) and secure with screw (11) and washer (12). Orient base (17) at right angle to main rotor blades.

g. Place two fabricated parallel supports on stand beneath main rotor hub yoke. Supports may be fabricated from aluminum bar stock approximately 2 by 3 by 12 inches long or other suitable substitutes. Lower main rotor hub and blade until base (17) rests on supports.

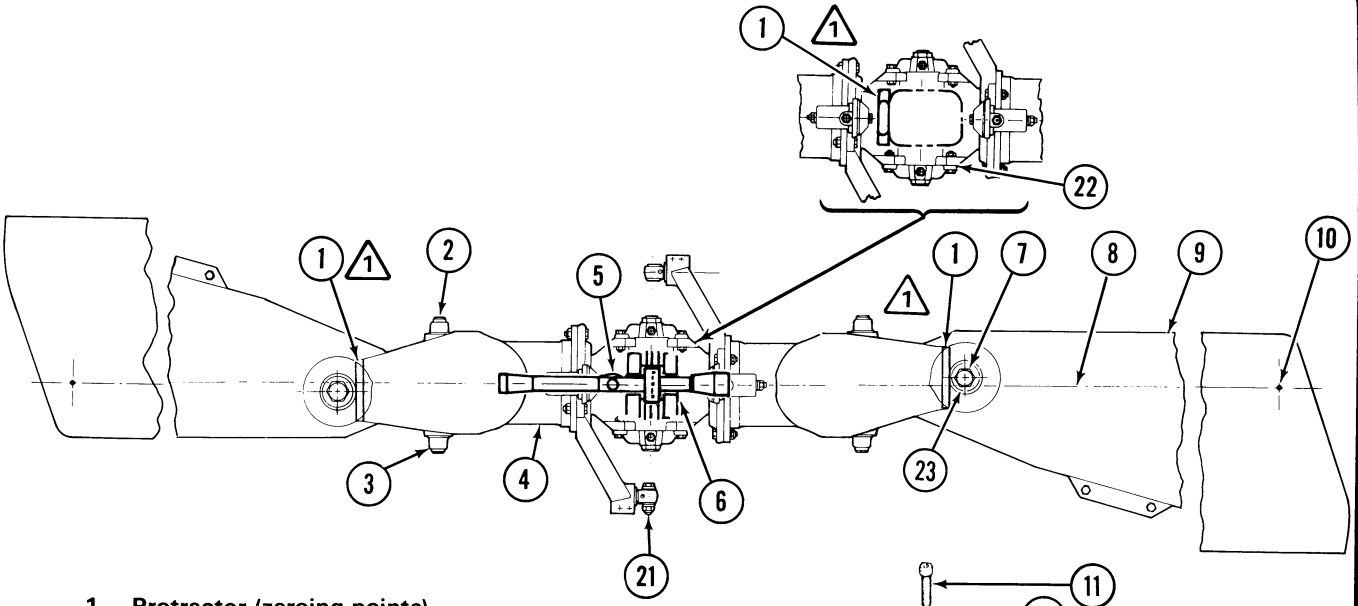

1. Protractor (zeroing points)
2. Trailing edge nut
3. Leading edge nut
4. Grip
5. T101401 scope assembly
6. T101532 support assembly
7. Blade bolt
8. Pitch change axis
9. Main rotor hub and blade
10. Drive screw (alignment point)
11. Screw
12. Washer
13. Plug
14. Pin
15. Lock
16. Adjuster
17. Base
18. Washer
19. Screw
20. Mandrel
21. Bearings
22. Yoke
23. Cap

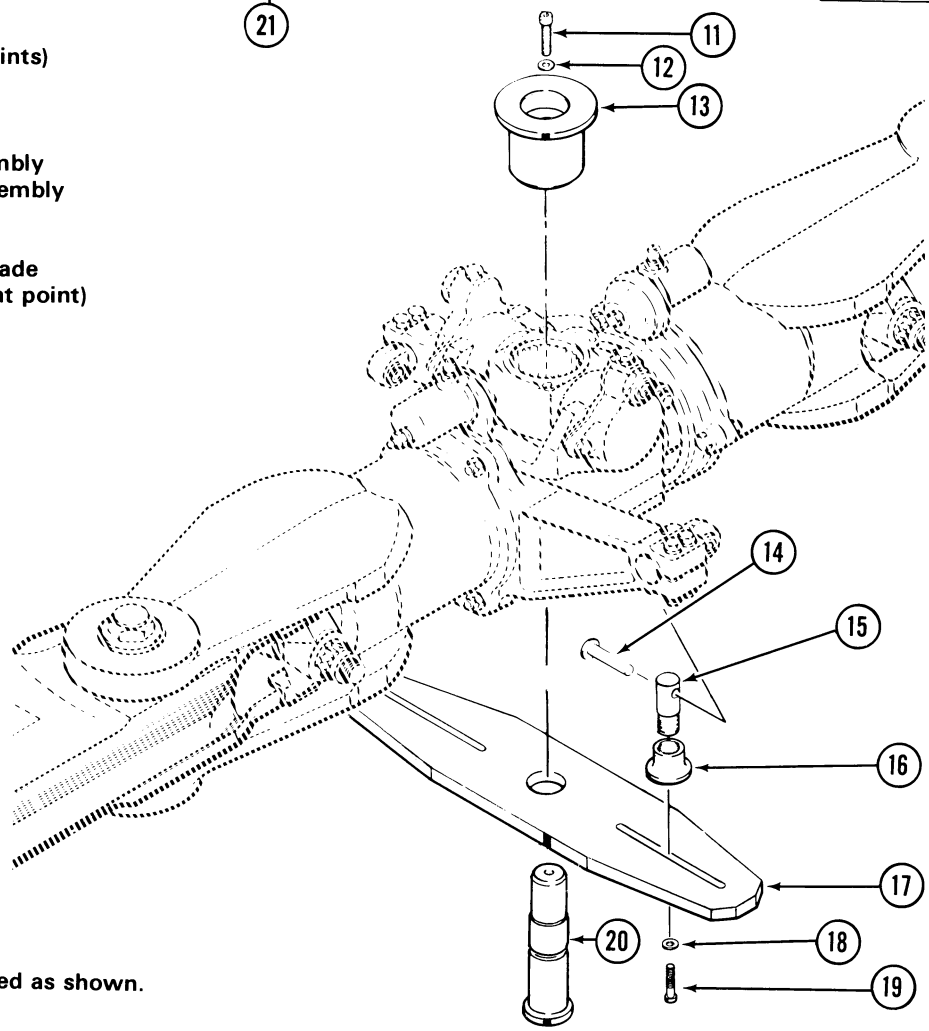

NOTE:

1 Protractor must be aligned as shown.

L206011-93A

Figure 2-14A. Main Rotor Blade Alignment (Scope Method)

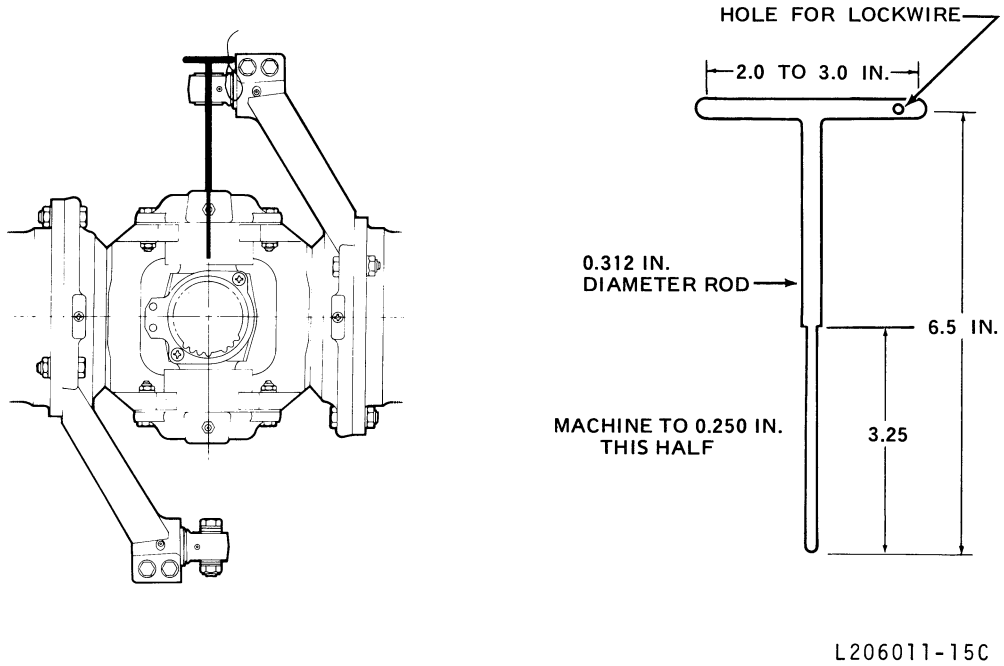

Figure 2-14B. T-handle Work Aid

h. Install locks (15) and adjusters (16) on base (17) with screws (19) and washers (18). Secure locks (15) with pins (14) to bearings (21).

i. Place a bubble protractor on flat surface of yoke (22) as shown on figure 2-14A. Set protractor bubble to level, and tighten set screw. Reposition zeroed bubble protractor to flat machined surface on one grip (4) adjacent to blade bolt (7). Adjust locks (6, figure 2-13) to set grip (4, figure 2-14A) to 0 degrees pitch angle. Repeat procedure on opposite grip.

Note

If tool requirements specified in preceding steps f., g., and i., are not available, allow main rotor hub and blade to rest on stand and use machinist's jacks or other means to position main rotor blade grips to 0 degrees pitch angle.

j. Position T101532 support assembly (6, figure 2-14A) and place T101401 scope assembly (5) in support as shown in figure 2-14A.

k. Check scope for zero adjustment as follows:

(1) Sight through scope at a surface approximately 50 feet away.

(2) Draw a straight vertical mark on surface aligned with vertical crosshair.

(3) Loosen clamp screws on scope mount, rotate scope 180 degrees on tube axis, and tighten screws.

(4) Take another sight to check that vertical crosshair aligns with target line previously marked in step (2).

(5) If vertical crosshair fails to align on target mark, adjust scope as follows:

1. Make a second vertical mark at new alignment of vertical crosshair.

2. Make a third vertical mark midway between first and second vertical marks.

3. Adjust scope by turning screw marked L on side of scope to align vertical crosshair on third vertical mark.

4. Loosen clamp screw on scope mount, rotate scope 180 degrees on tube axis, check that vertical crosshair aligns with target mark. Repeat procedure until alignment is satisfactory.

l. Locate drive screw (10) on upper surface of main rotor blade at tip end and about three inches aft of leading edge.

Note

Ensure that each grip is positioned at zero degree pitch angle in relation to yoke. Refer to step i.

m. Sight through scope to blade, drive screw (10), on surface of either blade. Center of screw head (10) should align on vertical crosshair within 0.1 inch forward and 0.4 inch aft.

n. Reverse scope (5) on support (6). Repeat step m. to check alignment on opposite blade. Blade to blade difference must not exceed 0.050 inch.

Note

Ensure main rotor blades are not binding on the outer support stands when making blade sweep adjustment. If wheeled supports are not used, raise blade tip to clear outboard support stands and lower vertically each time sweep adjustments are made.

o. If main rotor blades are not aligned as described in steps m. and n., loosen nuts on blade bolts. Adjust leading or trailing edge nuts (2 and 3) by loosening one nut and tightening the other until main rotor blades are aligned.

Note

If blades are to be balanced immediately, do not torque blade bolt (7) and trailing and leading edge nuts (2 and 3).

p. Torque trailing and leading edge bolt nuts (2 and 3) 75 to 95 foot-pounds.

q. Torque blade bolt nuts (46, figure 2-6) 175 to 216 foot pounds (274 to 340 foot-pounds for -127 and succeeding main rotor hubs).

r. When blade alignment is complete, remove scope assembly (5, figure 2-14A) and support assembly (6).

s. Balance the main rotor hub and blade assembly. (Refer to paragraph 2-17.)

2-16B. STATIC BALANCING — MAIN ROTOR HUB AND BLADE. Using Bell Helicopter Textron Tools.

TOOLS REQUIRED

T100220	Sling
T101544	Adapter Set
T101576	Balance Set

CAUTION

Do NOT allow main rotor grips or yoke to rotate on pitch change axis. If grip or yoke is allowed to rotate on the pitch change axis beyond 90 degrees, the main rotor grip retention strap/s must be replaced. Secure main rotor blade grip through the pitch horns to yoke with lockwire or suitable work aid.

Note

Main rotor hub and blade static balance must be accomplished in a draft free area with T101544 adapter set and T101576 balance set. (Refer to figure 2-13) Balancing is required after alignment.

a. Align main rotor hub and blade. (Refer to paragraph 2-16)

b. Place stand assembly (12, figure 2-13) on level reinforced work stand or table.

Note

The main rotor hub and blade must be removed from stand assembly (12) each time sweep adjustments are made. It is advisable to drill three small holes about one-eighth inch deep in the metal covered table to accommodate the three legs of the stand assembly. The three legs of the stand would act as dowels and prevent shifting of stand assembly and possible change in level when the main rotor is removed for sweep adjustments.

c. Index position of stand assembly (12) to work stand or table. Position plate (14) on stand assembly (12). Then place bulls eye level (1) on plate (14) and adjust screws (13) and nuts to achieve a level condition. Remove bulls eye level (1) and plate (14).

Note

Do not allow stand assembly to move in relation to supporting work stand or table during static balancing procedure.

d. Check mandrel assembly (11) to ensure that ball and O-ring are installed on balance base (8) as follows:

CAUTION

Carefully place mandrel assembly on stand assembly to prevent damage to ball and/or stand assembly.

(1) Place base (8) on mandrel assembly (11) and carefully install components on stand assembly (12).

(2) Place plug (4) on mandrel assembly (11); do not install screw (2) and washer (3).

(3) Place bulls eye level (1) in recess on top of plug (4) and check balance of components.

(4) If components are in balance, index mark the following with a pencil or ink.

(a) Bulls eye level (1).

(b) Plug (4).

(c) Base (8).

(d) Mandrel assembly (11).

(e) Stand assembly (12).

(5) If components are out of balance, lay small washers and a small piece of masking tape on top surface of base (8). Attach the small washers with masking tape and move to top surface of base to attain balance. When components are balanced, attach washer(s) to the same relative position on lower surface on base (8). Verify correct balance and index mark components in accordance with step (4).

(6) Remove bulls eye level (1), plug (4), base (8), and mandrel assembly (11) from stand assembly (12). Ensure index marks are still visible.

e. Attach T100220 lifting sling through tangs of both main rotor grip assemblies and raise approximately one foot above stand assembly (12). Insert base (8) and mandrel assembly through main rotor hub trunnion from lower side, orienting arms of base (8) at right angles to main rotor blades. Place plug (4) in trunnion and secure with screw (2) and washer (3). Carefully lower main rotor hub and blade and mandrel assembly (11) onto the stand assembly (12).

f. Place pins (5) through pitch change bearings and install locks (6), and adjusters (7).

g. Place a bubble type adjustable protractor on machined chordwise surface of main rotor hub yoke. Adjust protractor to center and lock.

h. Transfer protractor to the outboard machined surface of one main rotor blade grip adjacent to blade bolt. Screw adjuster (7) on lock (6) until protractor is centered. Secure lock (6) and adjuster (7) to base (8) with screw (10) and washer (9). Transfer protractor to opposite main rotor blade grip and repeat procedure.

j. Verify that main rotor hub is serviced with grease or oil, as applicable.

k. Place bulls eye level (1) in recess on top of plug (4). Check and align index marks applied to components (1, 4, 8, 11 and 12) in accordance with step d.(4).

CAUTION

DO NOT make sweep adjustments with main rotor hub and blade assembly resting on stand assembly. Damage to stand assembly may result.

l. Check chordwise balance. Correct chordwise imbalance by sweeping one main rotor blade aft. Do not sweep main rotor blades forward.

Note

Main rotor blade sweep adjustments are sensitive. Loosen leading edge nut (3, figure 2-14A) on blade latch bolts and tighten trailing edge nut (2) an equal amount. Do not exceed a maximum of three points on nuts (2 and 3). Index mark nuts (2 and 3) and blade latches with pencil or ink mark before making adjustments.

m. Raise main rotor hub and blade clear of stand assembly (12, figure 2-13). Loosen nuts on blade bolts (7, figure 2-14A) that is to be swept and make sweep adjustment. (Refer to preceding NOTE.).

n. Carefully lower main rotor hub and blade on stand assembly (12, figure 2-13) and recheck chordwise balance. Repeat the preceding steps e. and f., as required, until main rotor hub and blade assembly is balanced chordwise.

o. After obtaining chordwise balance, raise main rotor hub and blade clear of stand assembly (12). Torque nuts (2 and 3, figure 2-14A) 75 to 95 foot-pounds. Torque blade bolt (7) 175 to 216 foot-pounds.

p. Carefully lower main rotor hub and blade on stand assembly (12, figure 2-13) and balance spanwise as follows:

(1) Cut lockwire and remove cap (23, figure 2-14A) with packing from blade bolts (7).

(2) Inspect interior of both blade bolts (7) for presence of lead weights. Remove all weight present, with mechanical fingers, if installed.

(3) Add lead weights to hollow shank of high blade bolt (7), as required, until spanwise balance is achieved. Place cap (23) on blade bolt (7) each time spanwise balance is checked.

Note

If balance cannot be obtained, recheck complete assembly procedure and repeat chordwise balance procedure.

q. Raise main rotor hub and blade clear of stand assembly (12, figure 2-13) and remove balance tools from hub and blades.

2-16C. STATIC BALANCING — MAIN ROTOR HUB AND BLADE. (Using Marvel Manufacturing Company Kits.)

Static balancing of the main rotor hub and blade may be accomplished with the use of Marvel Equipment if desired.

CAUTION

Static balancing shall only be conducted in accordance with the Marvel Operation and Service Handbook. If there are any questions concerning the use of this equipment, contact the manufacturer.

2-17. BENCH BALANCING — MAIN ROTOR HUB AND BLADE ASSEMBLY.

CAUTION

Do NOT allow main rotor grips or yoke to rotate on pitch change axis. If grip or yoke is allowed to rotate on the pitch change axis beyond 90 degrees, the main rotor grip retention strap/s must be replaced. Secure main rotor blade grip through the pitch horns to yoke with lockwire or suitable work aid.

Note

The following procedure is applicable to both the (206-010-100 and 206-011-100) main rotor hub and blade assemblies. Rework the (T101576-3) mandrel (11, figure 2-13) and fabricate (T101576-21) spacer before balancing the (206-011-100) main rotor hub. Reworking mandrel and fabricating spacer in accordance with figure 1-13 will reduce sensitivity during balance.

a. Align main rotor blades. (Refer to paragraph 2-16.)

b. Install sling. (Refer to first Note statement in paragraph 2-4) Raise main rotor hub and blade assembly clear of stand. Place stand (12, figure 2-13 beneath main rotor hub on center support

stand. Remove stands used to support blades at preconed angle during alignment procedure to permit main rotor blades to assume natural position. Carefully lower main rotor assembly onto stand (12). Hold stand (12) in position and raise main rotor assembly clear of stand.

CAUTION

Ensure (T101576-21) spacer, (MS134366) ball, and (MS29561-113) packing are installed in (T101576-3) mandrel. (See figure 2-14, detail A.) The (T101576-21) spacer is required after reworking the mandrel in accordance with figure 1-13. Place rotor assembly and mandrel (11, figure 2-13) in stand (12) carefully to prevent damage to stand, ball, and spacer.

c. Index position of stand (12, figure 2-13) by marking around its base on the center support stand with a pencil or use locating holes. (Refer to note below.) Place plate (14) on stand (12). Place level (1) on plate. Level stand by adjusting screws (13) in triangular base of stand. Remove level and plate.

Note

The main rotor assembly must be removed from stand (12) each time sweep adjustments are made. It may be advisable to drill three small holes about 1/8 inch deep in the metal covered center support stand to accommodate the three legs of stand (12). The three legs of the stand would act as dowels and prevent shifting of stand and possible change in level when the main rotor is removed for sweep adjustment.

d. Lower main rotor carefully onto stand (12, figure 2-13. Place level in recess at top of plug (4). Check chordwise balance. Correct chordwise imbalance by sweeping one blade aft. Do not sweep blades forward.

CAUTION

Do NOT make sweep adjustments with rotor resting on stand (12, figure 2-13). Damage to stand may result.

Note

Blade sweep adjustments are sensitive. Do not exceed a maximum of three points turn on the nut (6, figure 2-14). Make pencil or paint index marks on nuts and blade latches. Record all changes made.

e. Raise main rotor assembly clear of stand. Loosen nut on blade bolt (5) in blade to be swept and make sweep adjustment. Carefully replace rotor assembly on stand and recheck chordwise balance. Repeat as required. Torque nuts (6 and 9) 75 to 95 foot-pounds plus friction drag of nuts. Torque nuts on blade bolts (5) 175 to 216 foot-pounds plus friction drag of nuts.

g. Carefully lower main rotor assembly on stand and balance spanwise. Remove cap (55, figure 2-6) from blade bolt (53) of lighter blade. Add lead weight to hollow shank of blade bolt to balance rotor spanwise and replace cap (55) with new packing (54).

h. Raise main rotor clear of balance stand and remove balance tools from rotor.

i. Fill trunnion and grip bearing cavities with lubricating oil (item 50); work out all air bubbles and fill until sight glasses are 1/2 full. Install plugs or reservoir fittings and safety with 0.032 inch lockwire (item 19).

2-18. INSTALLATION — MAIN ROTOR HUB AND BLADE ASSEMBLY.

a. Clean threads, splines, cone seat on mast (13, figure 2-1) and cone set (11) with cleaning solvent (item 12). Examine splines for nicks, burrs, or scratches; if necessary, dress with fine India stone (item 95). Apply a coat of corrosion preventive compound (item 24) to splines on mast (13, figure 2-1), recess provided for cone set (11), and splines of trunnion (10).

b. Install flap restraint kit (6) with screws (5) on trunnion (10), or spacer washer (43 or 45) with screws (42 or 44), as required. (See figure 2-1 ., Note 1, 2, and 3.)

c. Install sling on main rotor hub and blade assembly.

CAUTION

Do NOT allow main rotor grips or yoke to rotate on pitch change axis. If grip or yoke is allowed to rotate on the pitch change axis beyond 90 degrees, the main rotor grip retention strap/s must be replaced. Secure main rotor blade grip through the pitch horns to yoke with lockwire or suitable work aid.

Note

A cable sling fabricated from lengths of rubber hose slipped on the cables will prevent damage to the rotor hub. The sling should be passed through the opening in the rotor grip tangs to prevent blades from turning on pitch change axis during rotor installation.

d. Install blade tie-downs on blades and hoist assembly to position over mast. Align mast and hub master splines.

Note

Place hub directly above mast to prevent thread damage when hub is lowered onto mast.

e. Position cone set (11, figure 2-1) on mast (13) and carefully lower hub and blade assembly (9) onto mast (13) and cone set. Secure hub and blade assembly as follows:

(1) Apply a small amount of corrosion preventive compound (item 24) to threads on mast (13, figure 2-1).

(2) Install mast nut (1) and torque 250 to 275 foot-pounds. Torque as close as possible to 275 foot-pounds maximum that permits installation of lock (4). Use caution to prevent damage to flap restraint kit (6). Install lock (4) with bolt (2) and washer (3), torque to standard torque and secure with 0.032 inch lockwire (item 19). On locking configurations with lock, bolt, washer, and nut stackup, torque lock nut to 60 inch-pounds.

Note

Mast nut (1) must be checked for proper torque 25 hours after every installation.

f. Adjust static stops (3, figure 2-6 or 2-9) as follows:

(1) Move one main rotor blade (34, figure 2-1 .) up until static stop (3, figure 2-6 or 2-9) contacts mast. Align contact surface of static stop with mast.

CAUTION

Ensure static stops have been shimmed to fit fittings prior to torquing bolts.

(2) After static stop is aligned, torque bolts (5) to 175 inch-pounds and safety bolt heads together with 0.032 inch lockwire (item 19).

(3) Repeat procedure for opposite static stop.

(4) Apply a bead of sealant (item 7) to top and sides of static stops and mating surfaces of hub and strap fittings (9, figure 2-6 or 2-9).

g. Adjust length of main rotor blade pitch links from swashplate to pitch horn as follows:

Note

The following pitch link adjustment dimensions are nominal initial settings. Refer to figure 2-5B for minimum clevis thread engagement.

(1) Pitch link assembly (206-010-330). (See figure 2-3). Adjust length of pitch links to 26.510 inches plus or minus 0.010 inch, measured from center of bolt holes in clevises (1 and 7). Set lower clevis (7) to 0.940 inch plus or minus 0.010 inch, and adjust upper clevis (1) to obtain 26.510 inches plus or minus 0.010 inch dimension. Do not exceed 1.390 inches dimension at upper clevis (1).

(2) Pitch link assembly (206-010-342). (See figure 2-4). Adjust length of pitch links to 26.510 inches plus or minus 0.010 inch measured from center of bolt holes in clevises (1 and 8). Set lower clevis (8) to 0.94 inch plus or minus 0.010 inch, measured from center of bolt to obtain 26.510 inches plus or minus 0.010 inch dimension. Do not exceed 1.380 inches plus or minus 0.010 inch dimension, at upper clevis (1).

(3) Pitch link assembly (206-010-355). (See figure 2-5). Adjust length of pitch links to 26.500 to 26.520 inches measured from center of bolt holes in clevises (1 and 8). Adjust barrel (6) to obtain 26.500 to 26.520 inches dimension. Ensure minimum of 0.200 inch plus or minus 0.010 inch clearance is available between lower clevis (8) and jam nut (7), and that 0.51 to 0.57 inch nominal dimension is available at insert (4).

(4) Pitch link assembly (206-010-360). (See figure 2-5A) Adjust length of pitch links to 26.500 to 26.520 inches measured from center of bolt holes in clevises (1 and 6). Ensure a minimum dimension of 2.280 to 2.320 inches exists between upper clevis (1) bolt hole center and top surface of tube insert (2A). Torque upper jamnut (2) 150 to 200 inch-pounds and lockwire (item 19). Torque lower jamnut (5) 150 to 200 inch-pounds.

h. Install pitch link assembly to swashplate and support assembly (14, figure 2-1) and main rotor blade pitch horns with pitch link adjustment locking nut or barrel at bottom. Observe color code dots when installing pitch link assemblies. (Refer to Section IV.) Install bolts (15 and 24, figure 2-1) with bolt heads inboard and in direction of rotation. Secure bolts with washers (16 and 25) and nuts (17 and 26). Three washers may be used under nuts (17 and 26), if required, for correct cotter pin installation. Torque nuts (17 and 26) to 100 to 140 inch-pounds and install cotter pins (18 and 27).

i. Adjust minimum pitch angle of main rotor blades to minus 3/4 degree as follows:

(1) Ensure that collective rigging is correct.

(2) Position collective control stick in full down position and secure with collective friction.

(3) Pull one blade down until hub static stop contacts mast.

(4) Measure pitch angle of one blade on flat surface of grip, adjacent to blade bolt.

(5) While maintaining hub position (refer to step 3), move protractor to opposite grip and measure pitch angle.

(6) Add both pitch angles together, algebraically, and divide the total by two.

(7) Adjust both pitch links equally, and in the same direction, until minus 3/4 degree is obtained.

(8) Apply corrosion preventive compound (item 24) to all threaded surfaces of pitch link assembly.

(9) Safety jam nuts on (206-010-330, figure 2-3 and 206-010-342, figure 2-4) pitch link assemblies, if blades are not to be tracked immediately, with 0.032 inch lockwire (item 19). On (206-010-355) pitch link assemblies safety barrel (6, figure 2-5) to insert (4) with 0.032 inch lockwire. On (206-010-355) pitch link safety upper jamnut (2, figure 2-5A) to insert (2A) with 0.032 inch lockwire.

j. Track main rotor blades. (Refer to paragraph 2-19).

2-19. TRACKING — MAIN ROTOR BLADES.

CAUTION

Only experienced pilots and maintenance personnel should track main rotor blades.

If dynamic tracking and balancing equipment is used, it shall only be conducted in accordance with the chadwick-helmuth operations and service instruction handbook. If there are any questions concerning the use of this equipment, contact the manufacturer.

Note

The need to track main rotor blades will be indicated by a 1:1 vertical vibration. A 1:1 vertical vibration is airspeed sensitive. They can usually be detected in a zero airspeed hover, but normally become worse as airspeed is increased. (Refer to table 2-1 .)

Note

A tracking flag frame may be constructed from aluminum or steel tubing. (See figure 2-15) The flag portion which the blades contact should be strong, light-weight fabric. Reinforcing tape used in aircraft fabric work is a suitable material.

a. Mark each main rotor blade tip with a different color grease pencil (item 18) red and black. Make a narrow chordwise mark at the outermost part of the blade tip cap. Face the helicopter into the wind on a level firm surface and mark a position on the ground at approximately the 2:00 o'clock position relative to the helicopter and about 12 inches outside the rotating disk area of the blades; the base of the tracking flag should be placed on this mark. (Refer to subparagraph e, and see figure 2-15.)

b. Place extra weight or one mechanic in the helicopter during tracking operation to permit application of higher power setting without hovering.

c. Position rotor blade trim tabs to trail position (0°). Use tab bending tool (T101444) and tab gage (T101537) for trim tab adjustments.

d. Operate helicopter at 100 percent N2 rpm. Pilot should apply sufficient collective control to make helicopter light on the ground.

e. Maintain collective setting and reduce N2 rpm to 90 percent. Check the track of the main rotor. The man holding the tracking flag should stand with the flag in front of him and with his back to the advancing rotor blades. He must be able to see the pilot in order that he can receive a signal to obtain the track. (See figure 2-15 .) The base of the tracking flag should be placed on the mark previously made, with the tracking flag extending horizontally away from the rotor. The maintenance man should slowly raise the tracking flag until it approaches the vertical position and the tip path plane; the tracking flag should be tilted slightly in the direction of rotation of the rotor blades. At this point the pilot should observe whether tip path plane will strike the central portion of the flag; if it will, he should signal the maintenance man by a prearranged signal, such as a nod, to make the track. If not, he should signal the maintenance man to lower the flag and adjust flag height as required. When flag height is correct, and on signal from the pilot, the maintenance man should move the flag slowly into the tip path plane and, when the blades touch the flag, immediately tip it away. This procedure should obtain one mark from each blade. The relative vertical position of the blades will be indicated by transfer of the colored mark from the

206010-29

Figure 2-15. Main Rotor Blade Tracking

blades to the flag. It is good practice to take two tracks prior to making any adjustments; a wind gust or slight movement of the controls may cause erroneous indications. Identify original marks on the flag with grease pencil prior to making second track.

f. Inspect the flag for indication of out of track and identify high blade by the color of the marks.

Note

Record all adjustments made to the pitch link assemblies. Only one pitch link assembly is adjusted to correct an out of track condition. (Refer to step g.)
The pitch link fittings incorporate national coarse threads and national fine threads. This permits precision length adjustments of the pitch link without disconnecting clevis fitting. Use the pitch link or barrel as a turnbuckle for making adjustments. (See figure 2-3 , 2-4 , and 2-5) One flat of adjustment will change blade track 1/16 inch. One turn of adjustment will change blade track ⅜ inch.

g. Shorten pitch link, as required, of the high blade. Continue tracking blades and adjusting pitch link or barrel on high blade until tracking marks on the tracking flag overlap or appear as one mark.

CAUTION

Pitch Link Assembly (206-010-330). Maintain dimensions indicated in figure 2-5B When tightening jamnuts (2 and 6) on the upper clevis (1) and lower clevis (7) installed in the pitch link tube assembly (3), torque jamnuts (2 and 6) 150 (minimum) to 200 (maximum) inch-pounds. After tracking adjustments are made, safety nut (6) to tab lock (4) with 0.032 inch lockwire (item 19).

CAUTION

Pitch Link Assembly (206-010-342). Maintain dimensions indicated in figure 2-5B . When tightening jamnuts (2 and 7) on the upper (1) and lower clevis (8) installed in the pitch link tube assembly (3), torque jamnuts (2 and 7) 150 (minimum) to 200 (maximum) inch-pounds. After tracking adjustments are made, safety nut (7) to tab lock (5) with 0.032 inch lockwire (item 19).

CAUTION

Pitch Link Assembly (206-010-355). Adjust pitch link assembly by rotating barrel (6, figure 2-5). Ensure a minimum thread dimension of 0.200 inch plus or minus 0.010 inch, is exposed between lower clevis (8) and jamnut (7). Also 0.51 to 0.57 inch nominal exposed dimension should be available between bottom nut surface of insert (4) and top surface of nut (5). Ensure the two safety holes in barrel (6) are covered by threads. Torque nuts (5 and 7) to barrel (6) to 150 to 200 inch pounds. Safety barrel (6) to insert (4) with 0.032 inch lockwire (item 19).

CAUTION

Pitch link assembly (206-010-360). (See figure 2-5A.) Maintain dimensions indicated in figure 2-5B Torque upper jamnut (2) 150 to 200 inch-pounds and lockwire (item 19). Torque lower jamnut (5) 150 to 200 inch-pounds.

CAUTION

Autorotation is affected by changes in pitch link settings. Do NOT increase or decrease length of BOTH pitch links during tracking procedure.

h. After rotor has been placed in track by adjustment of the pitch link on the high blade, operate the helicopter at 100 percent N2. Apply sufficient collective control to make helicopter light on the ground. Maintain 100 percent N2 rpm and track rotor blades.

CAUTION

Do NOT exceed 7 degrees tab up or 7 degrees tab down.

i. Test fly the helicopter throughout the speed range to ensure that vibration level and autorotation rpm is satisfactory. It is recommended that autorotation rpm be checked at low gross weights. Determine autorotation rpm at 60 mph airspeed. Autorotation rpm should be 90 percent with minimum safe fuel load, one pilot (170 pounds) and with collective full down. Autorotation rpm should be 107 percent rpm at maximum gross weight, and should not exceed 107 percent.

j. If required, correct autorotation rpm as follows:

CAUTION

(Refer to five Caution statements of subparagraph g.)

Minimum and maximum dimensions required for pitch link assemblies must not be exceeded. (See figures 2-3, 2-4, or 2-5.)

After pitch link assembly adjustments are completed, torque jamnuts to 150 to 200 inch-pounds. Safety jamnuts with 0.032 inch lockwire (item 19) on (206-010-330 and 206-010-342) pitch link assemblies. On (206-010-355) pitch link assemblies safety barrel (6, figure 2-5) to insert (4) with 0.032 inch lockwire (item 19). On (206-010-360) pitch link assemblies safety jamnut (2, figure 5-5A) to insert (2A) with 0.032 inch lockwire (item 19). Apply corrosion preventive compound (item 24) to all exposed thread areas and nut surfaces. (See figure 2-3 and 2-4.)

(1) If autorotation rpm is low, decrease length of both pitch links an equal amount.

(2) If autorotation rpm is high, increase length of both pitch links an equal amount.

(3) Test fly helicopter to confirm that autorotation rpm is set correctly.

k. Accomplish flap restraint kit preflight adjustment inspection if installed. (Refer to paragraph 2-27)

2-20. SPANWISE BALANCING — MAIN ROTOR ASSEMBLY. (Rotor installed on helicopter.)

Note

To accomplish main rotor spanwise balancing using MARVEL Mfg. Co. equipment, refer to the appropriate MARVEL Mfg. Co. manual and bulletins.

Note

The need to balance main rotor blades will be indicated by a lateral 1:1 vibration. Lateral 1:1 vibrations are rpm sensitive — NOT airspeed sensitive.

a. Operate helicopter at 100 percent rotor rpm and note degree of lateral vibration.

b. Install one or two wraps of 2-inch-wide masking tape (item 75) around either main rotor blade tip. Operate helicopter at 100 percent rpm and note degree of lateral vibration. If condition is worse, remove tape and install equal amount on opposite blade. Repeat with varying amounts of tape until rotor is balanced.

Note

If the rotor cannot be balanced by use of masking tape it is probable that the rotor is out of chordwise balance. (Refer to paragraph 2-21)

c. If rotor vibration was corrected by spanwise balance procedure outlined in subparagraph 6., remove masking tape and install a quantity of lead weight, equal to 10.8 times the weight of the tape, in the hollow shank of the appropriate blade bolt (1, figure 2-2).

Note

The amount of lead weight to be installed in the blade bolt to compensate for one wrap of 2-inch-wide masking tape is 56 grams, or 2 ounces.

d. Carefully remove cap (53, figure 2-6) with a screwdriver and place weight in blade bolt. Record the amount of weight added. Replace cap and operate helicopter at 100 percent rpm to confirm that the correct amount of weight has been added and vibration has been eliminated.

2-21. CHORDWISE BALANCING — MAIN ROTOR ASSEMBLY. (Rotor installed on helicopter.)

Note

To accomplish chordwise balancing using MARVEL Mfg. Co. equipment, refer to the appropriate MARVEL Mfg. Co. manual and bulletins.

a. Operate helicopter at 100 percent rotor rpm and observe degree of lateral vibration.

b. Correct for spanwise out of balance if not previously accomplished. (Refer to paragraph 2-20)

c. Sweep either main rotor blade aft slightly as follows: Do not sweep blades forward.

(1) With a pencil index mark the position of nut (7, figure 2-14) on the leading edge side of the main rotor blade (2) and loosen nut approximately one point.

Note

Blade sweep adjustments are sensitive. Do NOT exceed a maximum of three points turn of nut (7). Record all adjustments made.

(2) Loosen main rotor blade bolt (5) 1/4 to 1/3 turn.

(3) Torque nut (6) on the trailing edge side of the main rotor blade (2) to 75 to 95 foot-pounds.

(4) Torque nut (7) on the leading edge side of the main rotor blade (2) to 75 to 95 foot-pounds plus friction drag of nut.

(5) Torque main rotor blade bolt (5) 175 to 216 foot-pounds.

(6) Record amount of aft sweep adjustment made.

d. Operate helicopter at 100 percent rpm and observe degree of lateral vibration. Make additional adjustment to same blade or return blade to original position and sweep opposite blade aft as indicated by amount of vibration noted. When approximate balance has been attained, make very small adjustments, as precise as 1/4 point, to nuts (7, figure 2-14).

CAUTION

Do NOT sweep blades forward. Do NOT exceed three points adjustment on nuts (7) when sweeping blades aft. If doubt exists concerning actual blade alignment position, align blades by string method, and repeat chordwise balancing procedure.

2-21A. CHORDWISE BALANCE PROCEDURE USING WEIGHTS — MAIN ROTOR ASSEMBLY.

a. Chordwise balance is accomplished in accordance with paragraph 2-21 and Chadwick charts, except weight is added to the weight retainer when other than a full point of sweep is required.

b. The weight retainer will accept eight (8) thick weights, P/N 206-011-157-101. Eight -101 weights are equal to one point of sweep.

c. The weights are as follows:

P/N	Weight (grams)	Thickness (+.010 inch)
206-011-157-101	100	.250
206-011-157-103	50	.125
206-011-157-105	25	.063

2-22. FLAP RESTRAINT.

2-23. DESCRIPTION. The flap restraint is installed on the main rotor hub trunnion and incorporates counterweights and springs which limit flapping freedom during starting and shutdown, but allow normal flapping at operating rpm. (Refer to figure 2-16)

2-24. REMOVAL — FLAP RESTRAINT.

a. Remove mast nut (1, figure 2-1) and lock (4) from flap restraint (6). (Refer to paragraph 2-4)

b. Remove two screws (5, figure 2-1) and lift flap restraint (6) from trunnion (10).

2-24A. INSPECTION AND REPAIR — FLAP RESTRAINT.

a. Visually inspect support and arm assembly in accordance with figure 2-16A.

b. Inspect arm assembly for bond line separation of rubber stop.

c. Inspect springs (7, fig. 2-16) for correct spring rate, 1.0 inch extension under a pull of 0.84 (±0.08) pounds.

d. Ensure that arm assemblies operate freely and that 0.002 inch minimum clearance exists between faces of arm assembly (4) and slot in support (10).

e. Repair damage to mast nut lock (4, fig. 2-1) which would prohibit functional engagement. Replace mast nut lock if cracked.

2-25. INSTALLATION — FLAP RESTRAINT.

a. Position flap restraint (6, figure 2-1) on (206-010-136 or 206-011-113) trunnion and secure with two (MS 24694-55) screws (5).

b. Install mast nut (1) and torque as close as possible to 275 foot-pounds maximum, and permit installation of lock (4).

c. Install lock (4) and secure with bolt (2), washer (3), and safety with 0.032 inch lockwire (item 19). On helicopters with lock, bolt, washer, and nut stackup, torque locknut to 60 inch-pounds.

2-26. INSTALLATION — PARTS TO REPLACE FLAP RESTRAINT.

NOTE

The following parts and procedures are to be used when operator does not use the flap restraint.

a. Install on main rotor hub and blade assembly with (206-010-136) trunnion installed as follows.

(1) Install (206-010-199-1) spacer washer (43, figure 2-1 view B) on trunnion (10) and align screw holes. Secure spacer washer with two (AN509-10R13) screws (42).

(2) Install mast nut (1) and torque as close as possible to 275 foot-pounds maximum, and permit installation of lock (4).

(3) Install lock (4) and secure with bolt (2), washer (3), and safety with 0.032 inch lockwire (item 19). On helicopters with lock, bolt, washer, and nut stackup, torque locknut to 60 inch-pounds.

b. Install on main rotor hub and blade assembly with (206-011-113) trunnion installed as follows:

(1) Install (206-010-140-3) spacer washer (45, figure 2-1 view C) on trunnion (10) and align screw holes. Secure spacer washer with two (MS24693S271) screws (44).

(2) Accomplish steps a(2) and (3) above.

2-27. ADJUSTMENT — FLAP RESTRAINT ENGAGEMENT RPM.

a. Inspect flap restraint assembly to ensure that the arms (4, figure 2-16) operate freely and that springs (7) will retract arms to upright position.

b. Accomplish preflight inspection. Start helicopter and note percent rpm at which the flap restraint arms (4) move outboard as rotor percent increases. Allow engine to stabilize at completion of standard starting procedure, then shut down engine and note percent at which the flap restraint arms (4) move into upright position. Both flap restraint arms should operate in the rpm range of 25 to 31 percent as rpm increases or decreases.

c. If flap restraint arm operation occurs below 25 percent, remove washers (3) and replace with washers (2). If flap restraint arm operation occurs above 31 percent, remove washers (2) and replace with washers (3). Torque nut (1) to 60 to 85 inch-pounds after changing washers.

NOTE

Make washer adjustments as required, but a maximum of eight washers (3) and nine washers (2) may be installed on each arm.

d. If washer adjustment does not cause flap restraint arms to operate at correct percent rotor rpm, check springs (7). A pull of 1.25 (±0.1) pounds should cause a 1 inch extension of spring (7).

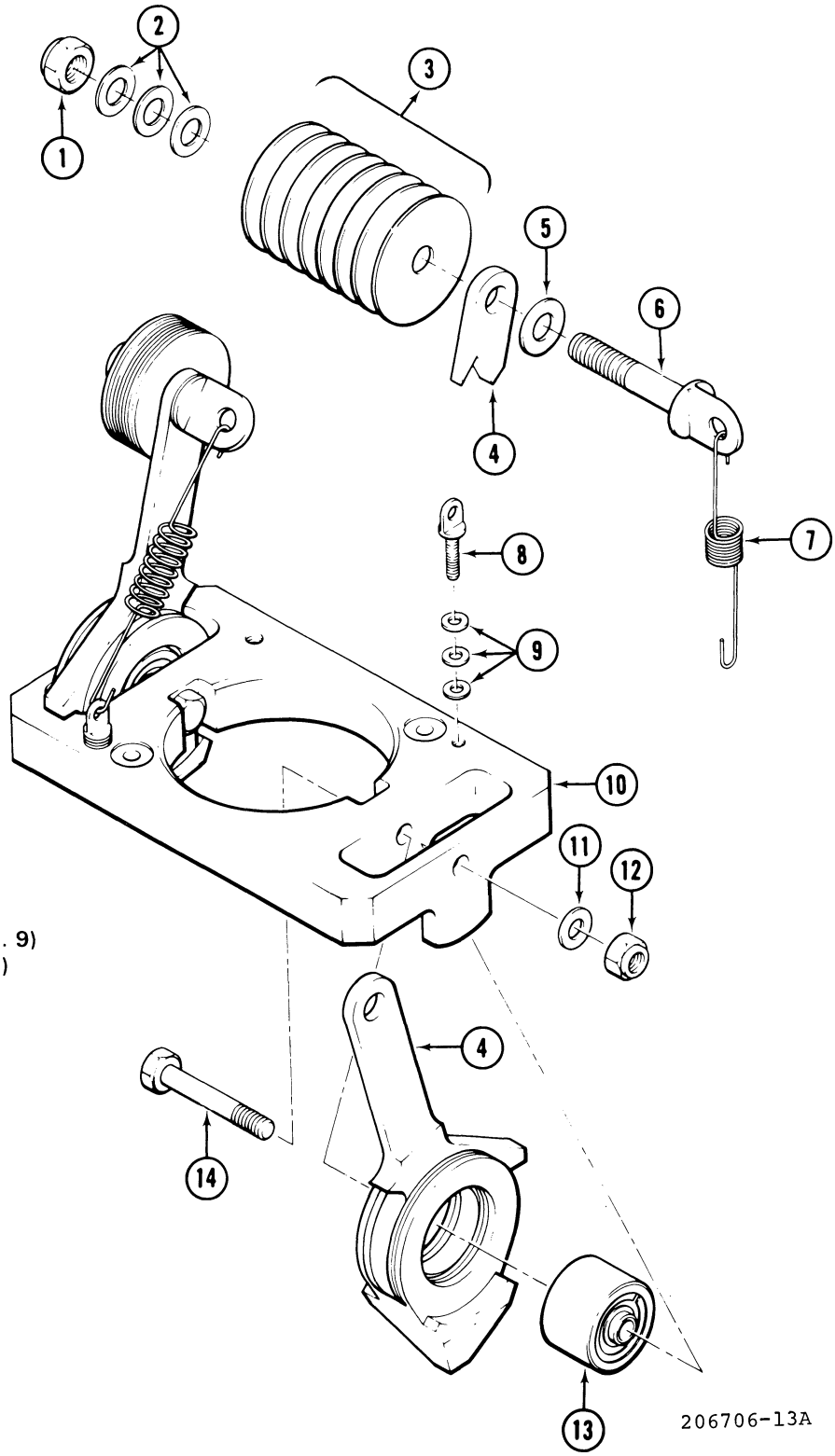

1. Nut
2. Washer, AN960-516 (Max. qty. 9)
3. Washer, AN970-5 (Max. qty. 8)
4. Arm Assembly
5. Washer, AN960-616
6. Eye Bolt
7. Spring
8. Eye Bolt
9. Washer
10. Support
11. Washer
12. Nut
13. Bearing
14. Bolt

Figure 2-16. Flap Restraint Kit

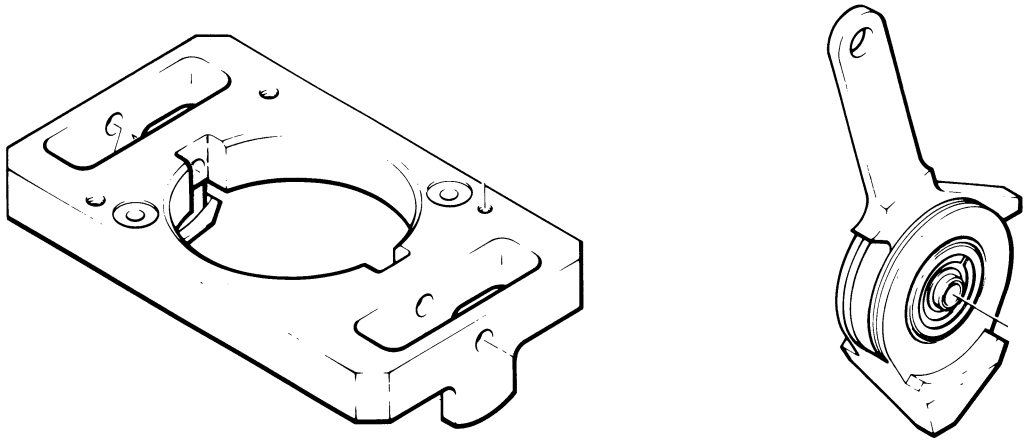

206-011-117-3 FLAP RESTRAINT ASSEMBLY

TYPE OF DAMAGE	MAXIMUM DAMAGE AND REPAIR DEPTH
MECHANICAL	0.010 in. Before and after repair
CORROSION	0.010 in Before and after repair
AREA	0.100 Sq. in.
NUMBER OF REPAIRS	Not critical

Threads:
Depth: One-third of thread
Length: One-fourth of circumference
Number: Two threads

206011-183

Figure 2-16A. Flap Restraint Assembly — Damage and Repair Limits

Part 1
Overhaul - Main Rotor Hub Assembly (P/N 206-010-100)

Note

For Main Rotor Hub Assembly (206-011-100), refer to Overhaul, Part 2.

Note

Screen records and retire those components which have accumulated maximum operating time or will accumulate maximum operating time before next scheduled overhaul. (Refer to Section I, MANDATORY RETIREMENT SCHEDULE.)

Note

Limits Charts, listing critical dimensions of parts, are provided as a convenience in determining closeness of fit between mating parts. They also provide replacement dimensions as a guide for replacement of worn parts. It is not intended that all dimensions listed on Limits Charts are to be checked out as a prescribed overhaul procedure. Parts that show evidence of wear or physical damage will be checked dimensionally.

Note

For consumable materials item numbers, refer to Section I, CONSUMABLE MATERIALS, Table 1-1 .

2-28. MAIN ROTOR HUB ASSEMBLY (206-010-100) – OVERHAUL.

CAUTION

Do NOT allow main rotor grip or yoke to rotate on pitch change axis. If grip or yoke is allowed to rotate on the pitch change axis beyond 90 degrees, the main rotor grip retention strap/s must be replaced. Secure main rotor blade grip through the pitch horns to yoke with lockwire or suitable work aid.

The special tools required for overhaul of the main rotor hub assembly are contained in table 2-2

Table 2-2. Special Tools for (206-010-100) Main Rotor Hub – Overhaul

PART NO.	NOMENCLATURE
T101539	Stake Tool, Pitch Horn
T101554*	Socket, Main Rotor Strap Retention Bolt
No Number*	Grip Retainer Remover
No Number *	Mandrel, Main Rotor Hub Excluder
No Number*	Spoon, Packing

*Locally fabricated work aids (see figure 1-13).

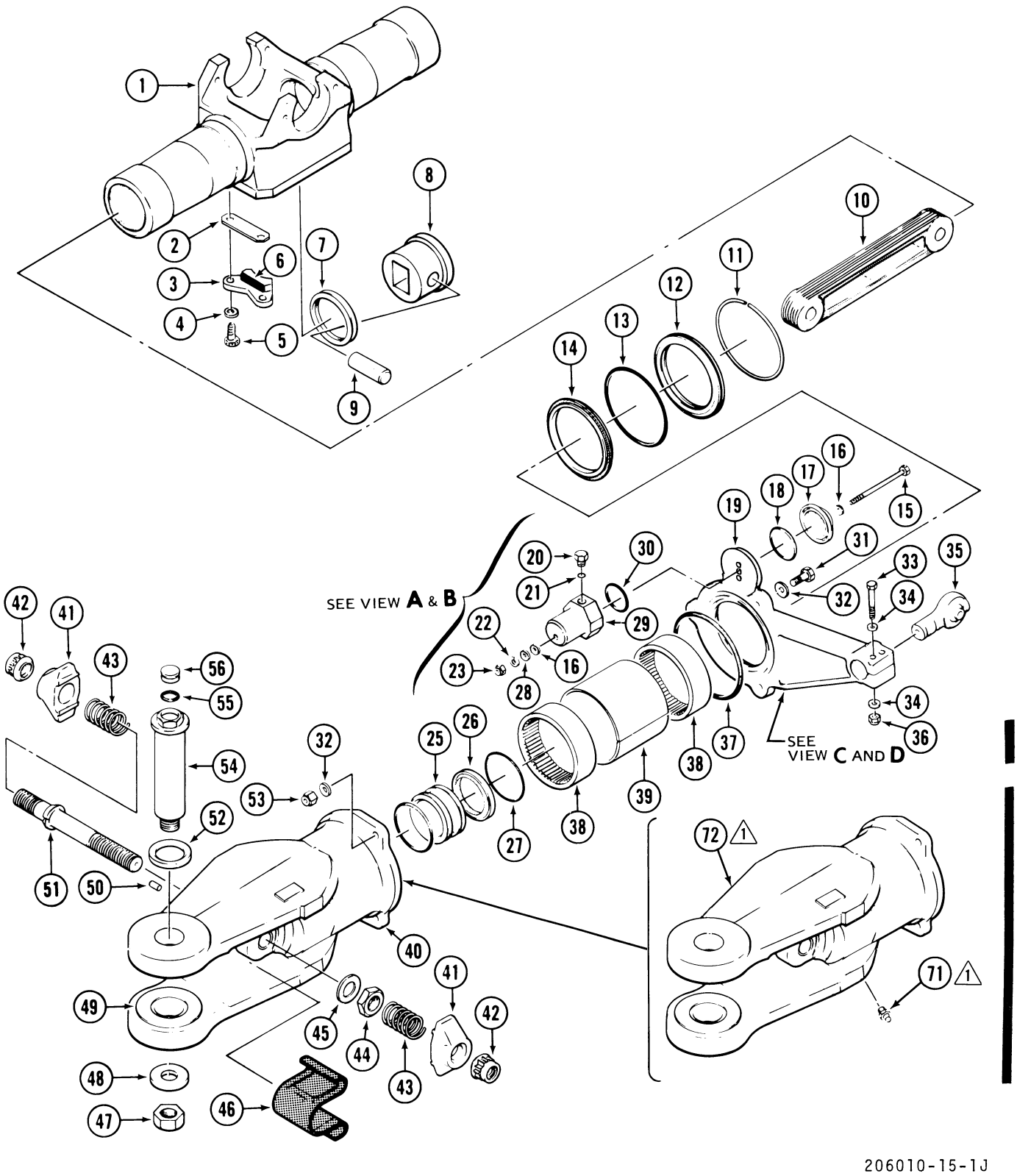

Figure 2-17. Main Rotor Hub (206-010-100) — Overhaul (Sheet 1 of 2)

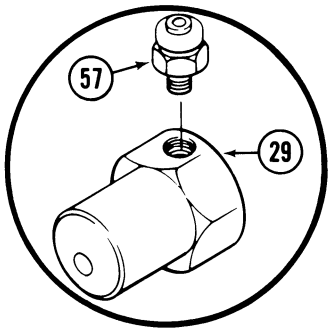

EFFECTIVE (206-010-100-5 AND -7) MAIN ROTOR HUBS.
REPLACES PACKING (21) AND PLUG (20).

RESERVOIR FITTING
VIEW **A**

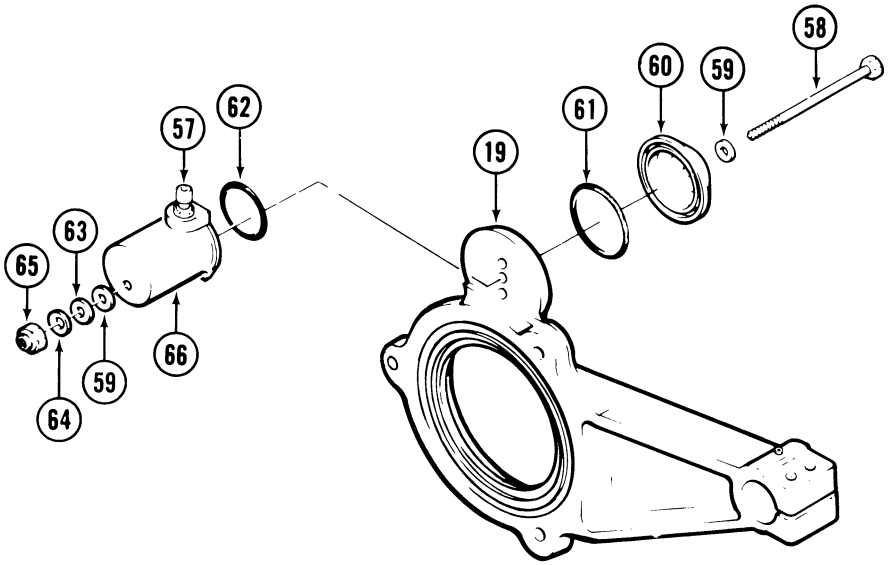

EFFECTIVE (206-010-100-9) MAIN ROTOR HUBS.
REPLACES PARTS (15) THROUGH (18), (20) THROUGH (23),(28) THROUGH (30), AND FUTURE SPARES.

RESERVOIR ASSEMBLY
VIEW **B**

1. Yoke
2. Shims
3. Static Stop
4. Washer
5. Bolt
6. Rubber stop
7. Ring
8. Strap fitting
9. Pin
10. Strap
11. Retainer ring
12. Retainer
13. Packing
14. Seal
15. Bolt
16. Stat-O-Seal
17. Sight glass
18. Packing
19. Pitch horn
20. Plug
21. Packing
22. Lockwasher
23. Nut
24. Packing
25. Retainer
26. Excluder
27. Packing
28. Washer
29. Reservoir
30. Packing
31. Bolt
32. Washer
33. Bolt
34. Washer
35. Bearing
36. Nut
37. Packing
38. Bearing
39. Spacer
40. Grip
41. Latch
42. Nut
43. Spring
44. Nut
45. Washer
46. Closure
47. Nut
48. Washer
49. Buffer pad
50. Pin
51. Strap bolt
52. Washer
53. Nut
54. Blade bolt
55. Packing
56. Cap
57. Reservoir fit
58. Bolt
59. Stat-O-Seal
60. Sight glass
61. Packing
62. Packing
63. Washer
64. Lockwasher
65. Nut
66. Reservoir
67. Nut
68. Bolt
69. Washer
70. Washer
71. Lubrication fitting △1
72. Grip △1
73. Plate
74. Washer
75. Washer
76. Nut
77. Bolt
78. Relief valve

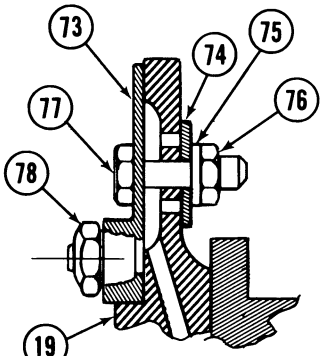

VIEW **D**

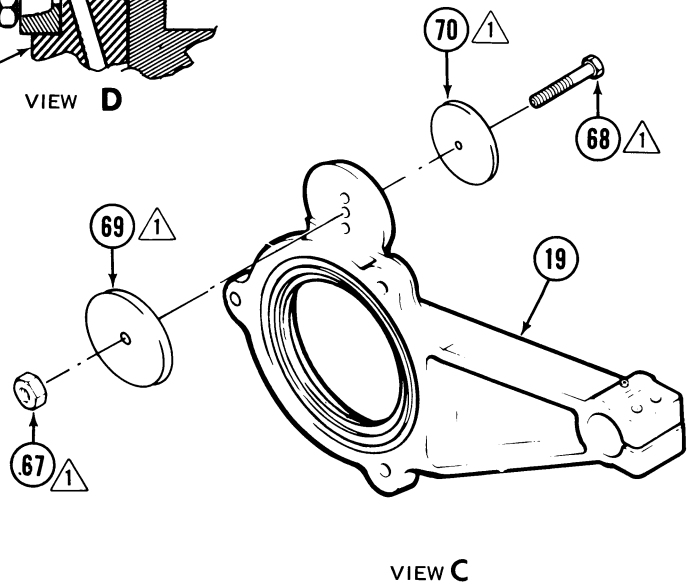

VIEW **C**

△1 Used on main rotor hub (206-010-100-3 through -9) to permit grease lubrication.

206010-15-2E

Figure 2-17. Main Rotor Hub (206-010-100) – Overhaul (Sheet 2 of 2)

2-29. DISASSEMBLY – MAIN ROTOR HUB.

a. Place main rotor hub on a work bench or stand for disassembly and layout of parts.

b. Remove blade bolts (54, figure 2-17) by removing nuts (47) and washers (48 and 52). Discard nuts (47).

c. Remove and disassemble both grips (40) as follows:

(1) Remove nuts (42), latches (41), and springs (43).

Note

Remove (206-010-005) covers from leading edge side of strap bolts (51) on (206-010-000-3, -5, and -7) main rotor hubs if installed.

(2) Remove nuts (44) and washers (45) from strap bolts (51). Use (T101554) socket wrench to remove nuts (44) and discard. (See figure 1-13 for fabricating (T101554) socket wrench.) Pull strap bolts (51, figure 2-17) from trailing edge side of grips (40).

(3) Remove nuts (53), washers (32), and bolts (31). Pull grips (40), outboard and allow oil to drain. Remove grips and pitch horns (19) from yoke (1).

(4) Cut and remove lockwire from bolts (5) at static stops (3). Remove bolts (5), washers (4), static stops (3), shims (2), and rubber stops (6).

(5) Push straps (10) inboard in yoke (1) to break sealant around fittings (8). Remove pins (9), rings (7), strap fittings (8), and straps (10).

(6) Insert a wooden dowel or aluminum tube (2.093 to 2.125 inches in diameter by 12 to 14 inches in length, see figure 1-13 for fabrication and use of work aid) into retainer (25, figure 2-17). Rock dowel or tube to break sealant around retainers, then remove from grips. Remove packings (24 and 27), and excluders (26) from retainers (25).

WARNING

Wear asbestos gloves when handling heated parts. Do not exceed 200°F (93°C).

(7) Apply heat lamp to grips (40) and remove bearings (38) and spacers (39).

(8) Remove closures (46) and buffer pads (49) from each grip (40). Do not remove locking pins (50) on trailing edge side of each grip.

d. Disassemble both pitch horns (19) as follows:

(1) Oil lubricated hubs.

(a) Remove grip sight glasses and reservoirs as follows:

1 On (206-010-100-3, 5, and -7) main rotor hubs remove nut (23), lockwasher (22), washer (28), stat-o-seal (16), reservoir (29), and packing (30) from outboard side of pitch horns (19). Remove bolt (15), stat-o-seal (16), sight glass (17), and packing (18) from inboard side of pitch horns. Remove plug (20) and packing (21), or reservoir fitting (56, view A) from reservoir (29). Discard all packings and stat-o-seals.

2 On (206-010-100-9) main rotor hubs remove nut (65, view B), lockwasher (64), washer (63), stat-o-seal (59), reservoir (66), and packing (62) from outboard side of pitch horns (19). Remove bolt (58), stat-o-seal (59), sight glass (60), and packing (61) from inboard side of pitch horns. Remove reservoir fittings (57) from reservoirs (66). Discard all packings and stat-o-seals.

(b) Remove nuts (36), washers (34), bolts (33), and remove bearings (35) from each of pitch horns (19).

(c) Remove retainer ring (11), retainer (12), packing (13), and seal (14) from each pitch horn (19).

(2) Oil lubricated hubs modified by Technical Bulletin 206-78-5 for grease.

(a) Remove nut (67), bolt (68), and washers (69 and 70) from pitch horn (19).

(b) Press seal (14) from pitch horn (19). Use caution to prevent damage to pitch horns.

e. Remove and disassemble main rotor hub (206-010-136) trunnion (5, figure 2-18) as follows:

Note

For removal and disassembly of (206-011-113) trunnion that may be used with (206-010-100) main rotor hub assembly, refer to Section II, Overhaul, Part 2.

(1) Remove two screws (1) and remove flap restraint (4) from trunnion (5), if installed.

(2) Remove two screws (34) and washers (33) from trunnion (5) if flap restraint (4) is not installed.

(3) Remove plug (18) and packing (20) from cover (21). Remove screws (15), lockwasher (16), washers (17), and stat-o-seals (19) from each sight

glass (23). Remove and separate cover (21) and sight glass (23) from each pillow block (24). Discard all packings and stat-o-seals.

(4) Remove two nuts (32) and washers (31) from inboard side of yoke (30). Remove bolts (25), washers (26), bushings (27 or 28), and slide pillow blocks (24) from trunnion (5).

(5) Remove trunnion (5) from yoke (30) and turn adjusting screw (6) to push thrust washers (7) and packing (8) out of journal end of trunnion. Remove adjusting screws (6) by continuing to turn in the same direction. Discard packing.

(6) Remove retainer ring (9), retainer (11), glyd ring (13), and packings (10 and 12) from each pillow block (24). Apply heat lamp to pillow blocks (24), as required, to remove bearings (14). Do not heat pillow blocks (24) in excess 200°F (93°C).

2-30. CLEANING — MAIN ROTOR HUB.

Note

Provide adequate corrosion protection of parts if parts are not overhauled immediately after cleaning.

a. Clean all parts with solvent (item 12). Dry with filtered compressed air. Do not allow bearings to spin while drying.

b. Clean sealant and adhesives from parts with a plastic scraper and methyl-ethyl-ketone (item 17).

c. Clean teflon surfaces with a clean cloth and methyl-ethyl-ketone (item 17).

2-31. INSPECTION AFTER DISASSEMBLY — MAIN ROTOR HUB.

Visually inspect all parts for damage that would require replacement. Discard damaged parts.

2-32. SPECIAL INSPECTION — MAIN ROTOR HUB.

If the accompanying records and/or physical appearance of components indicates that component has been subjected to an accident or incident such as overspeed, overtorque or sudden stoppage, refer to paragraph 2-41, SPECIAL INSPECTION, for evaluation criteria.

2-33. NORMAL INSPECTION — MAIN ROTOR HUB.

a. Inspect hub components for mechanical and corrosion damage in accordance with figures 2-24 through 2-34 as applicable. Score marks in holes and bores shall not exceed 0.002 inch in depth for one-fourth the circumference, except as noted in figures 2-24 through 2-34.

Note

See figures 2-35A and 2-35B for application of corrosion preventive compound (item 24, table 1-1).

b. Inspect all bearings for smooth operation, brinelling, spalling, damaged rollers or race.

c. Inspect oil sight glasses (17 or 60, figure 2-17) and sight glasses (23, figure 2-18) for cracks, crazing, or discoloration.

d. Inspect threaded areas for damage. Damage and subsequent repair shall not exceed limits specified in figures 2-24 through 2-34.

e. Inspect teflon pads (29, figure 2-18) on pillow blocks (24). Replace pads if worn through or severe fretting has occurred.

f. Inspect bearing journals of yoke (1, figure 2-17) for damage, such as spalling or scoring in the roller path. If wear limits of figure 2-19 are exceeded, replaced yoke.

g. Remove paint from grips (40, figure 2-17) and pitch horns (19) with solvent (ilem 61), prior to inspection.

h. Refer to Section I, SPECIAL INSPECTION — ACCEPTANCE STANDARDS for magnetic particle or fluorescent penetrant inspection criteria.

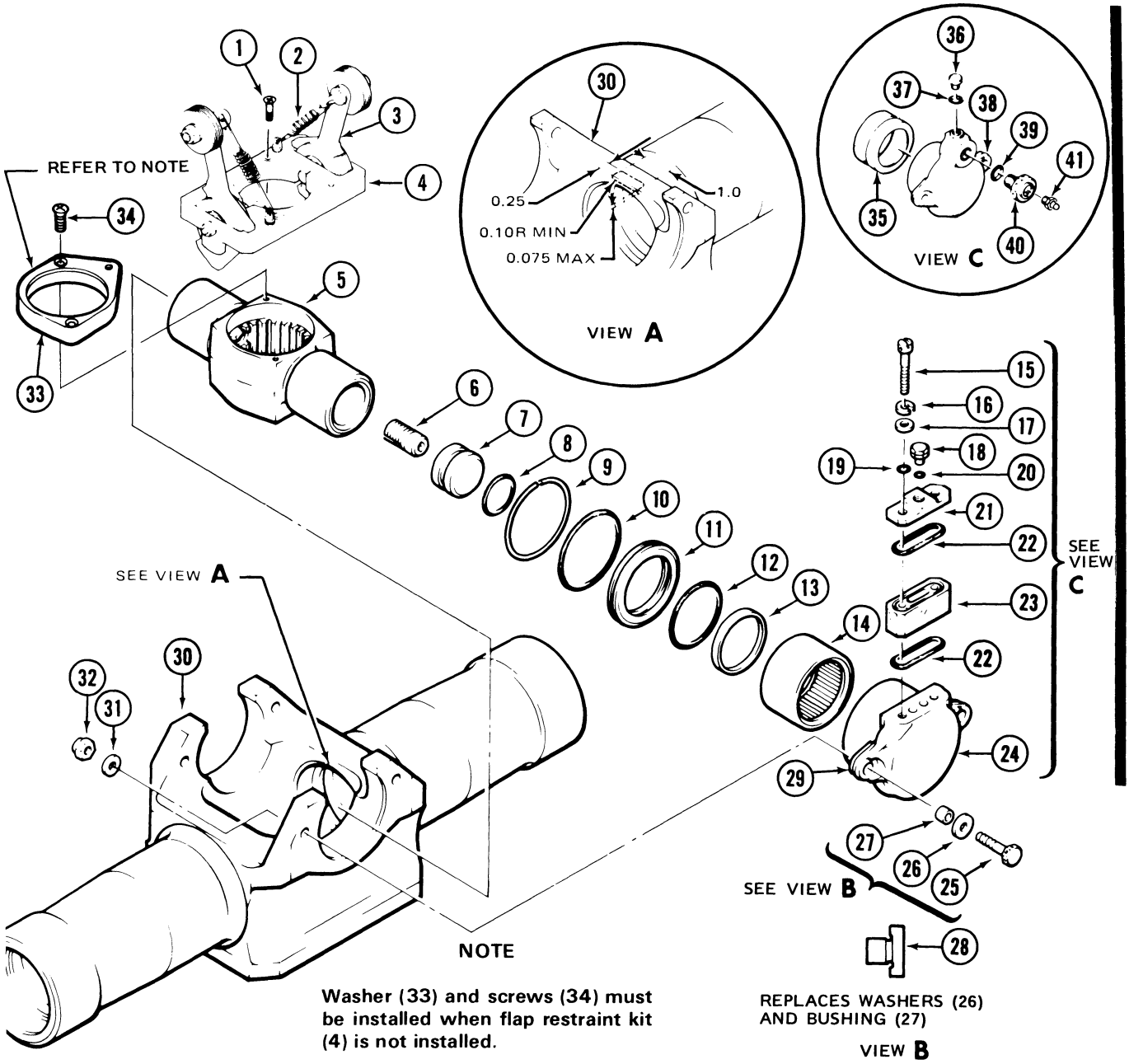

1. Screw
2. Spring
3. Arm
4. Flap restraint
5. Trunnion (206-010-136)
6. Screw
7. Thrust washer
8. Packing
9. Retaining ring
10. Packing
11. Retainer
12. Packing
13. Glyd ring
14. Bearing
15. Screw
16. Lockwasher
17. Washer
18. Plug
19. Stat-O-Seal
20. Packing
21. Cover
22. Packing
23. Sight glass
24. Pillow block
25. Bolt
26. Washer
27. Bushing
28. Bushing
29. Pad — Teflon
30. Yoke
31. Washer
32. Nut
33. Washer — Spacer
34. Screw
35. Bearing
36. Filler plug
37. Packing
38. Pillow block
39. Packing
40. Plug
41. Lubrication fitting

206010-108B

Figure 2-18. Main Rotor Hub (206-010-136) Trunnion — Overhaul

i. Inspect parts dimensionally if visual indication of wear is found. (See figure 2-19)

j. Inspect static stop (3, figure 2-17) visually for damage to mounting holes or surface adjacent to strap fitting.

k. Check axial and radial play in bearing (35). Axial and radial play not to exceed 0.010 inch.

l. Inspect tension/torsion straps (10) for wire strand failures and for abnormalities as follows:

(1) A total of 25 broken wires (50 loose ends) protruding through urethane coating of any one of the 8 outside corners is cause for rejection. A total of 400 loose ends found over the entire strap surface is cause for rejection.

(2) Strap bulge in excess of 0.006 inch outside the normal straight contour is cause for rejection. Bulging of strap cross-section in any area from the ends of the strap to 3.5 inches inboard is normal and not cause for rejection.

(3) Cracks in urethane coating are acceptable providing wires are not visible.

(4) Delamination of urethane coating from the bushing is acceptable. Delamination may cause the wires to be visible and is not cause for rejection. Delamination in any other area is cause for rejection.

(5) A permanent set in twist may occur and is not cause for rejection.

(6) Strap stiffness can vary when flexed in an unloaded condition and is not cause for rejection.

(7) Oil contamination resulting in swelling of the urethane coating is cause for rejection. If oil has come in contact with strap but swelling has not occurred, strap assembly shall be cleaned with denatured alcohol to remove all traces of oil.

(8) Displacement of urethane around bushings and inner surface of wire bundle is cause for rejection.

(9) Cracks in strap bushings are cause for rejection. Inspect using a ten power glass.

(10) Inspect bushings for fretting corrosion. A maximum of 0.005 inch in depth for 25 percent total area is allowed on bushing flange surfaces. A maximum of 0.002 inch in depth is allowed for one-fourth of total bushing bore surfaces.

m. Deleted.

n. Inspect yoke (30) for wear from flap restraint arms (3). Maximum allowable wear or clean up (typical two places) on yoke (30) shall not exceed the limits shown in figure 2-18 , view A.

2-33A. APPLICATION OF CORROSION PREVENTIVE COMPOUND — MAIN ROTOR HUB.

a. During hub reassembly, apply corrosion preventive compound (item 24, table 1-1) to the following parts as indicated. (See figure 2-35A and 2-35B .)

(1) Yoke — Surfaces in contact with strap fittings, radius rings, pillow blocks, and inside diameter.

(2) Strap assemblies — Apply to spool boxes and faces.

(3) Strap fittings — Surface in contact with strap pins, radius rings, and strap assemblies.

(4) Strap pins, radius rings latch bolts and blade bolts shanks.

(5) Grips — Surfaces in contact with straps, latch bolts and nut and blade bolts.

(6) Pitch horns — Surfaces in contact with pitch change link trunnion assemblies, grips and attachments.

(7) Pillow blocks — Surfaces in contact with yoke.

(8) Trunnion — Splines and ID of splines adjusting screw threads.

(9) Prior to installation of main rotor blades, coat grip tangs and buffer pads with corrosion preventive compound (item 24).

2-33B. APPLICATION OF SEALING COMPOUND — MAIN ROTOR HUB.

a. During hub reassembly, apply sealing compound (item 115, table 1-1) to the following parts as indicated. (See figure 2-35A and 2-35B .)

Note

Thoroughly clean surfaces to receive sealing compound with clean cloths dampened with methyl-ethyl-ketone (item 17, table 1-1). Wipe surfaces dry with a clean cloth before solvent evaporates.

(1) Strap fittings — around flange to seal yoke bore, no edge voids are permitted.

(2) Closures — seal to grip, no edge voids are permitted.

(3) Pitch horns — O.D. of seals, prior to installation.

(4) Outboard seal retainers — seal to grip in accordance with paragraph 2-35 .

(5) Dust shields — position against pitch horns (after grip installation) and seal to yoke with 1/8 to 1/4 inch bead of sealant. Ensure grips are fully extended overboard.

(6) Pillow blocks — O.D. of seals, prior to installation.

(7) Trunnion — fill area (360 degrees) between fillet radii on trunnion and bearing inner races, P/N 206-011-111-003. Fair in sealing compound to contour. No edge voids are permitted.

Note

Sealing compound application on trunnion P/N 206-010-136-003, is not required.

(8) Center and preload trunnion and loctite adjusting screws per paragraph 2-35 . Fill cavities for screws with sealing compound (item 007, table 1-1.)

b. Spray entire hub assembly with WD-40 oil. If hub requires painting, delay coating until paint cures.

c. Reassemble and install main rotor hub and blade per paragraph 2-18 .

2-34. REPAIR AND REPLACEMENT — MAIN ROTOR HUB.

a. Replace all packings, stat-o-seals, seals, washers, and self locking type nuts.

b. Replace parts that are cracked, broken, distorted, or have mutilated threads.

c. Replace parts that exceed allowable limits for wear or damage. (See figures 2-19 , and 2-24 through 2-34 .)

d. Replace oil level sight glasses (17 or 60, figure 2-17) and sight glasses (23, figure 2-18), if cracked, crazed, or discolored.

e. Replace trunnion (5, figure 2-18) or bearings (14) if damaged, wear limits are exceeded, or bearings are not smooth in operation.

f. Replace teflon pads (29) on pillow blocks (24) if pad is worn through or severe fretting has occurred. Replace pads as follows:

(1) Remove pads and abrade pillow block lightly with 400 grit abrasive cloth or paper (item 14 or 15). Remove sanding residue with MEK (item 17) and wipe dry.

(2) Apply adhesive (item 41) in accordance with manufacturers instructions to faying surface of pillow block and pad. Position pad on pillow block, using care to ensure alignment.

(3) Remove excess adhesive squeeze-out with a cloth moistened with MEK (item 17). Apply firm pressure to pad and cure adhesive for 24 hours at 70° to 90°F (21° to 32°C) or alternate cure for 60 minutes at 175° to 185°F (79° to 85°C).

g. The bearing surfaces of blade bolts (54, figure 2-17) and the portion of the 206-010-169-1 strap bolt (51) which bears on the strap (10) and grip (40) are coated with a solid film lubricant.

WARNING

Methyl-Ethyl-Ketone is toxic and flammable. Use only in well ventilated area. Do not use near open flame.

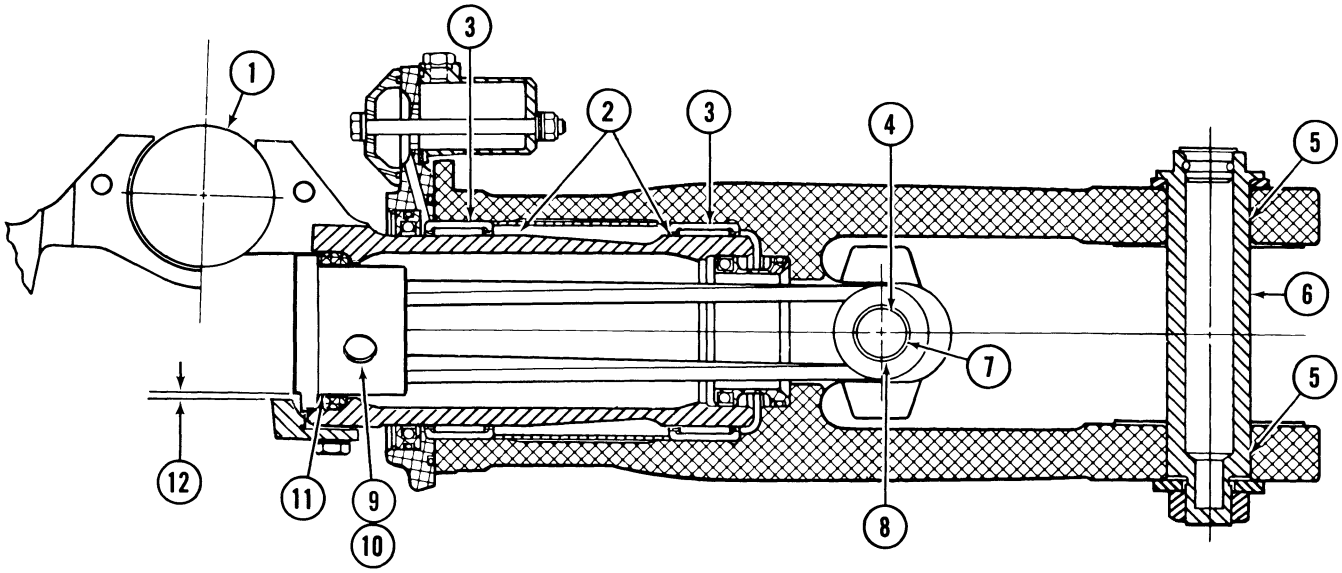

ITEM	NOMENCLATURE		MIN. INCHES	MAX. INCHES
1.	Main Rotor Yoke (Diameter of two holes at trunnion pillow block mounting points)	ID	2.6250	2.6270
2.	Main Rotor Yoke (Diameter of four main rotor grip bearing surfaces)	OD	3.4970	3.5005
3.	Main Rotor Grip	ID	3.9995	4.0050
4.	Main Rotor Grip (Strap retaining bolt holes)	ID	0.8750	0.8770
5.	Main Rotor Grip (Blade bolt holes)	ID	1.5200	1.5230
6.	Blade Bolt	OD	1.5170	1.5199
7.	Strap Retaining Bolt (Not illustrated)	OD	0.8730	0.8745
8.	Strap (Large hole)	ID	0.8750	0.8770
9.	Strap (Small hole)	ID	0.7500	0.7520
10.	Strap Retaining Pin	OD	0.7485	0.7495
11.	Retention Strap Fitting Pin Hole	ID	0.7500	0.7505
12.	Static Stop to Strap Fitting Clearance		0.0000	0.0040

206010-21-1F

Figure 2-19. Main Rotor Hub (206-010-100) — Limits Chart

Note

Bearing surface of 206-010-169-3 or 206-011-122-3 strap bolts are cadmium plated and the following procedure is not applicable.

(1) Touch-up of very small areas of the solid film lubricant is authorized. Clean area to be touched-up with clean cloth and MEK (item 17). Wipe dry with clean cloth before MEK evaporates. Apply solid film lubricant, (item 16), to required area. (Refer to Section I.)

(2) Strip bolts of solid film lubricant by scrubbing with MEK (item 17) if more than a very small area of film is damaged. (Refer to Section I.)

h. Replace bearings (38, figure 2-17) if damaged or if bearings do not operate smoothly.

i. Replace pins (9), strap fittings (8), strap (10) and grips (40) in accordance with MANDATORY RETIREMENT SCHEDULE. (Refer to Section I.)

j. Repair acceptable corrosion and mechanical damage as follows: (See figures 2-24 through 2-34 for limits before and after repairs.)

(1) Use fine to medium abrasive paper (item 15) to remove damage and final polish to a scratch-free surface with crocus cloth (item 13). Polish out score marks in holes and bores if damage and subsequent repair does not exceed 0.002 inch depth.

(2) Touch up brush cadmium (item 58) on previously plated repaired surfaces and alodine (item 6 or 32) to repairs on aluminum parts. (Refer to Section I.)

k. Install closures (46, figure 2-17) and buffer pads (49) on grips (40) as follows:

(1) Abrade closures and buffer pads in areas to be bonded with No. 180 grit abrasive paper (item 15) and wipe clean with a cloth moistened with naphtha (item 36). Wipe dry with a clean cloth. Clean bond areas on grips with naphtha and wipe dry.

Note

Protect parts with wrapping paper (item 98) if bonding cannot be accomplished immediately.

(2) Closures. Apply a thin even coat of sealing (item 7 or 115) to mating surfaces of closures and grips. Allow sealant to dry to a tacky stage (evidenced by its adhering but not transferring to the fingers when touched). Press parts together firmly. Ensure closure is firmly seated to grips. Fair sealant squeeze-out and air cure for 4 hours minimum. No edge voids are permitted.

(3) Buffer pads. Mix the EA9309 adhesive (item 121) per manufacturers instructions using 100 parts A to 22.4 parts B. As soon as possible after mixing adhesive apply to each faying surface, extending approximately 1/16 inch past edges diameters of buffer pads. Press parts together firmly, ensuring buffer pads are aligned with bushings in grips for blade bolts. Remove excess adhesive with MEK (item 17). Apply bond line pressure over the full bond region throughout the cure cycle. Cure for 24 hours at temperatures of 70° to 80°F (21° to 27°C) or for 60 minutes at 170°F to 190°F (77°C to 88°C). During cure cycle check for edge voids and fill as necessary.

l. Trunnion bearings (35, figure 2-17) inner bearing used on (206-010-100-7 and -9) main rotor hub assemblies may be replaced as follows:

(1) Support the rod end in the arbor press on a suitable size sleeve, I.D. slightly larger than O.D. of bearing being removed.

(2) Notch the sleeve to accept the rod end-aligning ear.

(3) Press on the outer race of bearing using a sleeve slightly smaller than the bearing outer race O.D., and press out bearing.

(4) Press and center a new bearing into the rod end.

(5) Support the assembly on the (T101539) staking tool anvil with the rod end aligning ear overhanging the cut-away portion of the anvil.

(6) Install the staking tool onto the anvil center post, with flat side of the staking tool parallel with inboard side of rod end aligning ear.

(7) Using a hydraulic press, stake the bearing so as to displace the pre-grooved outer race material into the chamfer of the rod end I.D.

(8) Turn the rod end assembly over on the anvil and stake the opposite side of the bearing.

Note

Ten tons (20,000 lbs) of steady applied pressure is required to properly stake the steel pre-grooved outer race. Shock loads (hammer) or excessive pressure could cause damage to bearing outer race housing.

2-35. REASSEMBLY — MAIN ROTOR HUB.

a. Reassemble and install (206-010-136) trunnion assembly as follows:

WARNING

Methyl-Ethyl-Ketone is toxic and flammable. Use only in well ventilated area. Do not use near open flame.

(1) Clean two adjusting screws (6, figure 2-18) and mating threads in trunnion (5) with methyl-ethyl-ketone (item 17). Loctite will be applied to these threads in a subsequent step. Install screws (6) thrust washers (7), and packing (8) in trunnion (5). Apply corrosion preventive compound (item 24) to inside diameter of two journal ends of trunnion.

(2) Apply lubricating oil (item 54) to OD of spindles on trunnion (5) and to bearings (14 or 35).

WARNING

Wear asbestos gloves when handling heated parts. Do not exceed 200°F (93°C).

(3) Apply heat lamp to pillow blocks (24 or 38) and install bearing (14 or 35).

(4) Coat packings (10 and 12) with lubricant (item 26) and install in retainer (11) with glyd ring (13). Install retainer in pillow blocks (24 or 38) and secure with retaining ring (9).

(5) Lubricate packings (20 and 22) with lubricant (item 26). Position sight glass (23) and packing (22) on pillow block (24). Position cover (21) and packing (22) on sight glass. Secure with two screws (15), lockwashers (16), flat washers (17) and stat-o-seals (19). Repeat for opposite pillow block. Do not install plugs (18) at this time.

(6) Insert trunnion (5) in yoke (30) and install pillow blocks (24 or 38) on spindles of trunnion as follows:

(a) Coat shanks (not threads) of pillow block bolts (25) with corrosion preventive compound (item 24) before installing into pillow blocks.

(b) Pillow blocks (24 or 38) using washers (26) and bushings (27). Insert bushing (27) in pillow blocks (24 or 38) and install bolts (25) with plastic face side of washers (26) facing inboard. Secure pillow blocks (24 or 38) to yoke (30) with washers (31) and nuts (32). Torque nuts (32) to 60 inch-pounds when using NAS1304-13 or 20-057-4-13 bolts (25). Torque EB048 nut (32) to 150 inch-pounds when using MS21250-04018 bolts (25).

(c) Apply slippage marks using torque seal or suitable paint for marking across bolt heads to pillow block surfaces and across nuts to yoke surfaces including washers.

(d) Five to ten hours after installation of pillow block hardware, check and retorque EB048 nuts when using MS21250-04018 bolts to 150 inch-pounds plus friction, as required, then every 100 hours thereafter.

CAUTION

Anytime a bolt and/or nut at an attachment joint is found loose (less than 150 inch-pounds), the bolt and nut may be retorqued. If low torque was greater than 50 inch-pounds, bolt may be retained in service, after retorque. If less than 50 inch-pounds, they may be retorqued, but must be replaced within the next 25 operating hours. Replace nuts when friction is less than 3.5 inch-pounds.

(e) Pillow blocks (24 or 38) using bushings (28, view B): Insert bushings (28) in pillow blocks (24 or 38) and secure to yoke (30) with bolts (25), washers (31), and nuts (32). Refer to steps (b) through (d) for torque requirements.

(f) Secure heads of screws (15) to heads of bolts (25) with 0.032 inch lockwire (item 19). Temporarily install plugs (18) with new packings (20) in covers (21).

(7) Lubricate packings (37 and 39) with lubricant (item 26). Position packing (37) on filler plug (36) and install in pillow block (38). Position packing (39) on plug (40) and install in pillow block (38).

(8) Install lubrication fitting (41) in plug (40).

b. Place main rotor hub on work bench and support on a pedestal support.

c. Center trunnion (5) on pitch change axis of yoke (30) within 0.003 inch as follows:

(1) Position yoke on a surface plate. Insert trunnion centering dowel work aid into trunnion. Dowel must be line-to-line fit in trunnion with no more than 0.001 inch clearance. If dowel is a loose fit it is either undersize or splines of trunnion are worn. (Refer to Section I for fabrication of main rotor trunnion centering dowel.)

(2) Measure between inboard surface of pillow block and trunnion centering dowel and record as dimension A. (Refer to figure 2-10A.) Measure opposite side and record as dimension B. Dimension A and B must be equal within 0.003 inch or less.

(3) Reposition trunnion, as necessary with adjusting screws to obtain equal readings at dimensions A and B within 0.003 inch or less. (Refer to figure 2-10A) Torque each adjusting screw 115 to 130 inch-pounds. Recheck trunnion centering after each adjustment.

(4) Check trunnion rotational preload. Attach spring scale to center of blade bolt and pull scale vertically to obtain maximum reading of 2.7 pounds, disregarding initial breakaway force.

Note

If trunnion rotational preload exceeds limit, disassemble and check for the following: No lubricant on faces of thrust washers, or surface roughness is present between mating surfaces of screws, thrust washers or pillow blocks. Surface finish must be 32 RMS or better and well coated with grease.

(5) After trunnion (5) is adjusted, apply primer (item 85) and sealant (item 134) to inboard ends of screw (6, figure 2-18) and to threaded area of trunnion journal as follows:

CAUTION

Do not move screws (6).

(a) Clean heads of screws (6) and threads in journal of trunnion (5) by wiping surfaces with a cloth moistened with safety solvent (item 135).

(b) Apply a wet film of primer, (item 136) with the use of a cotton swab to heads of screws (6) and threads in journal of trunnion (5). Allow two to three minute flash off of primer prior to sealant application.

(c) Apply sealant (item 134) to heads of screws (6) and threads area. The sealant will be drawn into thread area by capillary action sealing screws in place. Complete sealing of screws is assured when a purple ring of sealant remains around screw heads. Allow sealant to cure at room temperature 70° to 80°F (21° to 27°C) for 60 to 90 minutes.

(d) Apply film of corrosion preventive compound (item 24) to splines of trunnion (5). Fill cavities for adjusting screws (6) with sealant (item 7).

d. Position yoke (1, figure 2-17) on work bench and assemble pitch horns (19) and grips (40 or 72) as follows:

Note

Four short bolts may be installed in static stop bolt holes which will support main rotor hub above work table. (Refer to figure 2-10A)

(1) Thoroughly clean the following parts with naphtha (item 36) and dry thoroughly. Faying surfaces of yoke (1, figure 2-17), pins (9), rings (7), and strap fittings (8), and inside diameters of holes in each end of straps (10).

(2) Apply corrosion preventive compound (item 89) to faying surfaces of yoke (1), pins (9), rings (7), strap fitting (8), rectangular holes, strap pin holes and outside diameter of fitting bores and faces. Do not allow corrosion preventive to contact inboard flanged surface of fittings in area to be sealed. (Refer to figure 2-7 , Note 3.) Also apply corrosion preventive compound to pin and bolt bores in straps (10, figure 2-17).

CAUTION

Do not intermix 206-010-123-1 or -3 pins (9). For replacement use two 206-010-123-3 pins (9).

(3) Position straps (10) in journal ends of yoke (1) with small hole in strap inboard. Install rings (7) on strap fittings (8) and install pins (9) through fittings and straps. Pull straps (10) outboard in yoke (1) to seat strap fittings (8).

(4) Apply a bead of sealant (item 7) around exposed inboard flanged end of strap fittings (8) and mating surface of yoke (1). (Refer to figure 2-7 ', Note 3.) Fully seat strap fittings (8, figure 2-17) in yoke (1) by pulling outboard on straps (10), check that clearance between strap fittings and yoke is filled with sealant and that strap fitting is aligned for installation of static stop (3).

Note

Remove bolts from static stop bolt holes, if installed.

(5) Install static stop (3), rubber stop (6), and shims (2). Use shims (2), as required, to obtain 0.000 to 0.004 inch pinch fit between static stop (3)

and strap fitting (8). Install bolts (5), washers (4), and torque 175 inch-pounds. Do not lockwire bolts at this time for static stop must be repositioned after installation of main rotor hub on helicopter.

(6) Install retainers (25), packings (24 and 27), excluder (26) as follows:

(a) Clean grooves in retainer (25) and mating surface area in bore of grips (40 or 72) with cloths dampened with naphtha (item 36) and a sharp plastic scraper.

(b) Fabricate main rotor hub excluder mandrel and packing spoon work aids. (Refer to Section I for fabricating work aid.)

(c) Insert small end of excluder work aid mandrel into inboard end of retainer (25, figure 2-17). Position new excluder (25) on mandrel with lip pointing outboard. Slide excluder onto retainer groove with lip of excluder pointing toward packing (4, figure 2-8).

(d) Use fabricated packing spoon to slide packing (27, figure 2-17) under lip of excluder (26).

(e) Apply a coating of sealant (item 7) to outboard groove in retainer (25) and install new packing (24) in groove. Recoat packing with sealant. Apply a film of sealant to mating surfaces in end of bore inside grips (40 or 72). (Refer to figure 2-7 , detail C.)

(f) Install retainer (25, figure 2-17) in grip (40 or 72), with packing (24) end first, until fully seated in end of grip bore.

CAUTION

During sealant cure do not heat grips above 200°F (93°C). Damage to packings and excluder will occur.

(g) Cure sealant for 72 hours at 70°to 80°F (21° to 27°C). Alternate cure is 1 hour at 70° to 80°F (21° to 27°C) plus 2 hours at 175°F (79°C).

(7) Hand pack bearings (38) with grease (item 21) and coat bore of grips (40 or 72).

CAUTION

Do not heat grips above 200°F (93°C).

(8) Apply heat lamp to bearing area in grips (40 or 72) and install bearings (38) with spacers (39).

(9) Assemble both pitch horns (19) and position on yoke as follows:

(a) Coat faying surfaces of pitch horn trunnion and pitch horns (19) with corrosion preventive compound (item 89).

(b) Using pitch horn trunnion work aid, install trunnion in pitch horn with slots on trunnion barrel aligned with holes in pitch horn. (Refer to Section I.) Coat shank of bolts (33) with corrosion preventive compound (item 89) and install washers (34) and nuts (36). Torque nuts 60 inch-pounds.

(c) Install washers (69 and 70) with bolt (68) and nut (67) or plate (73), washers (74 and 75) with bolts (77) and nuts (76). Torque nuts (67 or 76) 50 to 70 inch-pounds.

(d) Apply a film of sealant (item 7) to outside diameter of seal (14) and mating inside diameter of pitch horn (19). Press seal into outboard face of pitch horn (19) with lip of seal pointing to grip side.

(e) Lubricate lips of seals (14), packings (24) and excluder (26) with grease (item 21). Also apply grease film to yoke (1) at inside diameter of journal that will mate with excluder (26).

(f) Install packing (24) in groove on outboard face of pitch horn (19). Carefully install pitch horn on yoke journal with seal (14) on surface of wear sleeve.

e. Install grips (40 or 72) on yoke (1) as follows:

(1) Coat yoke spindles and bearings (38) liberally with grease (item 21). Coat faying surfaces of grip and strap with corrosion preventive compound (item 89).

(2) Carefully position grip to yoke and rotate onto spindle, engaging outboard end of straps (10) into square hole inside grip until bolt hole for strap bolt (51) is aligned.

(3) Thoroughly clean inside diameter of strap bolt holes in lugs on grips (40 or 72) with naphtha (item 36). Dry thoroughly. Apply corrosion preventive compound (item 89) to inside diameter of strap and grip latch bolt holes and strap bolts. Install strap bolts (51) from trailing edge side into lugs on grips (40 or 72) engaging straps (10) and aligning notch in shoulder of strap bolts with pins (50) in grips (40 or 72). Clean threads of strap bolts with naphtha (item 36) to remove corrosion preventive compound from threads. Install washers (45) and nuts (44) on leading edge side of strap bolts (51) and torque nuts 180 foot-pounds using T101554 socket wrench.

(4) Align holes on pitch horn with holes in grip and install bolts (31), washers (32), and nuts (53). (Refer to figure 2-17 for bolt direction and washer position.) Torque nuts (53) 120 inch-pounds.

(5) Install latches (41), and nuts (42) on strap bolts (51). Do not torque nuts (42) at this time. This will be accomplished during main rotor blade installation and alignment.

Note

Springs (43) are no longer required and may be omitted.

f. Install blade bolts (54) with washers (48 and 52) and nuts (47). Do not torque nuts unless main rotor blades are installed.

g. Install spacer washer (33, figure 2-18) with screws (34) to trunnion (5) if flap restraint kit is not installed.

h. Install flap restraint (4, figure 2-18) or spacer washer (33) and screws (1 or 34), as required. (Refer to paragraph 2-25)

i. Paint main rotor hub in accordance with paragraph 2-45 and table 2-5 .

j. Lubricate main rotor hub in accordance with paragraph 2-36 .

2-36. LUBRICATION — MAIN ROTOR HUB.

a. Oil Lubrication.

(1) Fill bearing cavities at plug (20, figure 2-17) or fitting (57), and plug (18), figure 2-18) with lubricating oil (item 50). Work out all air bubbles and fill until sight glasses (17 or 60, figure 2-17) and sight glasses (23, figure 2-18) are one-half full. Verify actual presence of oil in sight glasses. Install plug (20, figure 2-17) or fittings (57) and plugs (18, figure 2-18). Check main rotor hub for leaks.

(2) Secure plugs (18) to screws (15) with 0.032 inch lockwire (item 19).

b. Grease lubricated.

CAUTION

If washers are installed on pitch horn, loosen before lubricating grips.

(1) Lubricate grip (72) with grease (item 82) through lubrication fitting (71).

Note

Inject grease slowly so as not to displace end cap or seal.

Purge grip cavities until grease is purged past washers, or relief valves.

(2) Lubricate pillow block cavities until grease is purged past seals.

Note

After initial ground run and tracking, purge grease at grips and pillow blocks to ensure cavities are completely filled. Repeat lubrication requirements after the first flight and each 50 hours thereafter.

Part 2
Overhaul - Main Rotor Hub Assembly (P/N 206-011-100 -021 and prior)

Note

For Main Rotor Hub Assembly (206-010-100) refer to Overhaul, Part 1.

Note

Screen records and retire those components which have accumulated maximum operating time or will accumulate maximum operating time before next scheduled overhaul. (Refer to Section I, MANDATORY RETIREMENT SCHEDULE.)

Note

Limits Charts, listing critical dimensions of parts, are provided as a convenience in determining closeness of fit between mating parts. They also provide replacement dimensions of worn parts. It is not intended that all dimensions listed on Limits Charts are to be checked out as a prescribed overhaul procedure. Parts that give evidence of wear or physical damage will be checked dimensionally.

Note

For consumable materials item numbers, refer to Section I, CONSUMABLE MATERIALS, Table 1-1 .

2-37. MAIN ROTOR HUB ASSEMBLY — OVERHAUL.

CAUTION

Do NOT allow main rotor grips or yoke to rotate on pitch change axis. If grip or yoke is allowed to rotate on the pitch change axis beyond 90 degrees, the main rotor grip retention strap/s must be replaced. Secure main rotor blade grip through the pitch horns to yoke with lockwire or suitable work aid.

The special tools required for overhaul of the main rotor hub assembly are contained in table 2-3 .

Table 2-3. Special Tools for Main Rotor Hub — Overhaul

PART NUMBER	NOMENCLATURE
T101491	Puller
T101554*	Socket, Main Rotor Strap Retention bolt
No Number*	Pressing Plate, Trunnion Bearing Inner Race
No Number*	Pressing Plug, Trunnion Bearing Inner Race
No Number*	Mandrel, Main Rotor Hub Excluder

Table 2-3. Special Tools for Main Rotor Hub — Overhaul (Cont)

PART NUMBER	NOMENCLATURE
No Number*	Trunnion Puller
No Number*	Grip Retainer Remover
No Number*	Wear Sleeve Installation

*Locally fabricated work aids (See figure 1-13).

2-38. DISASSEMBLY — MAIN ROTOR HUB.

a. Place main rotor hub on a work bench or stand for disassembly and layout of parts.

b. Remove blade bolts (7, figure 2-20) by removing nuts (1), and washers (2 and 8). Discard nuts (1).

c. Remove and disassemble both grips (14) as follows:

(1) Remove nuts (4), blade latches (5), and springs (6).

(2) Remove nuts (12) and washers (13) from strap bolts (3) on leading edge side of grips (14), then remove strap bolts. Use (T101554) socket wrench to remove nut (12) and discard. (See figure 1-13 , for fabricating T101554 socket wrench.)

(3) Remove nuts (11, figure 2-20), washers (10) and bolts (9). Pull grips (14) outboard and allow oil to drain from 206-011-100-17 main rotor hub. Remove grips and pitch horns (30) from yoke (46). Do not allow hub weight to rest on shield (42); support yoke with pieces of wood.

(4) Cut and remove lockwire from bolt (68) at static stops (70). Remove bolts (68), washers (69), static stops (70), rubber stops (67), and shims (71).

(5) Trim sealant bond with a plastic scraper. Push straps (41) inboard in yoke (46) to break sealant around strap fittings (66). Remove pins (64), rings (65), strap fittings, and straps.

(6) Insert a wooden dowel or aluminum tube (2.093 to 2.125 inches in diameter by 12 to 14 inches in length, see figure 1-13 for fabrication and use of work aid) into retainer (34, figure 2-20) Rock dowel or tube to break sealant around retainers, then remove from grips. Remove excluder (35) and packings (33 and 36) from retainer (34).

WARNING

Wear asbestos gloves when handling heated parts. Do not exceed 200°F (93°C).

(7) Apply heat lamp to grips (14 or 72) and remove bearings (37) and spacer (38) from each grip.

(8) Remove closures (39) and two buffer pads (40) from each grip (14). Do not remove pins (32).

(9) Trim sealant around shields (42) on spindles of yoke (46). Remove shields.

CAUTION

Ensure that cutting tool does not cut through wear sleeve (43) or damage the yoke (46).

(10) Remove wear sleeves (43) by cutting a groove across the wear sleeve and striking the groove with a blunt, wedge-shaped instrument. Inspect yoke (46) for possible damage resulting from wear sleeve removal.

d. Disassemble both pitch horns (30 or 76) as follows:

(1) Oil lubricated hubs.

(a) Remove nuts (15), lockwashers (16), washer (17), packings (18 and 21), and reservoir (19) from outboad side of pitch horns (30 or 76). Remove bolts (24), washer (17), and packings (18 and 22) from the inboard side. Discard all packings.

(b) Remove nuts (29), washers (27), bolts (26), and trunnion (28) from each pitch horn (30). Use work aid to remove trunnions.

Note

Fabrication of a work aid is recommended to allow removal of trunnion with less possibility of damage to pitch horn. (See figure 1-13) Insert tangs of tool into slot and tighten screw until trunnion can just be pulled out. Release screw tension and remove tool.

(2) Oil lubricated hubs modified by Technical Bulletin 206-76-6 or 206-78-5 to use grease.

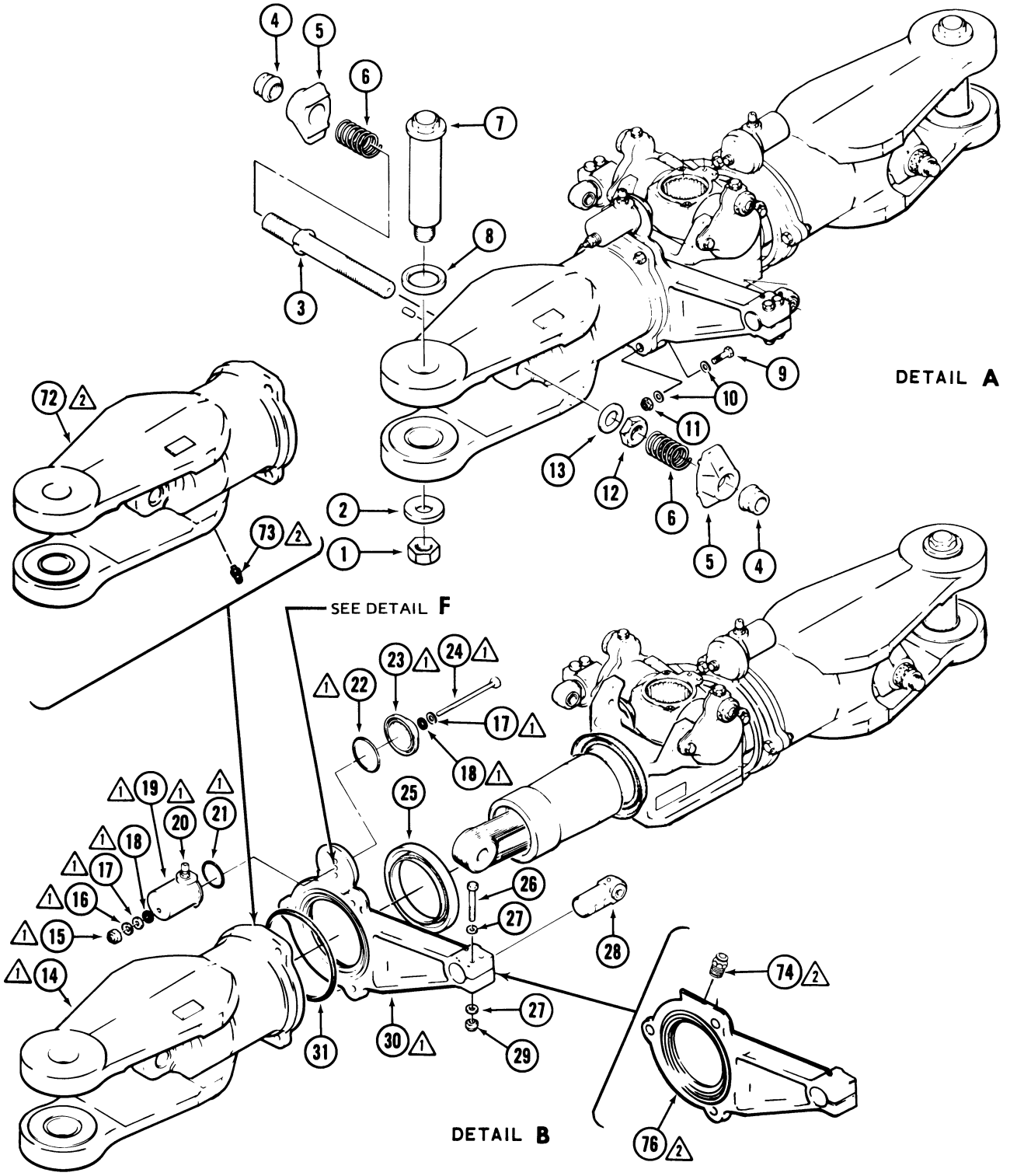

Figure 2-20. Main Rotor Hub — Overhaul (Sheet 1 of 3)

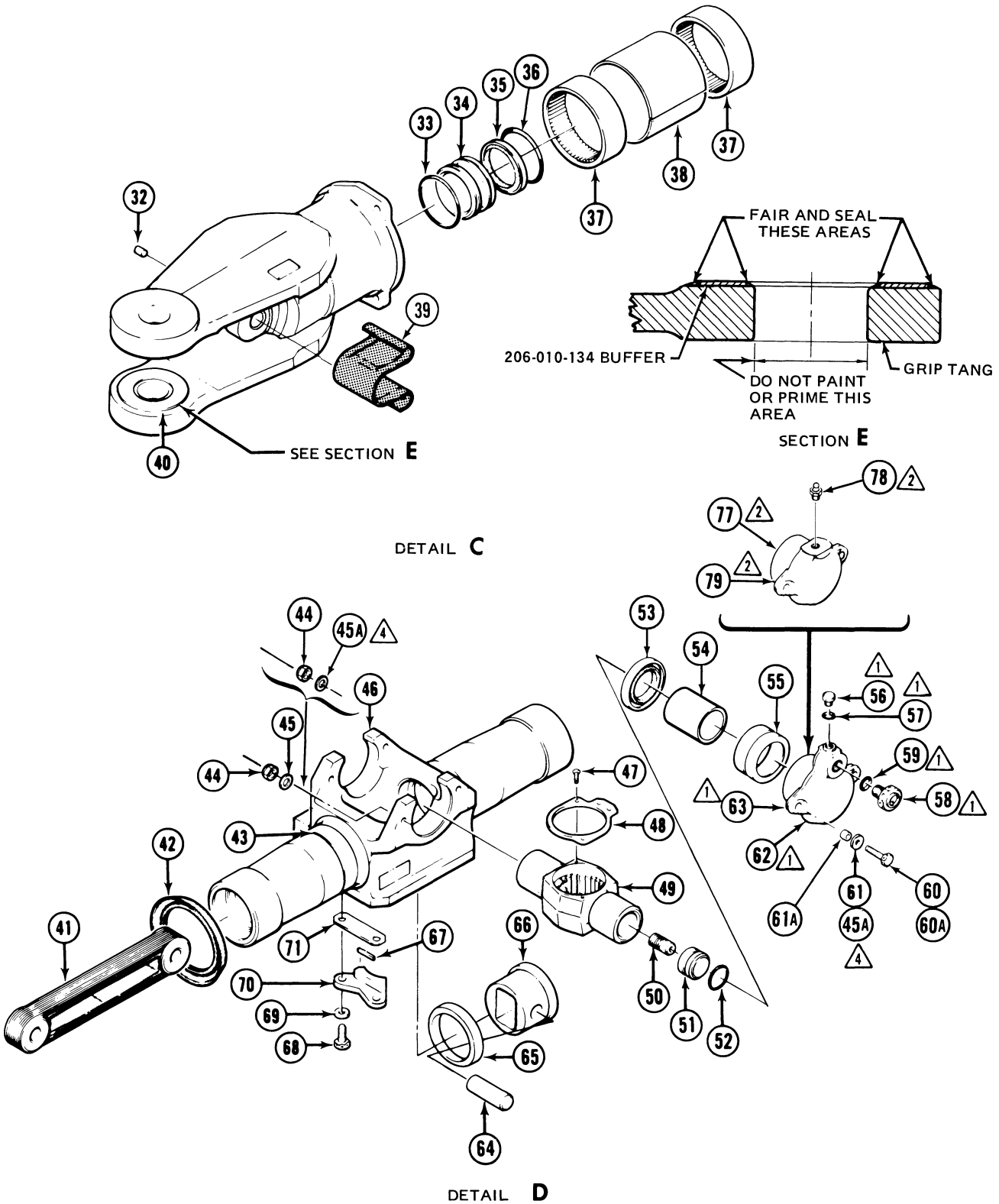

Figure 2-20. Main Rotor Hub — Overhaul (Sheet 2 of 3)

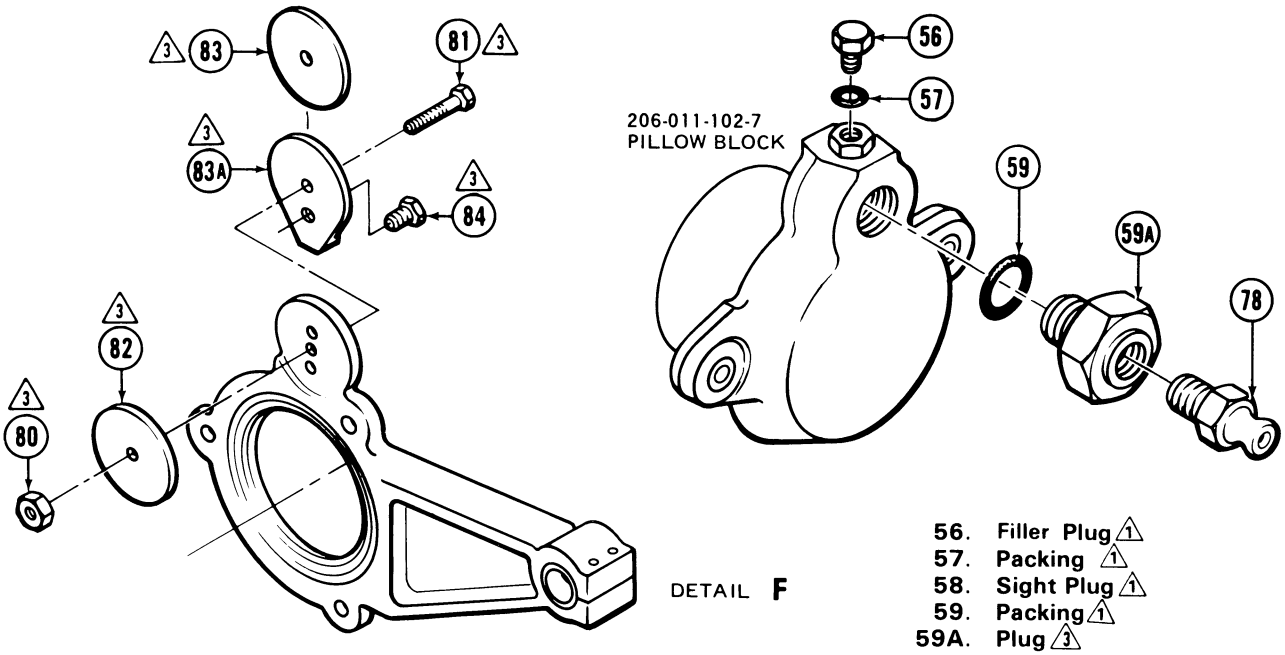

1. Nut
2. Washer
3. Strap Bolt
4. Nut
5. Latch
6. Spring
7. Blade Bolt
8. Washer
9. Bolt
10. Washer
11. Nut
12. Nut
13. Washer
14. Grip (1)
15. Nut (1)
16. Lockwasher (1)
17. Washer (1)
18. Packing (1)
19. Reservoir (1)
20. Fitting (1)
21. Packing (1)
22. Packing (1)
23. Sightglass (1)
24. Bolt (1)
25. Seal
26. Bolt
27. Washer
28. Trunnion
29. Nut
30. Pitch Horn (1)
31. Packing
32. Pin
33. Packing
34. Retainer
35. Excluder
36. Packing
37. Bearing
38. Spacer
39. Closure
40. Buffer Pad
41. Strap
42. Shield
43. Wear Sleeve
44. Nut
45. Washer
45A. Washer (4)
46. Yoke
47. Screw
48. Washer
49. Trunnion
50. Adjusting Screw
51. Thrust Washer
52. Packing
53. Seal
54. Inner Race
55. Bearing
56. Filler Plug (1)
57. Packing (1)
58. Sight Plug (1)
59. Packing (1)
59A. Plug (3)
60. Bolt
60A. High Tensile Bolt
61. Washer
61A. Bushing
62. Pillow Block (1)
63. Teflon Pad (1)
64. Pin
65. Ring
66. Strap Fitting
67. Rubber Stop
68. Bolt
69. Washer
70. Static Stop
71. Shim
72. Grip (2)
73. Lubrication Fitting (2)
74. Relief Valve (2)
75. Deleted.
76. Pitch Horn (2)
77. Pillow Block (2)
78. Lube Fitting (2)
79. Teflon Pad (2)
80. Nut (3)
81. Bolt (3)
82. Washer (3)
83. Washer (3)
83A. Plate (3)
84. Vent plug (3)

NOTES:
(1) Used on 206-011-100-17 Main Rotor Hub.
(2) Used on 206-011-100-21 Main Rotor Hub.
(3) Used on main rotor hub (206-011-100-9 through -17) to permit grease lubrication.
(4) Used with MS21250-04018 high tensile bolt.

206011-223

Figure 2-20. Main Rotor Hub — Overhaul (Sheet 3 of 3)

(a) Remove nut (80), bolt (81), washer (82), and washer (83 or 83A) plate vent from pitch horn (30).

(3) Press seal (25, figure 2-20) from pitch horns (30 or 72). Use caution to prevent damage to pitch horns.

e. Remove and disassemble main rotor hub (206-011-113) trunnion (49) as follows:

(1) Remove screws (47) and spacer washer (48) from trunnion (49), if installed.

(2) Cut lockwire and remove filler plug (56) and sight plug (58) from each pillow block (62). Discard packings (57 and 59).

(3) Remove nuts (44) and washers (45 or 45A) from inboard side of yoke (46). Remove bolts (60), washers (61 or 45A), bushings (61A), and slide pillow blocks (62 or 77) from trunnion (49). Light tapping with a soft faced mallet will aid in the removal of the pillow blocks.

(4) Remove trunnion (49) from yoke (46) and turn adjusting screws (50) clockwise to push thrust washers (51) and packings (52) out of journal ends of trunnion. Remove adjusting screws (50) by turning a counterclockwise direction. Discard packing (52).

(5) Remove bearing inner races (54) from spindles of trunnion (49) as follows:

Note

A standard bearing removal plate may be used to remove trunnion bearing inner race. (Refer to figure 2-21) Use care so that tool does not contact trunnion spindles.

(a) Fabricate 206-011-111 trunnion bearing inner race pressing plate and pressing plug. (See figure 1-13 for fabrication instructions.)

(b) Remove aged sealant from inboard end of spindle or trunnion (49, figure 2-20) and inner races (54).

(c) Install fabricated pressing plate around spindle of trunnion (49). Radius groove on pressing plate must mate with radius groove on trunnion and the 1.743 inch undercut should provide a close fit to inner races (54). (See figure 2-21)

CAUTION

Pressing plate is a close tolerance fit to spindle of trunnion and to inner races. Ensure that pressing plate does not contact spindle during pressing operation.

(d) Place trunnion, pressing plate and pressing plug on a hydraulic press, with plate supported by blocks. (See figure 2-21).

(e) Apply pressure to pressing plug until inner race is pressed from spindle of trunnion. Ensure that trunnion is not allowed to drop when spindle clears inner race. Etched reference line of pressing plug is the same length as inner race and should be used as a guide during pressing operations. Repeat steps (b) through (e) for removal of inner race from opposite trunnion spindle.

(6) Position the filler plug (60, figure 2-20) end of pillow blocks (62) in a smooth faced vise and remove seal (53) using (T101491) puller or other suitable means. (See figure 2-22). Apply heat lamp to pillow block as required and remove bearing (55, figure 2-20) by tapping pillow block with soft faced mallet.

2-39. CLEANING — MAIN ROTOR HUB.

Note

Provide adequate corrosion protection if parts are not overhauled immediately.

a. Clean parts with solvent (item 12). Dry parts with filtered, compressed air. Do NOT allow bearings to rotate while drying.

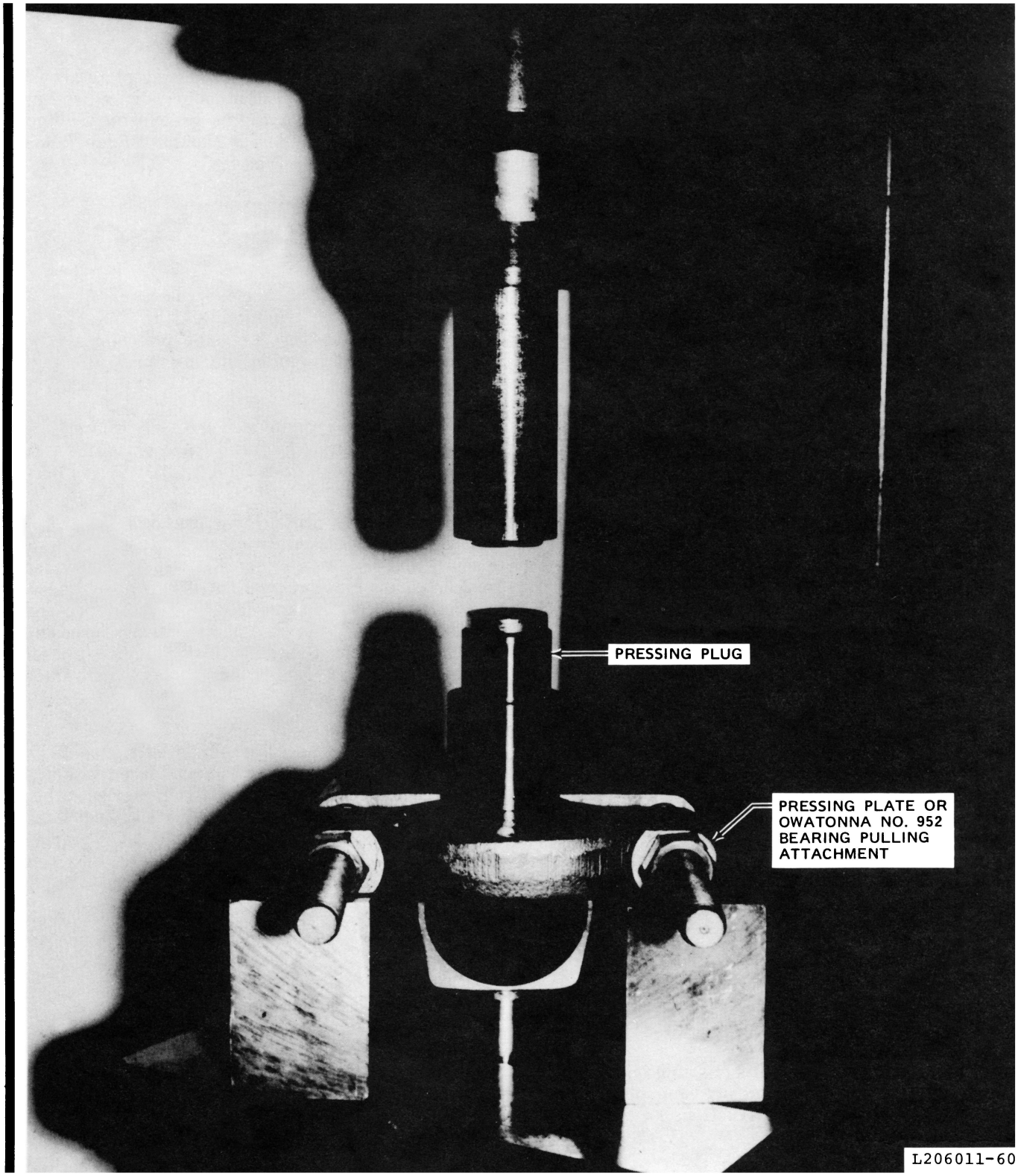

Figure 2-21. Trunnion Bearing Inner Race Removal — Tool Application

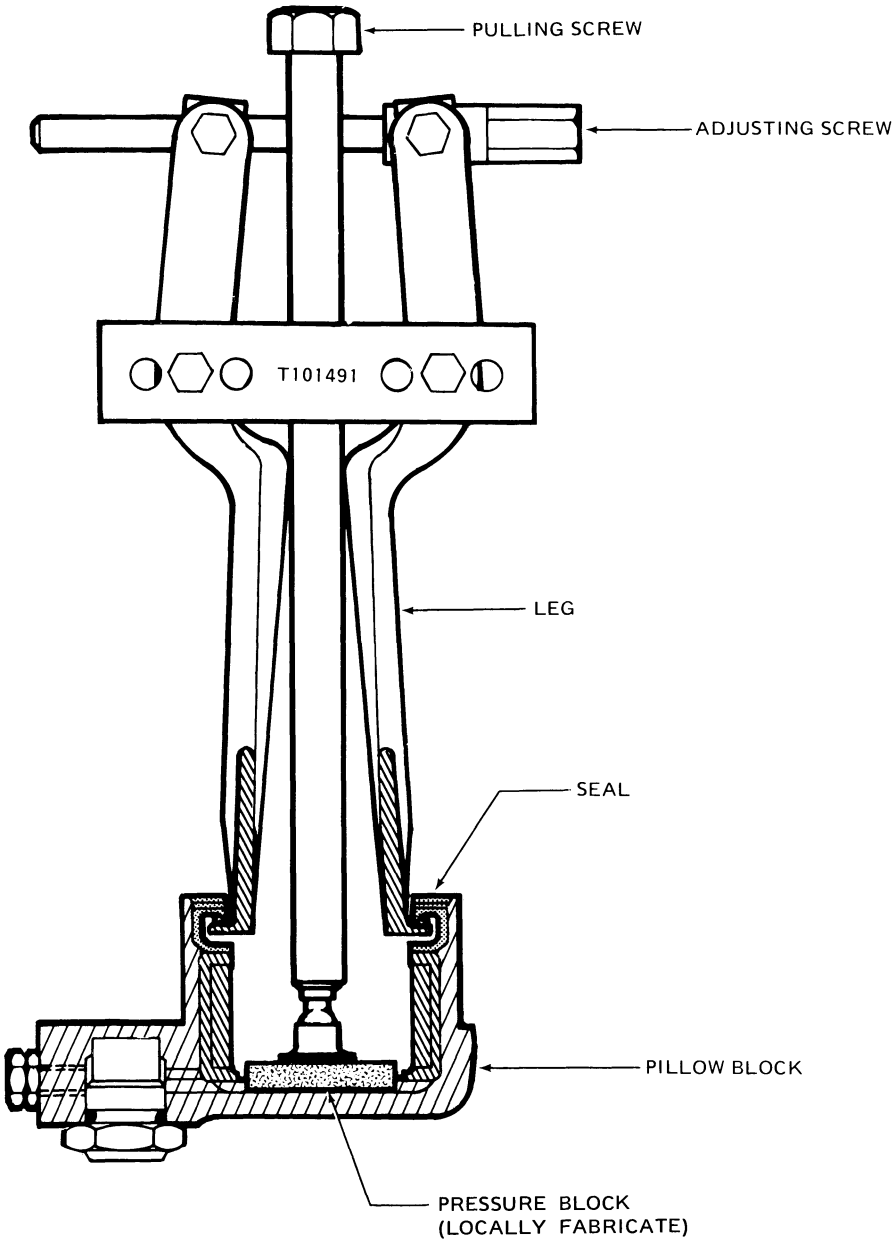

206011-42A

Figure 2-22. Pillow Block Seal Removal — Tool Application

WARNING

Methyl-Ethyl-Ketone is toxic and flammable. Use only in well ventilated area. Do not use near open flame.

b. Clean sealant and adhesives from parts with plastic scraper and methyl-ethyl-ketone (item 17, table 1-1).

c. Clean teflon surfaces with a clean cloth and methyl-ethyl-ketone (item 17, table 1-1).

2-40. INSPECTION AFTER DISASSEMBLY — MAIN ROTOR HUB. Visually inspect all parts for damage that would require replacement. Discard damaged parts.

2-41. SPECIAL INSPECTION — MAIN ROTOR HUB. The following special inspection procedures are applicable to (206-010-100 and 206-011-100) main rotor hubs.

a. If the accompanying records and/or physical appearance of components indicates that component has been subjected to an accident or incident such as, overspeed, overtorque or sudden stoppage, the following evaluation criteria should be accomplished to determine disposition of the component. Should the component meet the following requirements, proceed with normal overhaul inspection requirements. (Refer to paragraph 2-42) Any variation from required dimension is cause for rejection of the part.

b. Visually inspect detail parts for any apparent damage or abnormal appearance. Visual defects that are cause to scrap the hub assembly are:

(1) Any part of the main rotor mast remaining in the trunnion.

(2) Yoke obviously bent outside of limits as stated in subparagraph d. (1) below.

Note

Obvious deformation of any other part would not necessarily cause the entire hub to be scrapped.

c. Inspect parts for surface damage in accordance with normal overhaul inspection limits. (Refer to paragraph 2-42)

d. Dimensionally check for indications of permanent deformation or damage to the parts specified below. If a dimensional discrepancy is found on any part, scrap only that part, and in addition scrap the straps, strap fittings, strap bolts and pins, unless otherwise stated.

(1) Yoke (206-010-101).

(a) Check the machine surfaces of yoke with a straight edge and replace hub assembly if the deviation is more than 0.001 inch.

(b) Inspect pillow block bolts for shear offset (straightness) and replace hub assembly if any evidence of bolt yielding is found.

(c) Check yoke precone angle and spanwise straightness with a straight edge. Yoke lower surface is not included in this inspection. Replace hub assembly if more than 0.001 inch per inch deviation is found.

(2) Grip.

(a) Blade bolt hole and strap bolt hole must be round within 0.001 inch. Elongation of blade bolt hole in excess of 0.002 inch is cause to scrap entire hub assembly.

(b) The grip to pitch horn mating surface must be checked for deformation on a surface plate. Surface must be true within 0.0015 inch.

(3) Pitch horn.

(a) The horn to grip surface must be checked for deformation on a surface plate. Surface must be true within 0.002 inch.

(b) The inboard surface of the trunnion bearing lug must be parallel to the horn to grip surface within 0.0025 inch per inch.

(4) Blade bolt.

WARNING

Methyl-Ethyl-Ketone is toxic and flammable. Use only in well ventilated area. Do not use near open flame.

(a) Remove dry film lubricant by scrubbing bolt with MEK (item 17).

(b) Measure bolt diameter in at least six locations. If diameters vary more than 0.0007 inch, scrap blade bolts.

(c) Roll bolt on a surface plate to check for indications of bending. If bolt shank is not straight within 0.0015 inch, scrap bolt.

(5) Strap retention bolt.

(a) On strap retention bolt remove dry film lubricant by scrubbing with MEK (item 17).

(b) Measure bolt diameter in more than six locations. Diameter should not vary in excess of 0.0008 inch. If bolt diameters exceed 0.0008 inch, remove cadmium plate and remeasure. If out-of-round exceeds 0.0005 inch scrap bolt. If bolt diameter is acceptable, touch up brush cadmium plate on bolt, as required. (Refer to paragraph 1-58)

(c) Roll the bolt on a surface table to check for indications of bending. The bolt shank must be straight within 0.0015 inch.

(6) Trunnion

(a) Mount trunnion in vee blocks with only the outer 0.10 inch of each bearing surface resting on the vee block. Mount a dial indicator at the inboard edge of bearing surface of each side of trunnion. Rotate the trunnion, neither indicator should read in excess of 0.0011 inch.

(b) Perform a magnetic particle inspection on trunnion as follows:

Note

Use the wet, continuous, fluorescent method. Use of fluorescent coated particles with ultra violet light is mandatory. The length of any indication shall be determined by the residual method of magnetization.

1 Thoroughly demagnetize all parts after inspection.

2 Use the following general formula for determining amperage (meter): Ampere turns divided by number of coil turns (on coil nameplate) = Amperes.

EXAMPLE: For a five (5) turn coil, 11,000 ampere turns ÷ 5 coil turns = 2,200 amperes.

Note

If ac magnetic particle inspection equipment is used, use 60 percent of dc amperes specified.

3 Thoroughly degrease trunnion.

4 Place trunnion longitudinally between contact heads of the machine. Pass 2,000 amperes through trunnion.

5 Inspect completely for indications.

6 Place a 1.0 inch diameter central conductor through internal spline of trunnion and the control conductor between contact heads of the machine. Pass 1,000 amperes through central conductor.

7 Inspect completely for indications.

8 Rotate trunnion 180 degrees around central conductor and pass 1,000 amperes through central conductor.

9 Inspect completely for indications.

10 Place trunnion longitudinally within and at the side of the coil. Magnetize trunnion with 15,000 ampere turns.

11 Inspect completely for indications.

(7) Static stop.

(8) Inspect static stop for cracks or deformation in mast contact area. Replace stop if damaged.

2-42. NORMAL INSPECTION — MAIN ROTOR HUB.

Note

If the accompanying records and/or physical appearance of components indicates that component has been subjected to an accident or incident such as overspeed, overtorque or sudden stoppage, refer to paragraph 2-41 , SPECIAL INSPECTION for evaluation criteria.

a. Inspect hub components for mechanical and corrosion damage in accordance with limits of figures 2-24 through 2-34C. Score marks in holes and bores shall not exceed 0.002 inch in depth for one-fourth the circumference, except as noted in figures 2-24 through 2-34C. See figures 2-35A and 2-35B for application of corrosion preventive compound (item 24, table 1-1).

b. Inspect all bearings for smooth operation, elling, spalling, damaged roller or races.

c. Inspect oil sight glasses (23, figure 2-20) and sight plug (58) for cracks, crazing, or discoloration.

d. Inspect shield (42) for cracks and that sealing lip of shield is not bent or distorted.

e. Inspect threaded areas for damage. Damage and subsequent repair shall not exceed limits of figures 2-25 through 2-34C.

f. Inspect teflon pads (63, figure 2-20). Replace pad if worn through or severe fretting has occurred.

g. Inspect bearing journals of yoke (46) for damage, such as spalling or scoring in the roller path. If wear limits of figure 2-35 are exceeded, replace yoke.

Note

It is not necessary to remove primer from grip to perform fluorescent penetrant inspection.

h. Inspect grip (14, figure 2-20 and pitch horn (30) by fluorescent penetrant method.

i. Refer to Section I, SPECIAL INSPECTION-ACCEPTANCE STANDARDS for magnetic particle or fluorescent penetrant inspection criteria.

j. Inspect parts dimensionally if visual indication of wear is found. (See figure 2-35 .)

k. Inspect static stop (70, figure 2-20) visually for damage to mounting holes or surface adjacent to strap fitting.

All data on pages 2-63 and 2-64 deleted, including figure 2-23, sheets 1 and 2

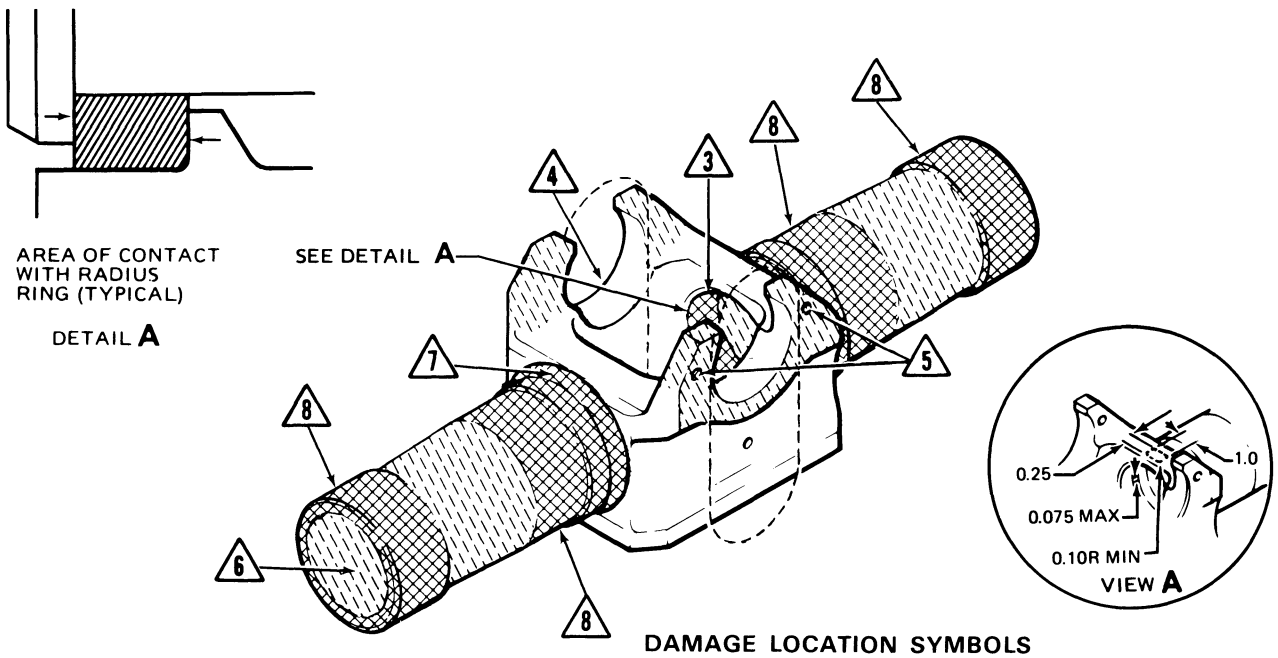

DAMAGE LOCATION SYMBOLS

TYPE OF DAMAGE	MAXIMUM DAMAGE AND REPAIR DEPTH		
MECHANICAL AND CORROSION	0.002 in. before and after repair	0.010 in. before and after repair	0.020 in. before and after repair
MAXIMUM AREA PER FULL DEPTH REPAIR	0.50 sq. in.	0.40 sq. in.	Not critical
NUMBER OF REPAIRS (1) (2)	Two per segment, no overlap	Two per segment, no overlap	Not critical
EDGE CHAMFER	0.030 in.	0.030 in.	0.040 in.

(1) Repairs should not overlap.

(2) Coat all repairs except those on yoke spindles with brush cadmium.

(3) Repair on contact area shown in detail A shall not exceed 1/2 of any quadrant.

(4) Nicks, scratches, or tool marks are not permitted in pillow block bores. Polish with a circular motion to a bright surface.

(5) Bore damage not to exceed 0.002 inch for one-fourth circumference.

(6) Bore damage not to exceed 0.002 inch for local corrosion. Total corrosion damage area of 0.4 square inch and no limit on number of repairs in area.

(7) Fillet radius damage not to exceed 0.002 inch.

(8) False brinelling is acceptable to a maximum depth of 0.0015 inch on bearing journals. No limit to amout of area of false brinelling marks. Do not attempt to polish out marks.

206011-224

Figure 2-24. Main rotor yoke — damage limits

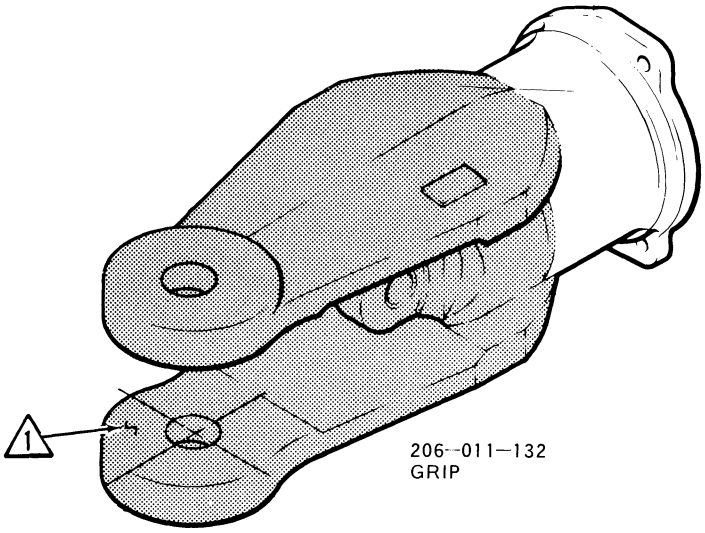

DAMAGE LOCATION SYMBOLS

TYPE OF DAMAGE	MAXIMUM DAMAGE AND REPAIR DEPTH	
MECHANICAL	0.005 in. before and after repair	0.010 in. before and after repair
CORROSION	0.0025 in. before and 0.005 in. after repair	0.005 in. before and 0.010 in. after repair
MAXIMUM AREA PER FULL DEPTH REPAIR	0.15 sq. in.	0.50 sq. in.
NUMBER OF REPAIRS	Not critical	Not critical
EDGE CHAMFER	0.005 in.	0.040 in.
BORES	0.001 inch for 1/4 circumference	

NOTE: 1 **The repaired area of grip surfaces mating with the main rotor blade should not exceed one-half the area of any quadrant.**

206011-122-1D

Figure 2-25. Main Rotor Grip — Damage Limits

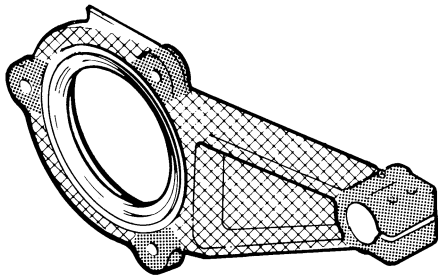

PITCH HORN
206-011-104-9

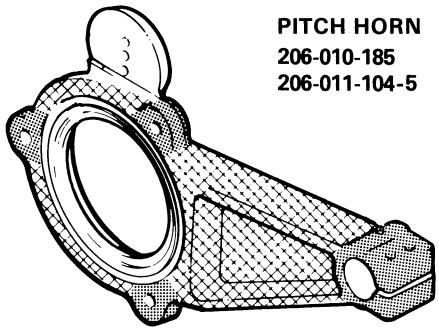

PITCH HORN
206-010-185
206-011-104-5

DAMAGE LOCATION SYMBOLS

TYPE OF DAMAGE	MAXIMUM DAMAGE AND REPAIR DEPTH		
MECHANICAL AND CORROSION	0.010 in. before and after repair	0.030 in. before and after repair	0.040 in. before and after repair
MAXIMUM AREA PER FULL DEPTH REPAIR	0.10 sq. in.	0.25 sq. in.	Not critical
NUMBER OF REPAIRS	1 per lug	2 on arm, 2 others	Not critical
EDGE CHAMFER	0.030 in.	0.060 in.	0.080 in.
BORES	0.002 in. for 1/4 circumference		

206011-40-4D

Figure 2-26. Main Rotor Pitch Horn — Damage Limits

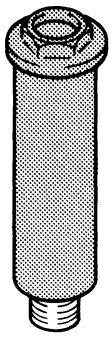

206-010-152
MAIN BLADE BOLT

DAMAGE LOCATION SYMBOLS

TYPE OF DAMAGE	MAXIMUM DAMAGE AND REPAIR DEPTH	
MECHANICAL AND CORROSION	0.002 in. before and after repair	0.010 in. before and after repair
MAXIMUM AREA PER FULL DEPTH REPAIR	0.25 sq. in.	Not critical
NUMBER OF REPAIRS	Two	Not critical
EDGE CHAMFER	Not critical	0.030 in.
THREADS:		
Depth:	1/3 of thread	
Length:	1/4 inch	
Number:	One	

206011-40-5D

Figure 2-27. Main Rotor Blade Bolt — Damage Limits

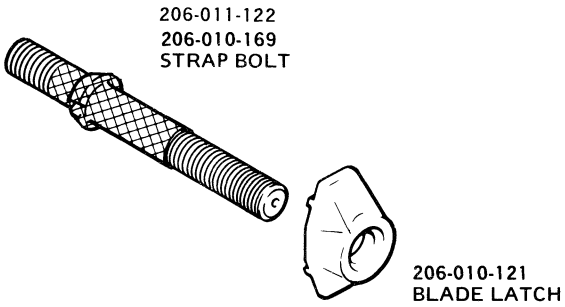

DAMAGE LOCATION SYMBOLS

TYPE OF DAMAGE	MAXIMUM DAMAGE AND REPAIR DEPTH	
MECHANICAL AND CORROSION	0.002 in. before and after repair	0.030 in. before and after repair
MAXIMUM AREA PER FULL DEPTH REPAIR	0.10 sq. in.	Not critical
NUMBER OF REPAIRS	One	Not critical
EDGE CHAMFER	Not critical	0.060 in.
BORE	0.002 inch full circumference	
THREADS:		
Depth:	1/3 of thread	
Length:	1/2 of circumference	
Number:	Two per segment	

206011-40-6H

Figure 2-28. Main Rotor Strap Bolt and Blade Latch — Damage Limits

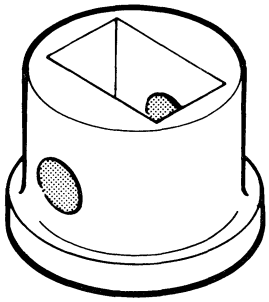

FITTING 206-011-140

DAMAGE LOCATION SYMBOLS

▭

TYPE OF DAMAGE	MAXIMUM DAMAGE AND REPAIR DEPTH
MECHANICAL AND CORROSION	0.002 in. before and after repair
MAXIMUM AREA PER FULL DEPTH REPAIR	0.25 sq. in.
NUMBER OF REPAIRS	One inside and one outside
EDGE CHAMFER	0.020 in.
BORE ◎	0.0005 in. for 1/4 circumference

206010-122

Figure 2-29. Main Rotor Strap Retention Fitting — Damage Limits

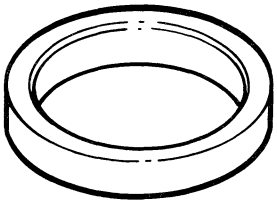

RING 206-010-113

DAMAGE LOCATION SYMBOLS

▭

TYPE OF DAMAGE	MAXIMUM DAMAGE AND REPAIR DEPTH
MECHANICAL AND CORROSION	0.002 in. before and after repair
MAXIMUM AREA PER FULL DEPTH REPAIR	0.05 sq. in.
NUMBER OF REPAIRS	Two
EDGE CHAMFER	0.010 in.

Figure 2-30. Main Rotor Strap Retention Ring — Damage Limits

206010-110C

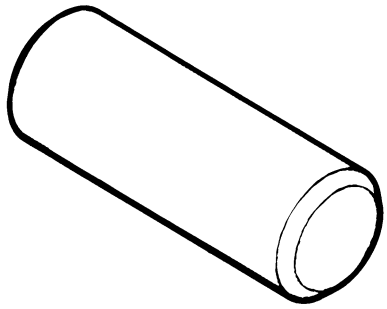

DAMAGE LOCATION SYMBOLS

TYPE OF DAMAGE	MAXIMUM DAMAGE AND REPAIR DEPTH
MECHANICAL DAMAGE	0.0005 in. before and after repair
CORROSION DAMAGE	Scrap pin, none allowed
MAXIMUM AREA PER FULL DEPTH REPAIR	Not critical
NUMBER OF REPAIRS	One
EDGE CHAMFER TO REMOVE DAMAGE	0.010 in.

206010-111A

Figure 2-31. Main Rotor Strap Retention Pin — Damage Limits

l. Check axial play in rod end and barrel of trunnion (28). Axial play not to exceed 0.020 inch. Check general condition of trunnion.

Note

Roller elements in trunnion barrels will normally have a feel of ratcheting and drag during rotation due to preload.

m. Inspect tension/torsion straps (41) for wire strand failures and for abnormalities as follows:

(1) A total of 25 broken wires (50 loose ends) protruding through urethane coating of any one of the 8 outside corners is cause for rejection. A total of 400 loose ends found over the entire strap surface is cause for rejection.

(2) Strap bulge in excess of 0.06 inch outside the normal straight contour is cause for rejection. Bulging of strap cross-section in any area from the ends of the strap to 3.5 inches inboard is normal and not cause for rejection.

(3) Cracks in urethane coating are acceptable providing wires are not visible.

(4) Delamination of urethane coating from the bushing is acceptable. Delamination in any other area is cause for rejection.

(5) A permanent set in twist may occur and is not cause for rejection.

(6) Strap stiffness can vary when flexed in an unloaded condition and is not cause for rejection.

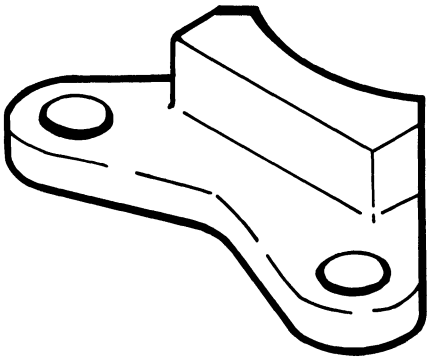

STATIC STOP

DAMAGE LOCATION SYMBOL

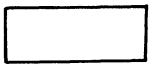

TYPE OF DAMAGE	MAXIMUM DAMAGE AND REPAIR DEPTH
MECHANICAL	0.020 in. before and after repair
CORROSION	0.010 in. before and 0.020 in. after repair
MAXIMUM AREA PER FULL DEPTH REPAIR	0.25 sq. in.
NUMBER OF REPAIRS	Two
EDGE CHAMFER	0.060 in.
BORES	0.002 in. full circumference

Figure 2-32. Main rotor strap stop — damage limits 206011-113C

(7) Oil contamination resulting in swelling of the urethane coating is cause for rejection. If oil has come in contact with strap but swelling has not occurred, strap assembly shall be cleaned with denatured alcohol to remove all traces of oil.

(8) Displacement of urethane around bushings and inner surface of wire bundle is cause for rejection.

(9) Cracks in strap bushings are cause for rejection. Inspect using a ten power glass.

(10) Inspect bushings for fretting corrosion. A maximum of 0.005 inch in depth for 25 percent total area is allowed on bushing flange surfaces. A maximum of 0.002 inch in depth is allowed for one-fourth of total bushing bore surfaces.

n. Inspect flap restraint springs (7, figure 2-16) for correct spring rate. The springs should extend 1.0 inch under a pull of 1.25 pounds plus or minus 0.1 pounds.

o. Inspect yoke (46, figure 2-20) for wear from flap restraint arms. Maximum allowable wear or clean up (typical two places) on yoke shall not exceed the limits shown in figure 2-18 , view A.

2-42A. APPLICATION OF CORROSION PREVENTIVE COMPOUND — MAIN ROTOR HUB.

a. During hub reassembly, apply corrosion preventive compound (item 24, table 1-1) to the following parts as indicated. (See figure 2-35A and 2-35B)

(1) Yoke — Surfaces in contact with strap fittings, radius rings, pillow blocks, and inside diameter.

(2) Strap assemblies — Apply to spool boxes and faces.

(3) Strap fittings — Surface in contact with strap pins, radius rings, and strap assemblies.

(4) Strap pins, radius rings, latch bolts and blade bolts shanks.

(5) Grips — Surfaces in contact with straps, latch bolts and nut and blade bolts.

(6) Pitch horns — Surfaces in contact with pitch change link trunnion assemblies, grips and attachments.

(7) Pillow blocks — Surfaces in contact with yoke.

(8) Trunnion — Splines and ID of splines adjusting screw threads.

(9) Prior to installation of main rotor blades, coat grip tangs and buffer pads.

2-42B. APPLICATION OF SEALING COMPOUND — MAIN ROTOR HUB.

a. During hub reassembly, apply sealing compound (item 115, table 1-1) to the following parts as indicated. (See figures 2-35A and 2-35B)

(1) Thoroughly clean surfaces to receive sealing compound with clean cloths dampened with methyl-ethyl-ketone (item 17, table 1-1). Wipe surfaces dry with a clean cloth before solvent evaporates.

(2) Strap fittings — around flange to seal yoke bore, no edge voids are permitted.

(3) Closures — seal to grip, no edge voids are permitted.

(4) Pitch horns — O.D. of seals, prior to installation.

(5) Outboard seal retainers — seal to grip in accordance with paragraph 2-44 .

(6) Dust shields — position against pitch horns (after grip installation) and seal to yoke with 1/8 to 1/4 inch bead of sealant. Ensure grips are fully extended overboard.

(7) Pillow blocks — O.D. of seals, prior to installation.

(8) Trunnion — fill area (360 degrees) between fillet radii on trunnion and bearing inner races P/N 206-011-111-003. Fair in sealing compound to contour. No edge voids are permitted.

Note

Sealing compound application on trunnion P/N 206-010-136-003 is not required.

(9) Center and preload trunnion and loctite adjusting screws per paragraph 2-44 . Fill cavities for screws with sealing compound (item 38, table 1-1 .)

b. Spray entire hub assembly with WD-40 oil. If hub requires painting, delay coating until paint cures.

c. Reassemble and install main rotor hub and blade per paragraph 2-18 .

2-43. REPAIR OR REPLACEMENT — MAIN ROTOR HUB.

a. Replace all packings, seals, washers, and self-locking type nuts.

b. Replace parts that are cracked, broken, distorted, or have mutilated threads.

c. Replace parts that exceed allowable limits for wear or damage. (See figures 2-24 through 2-35 .)

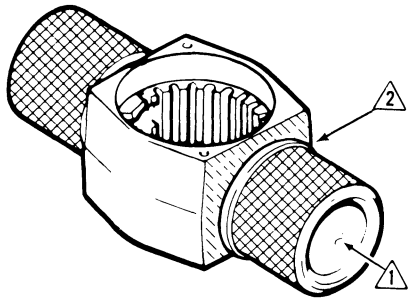

DAMAGE LOCATION SYMBOLS

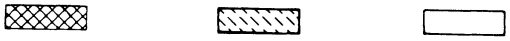

TYPE OF DAMAGE	MAXIMUM DAMAGE AND REPAIR DEPTH		
MECHANICAL DAMAGE & CORROSION	0.002 in. before and after repair	0.010 in. before and after repair	0.020 in. before and after repair 1
MAXIMUM AREA PER FULL DEPTH REPAIR	0.25 sq. in.	0.10 Sq. in.	0.50 sq. in.
NUMBER OF REPAIRS	Two per side diametrically opposed	Not critical None in radius in lower half	Not critical
EDGE CHAMFER	0.040 in.	0.040 in.	0.040 in.
SPLINE:			
DEPTH:	One-third of spline		
LENGTH:	One-half spline		
NUMBER:	Three splines maximum		

Notes:

1 Corrosion cleanup on ID of spindle wall is 0.020 inch with a total maximum repair diameter of 0.040 inch. Ensure that 30° bevel edge is maintained at spindle outboard end and that a 0.160 inch radius is maintained on inboard end of spindle journal.

2 No repairs allowed in radii.

206011-196

Figure 2-33. Main rotor trunnion — damage limits

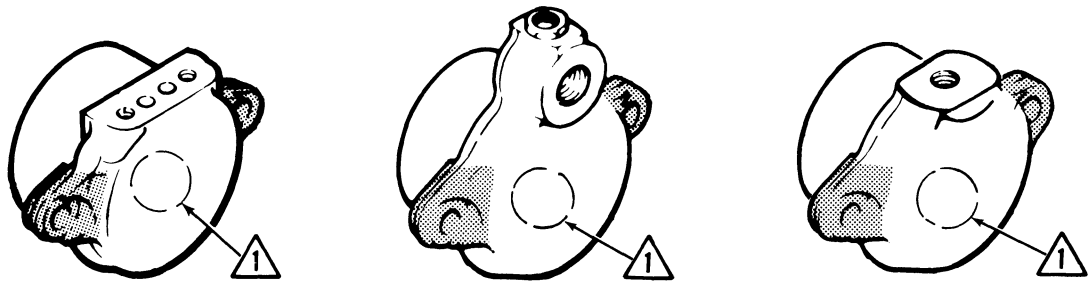

206-010-103
PILLOW BLOCK

206-011-102-7
PILLOW BLOCK

206-011-102-11
PILLOW BLOCK

DAMAGE LOCATION SYMBOLS

TYPE OF DAMAGE	MAXIMUM DAMAGE AND REPAIR DEPTH	
MECHANICAL & CORROSION	0.010 in. before and after repair	0.030 in. before and after repair
MAXIMUM AREA PER FULL DEPTH REPAIR	0.10 sq. in.	0.25 sq. in.
NUMBER OF REPAIRS	One per lug	Two
EDGE CHAMFER	0.030 in.	0.040 in.
BORES	0.002 in. for 1/4 circumference	

NOTE:

1 Depth of surface damage at thrust washer wear zone not to exceed 0.020 inch. Surface must be 32 micro-inches or better and perpendicular to trunnion centerline within 0.002 inch.

Figure 2-34. Main Rotor Trunnion Pillow Block – Damage Limits 206011-40-7F

d. Replace oil level sight glass (23, figure 2-20) or sight plug (58) if cracked, crazed, or discolored.

e. Replace shield (42) if damaged.

f. Replace bearing (55) and inner race (54), if damaged, wear limits are exceeded, or bearings are not smooth in operation.

g. Replace teflon pads (63) on pillow blocks (62) if pad is worn through or severe fretting has occurred. Replace teflon pad as follows:

(1) Remove pads and abrade pillow block lightly with No. 400 grit abrasive cloth or paper (item 13 or 15). Remove sanding residue with MEK (item 17), and wipe dry.

(2) Apply adhesive (item 121) to faying surface of pillow block and pad. Position pad on pillow block, using care to ensure alignment.

(3) Remove excess adhesive squeeze-out with a cloth moistened with MEK (item 17). Apply firm pressure to pad and cure adhesive for 24 hours at 70° to 90°F (21° to 35°C) or alternate cure for 30 minutes at 145° to 155° (63° to 68°C).

h. The bearing surfaces of blade bolts (7, figure 2-20) and the portion of the 206-010-169-1 strap bolts (3) which bears on the straps (41) and grips (14) are coated with a solid film lubricant.

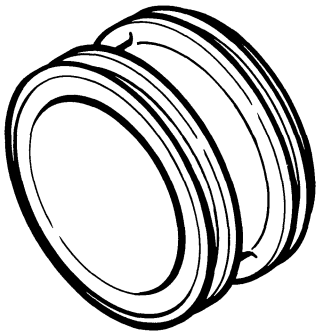

206-010-107 RETAINER
206-011-130 RETAINER

DAMAGE LOCATION SYMBOL

TYPE OF DAMAGE	MAXIMUM DAMAGE AND REPAIR DEPTH
MECHANICAL AND CORROSION	Surface damage to retainer does not require repair, provided the function of seals are not disturbed and burrs or similar damage will not deteriorate during service.

206011-121A

Figure 2-34A. Main Rotor Hub Retainer — Damage Limits

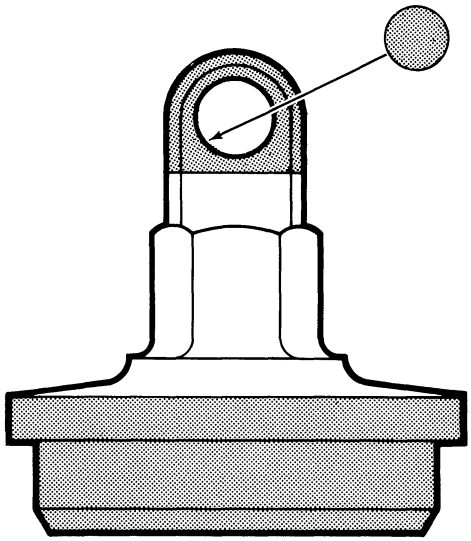

206-010-198 MAST NUT
206-011-007 MAST NUT

DAMAGE LOCATION SYMBOLS

TYPE OF DAMAGE	MAXIMUM DAMAGE AND REPAIR DEPTH	
MECHANICAL AND CORROSION	0.010 in. before and after repair	0.030 in. before and after repair
MAXIMUM AREA PER FULL DEPTH REPAIR	0.10 sq. in.	Not critical
NUMBER OF REPAIRS	Not critical	Not critical
EDGE CHAMFER	0.030 in.	0.060 in.
THREAD:		
Length:	0.50 in.	
Depth:	1/3 of thread	
Numbe :	Two	

206011-117B

Figure 2-34B. Mast Nut — Damage Limits

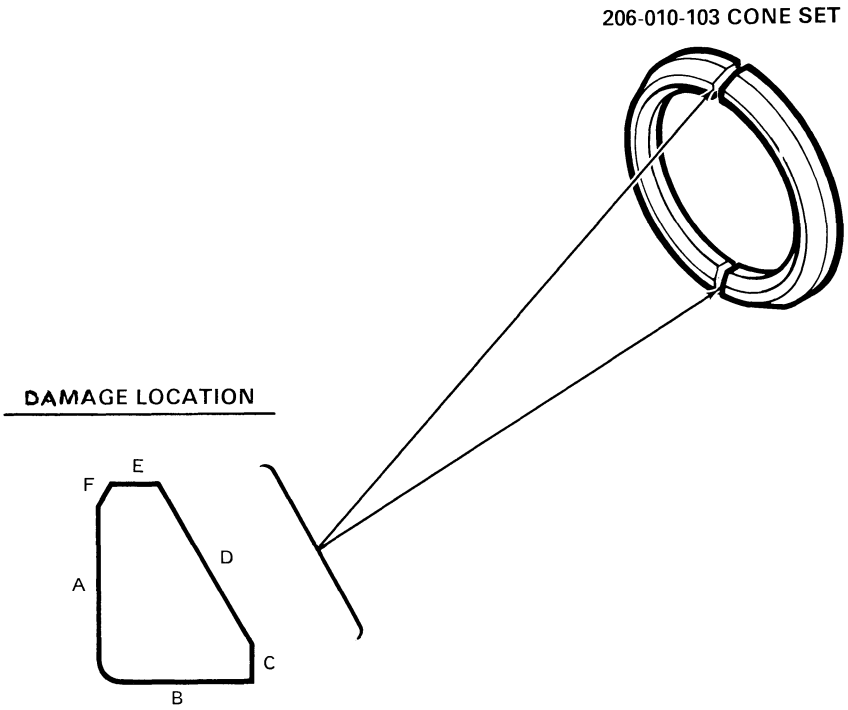

SURFACES	MAXIMUM DAMAGE AND REPAIR DEPTH
A, C, E, and F	Damage may be considered negligible and not requiring repair if the depth does not exceed 0.010 inch, and the minimum radii observed in the damage area are not less than 0.025 inch.
B	Damage not exceeding depth of 0.005 inch may be repaired with the use of a surface plate. Both halves of the cone set must be surfaced exactly the same amount so that the distance from surface B to D is identical for both halves.
D	Surface must not have any protrusions above the surrounding surface. Dents and scratches not exceeding depth of 0.010 inch may be polished out.
Edge Chamfer to Remove Damage	0.030 inch.

206010-115-1A

Figure 2-34C. Main Rotor Cone Set — Damage Limits

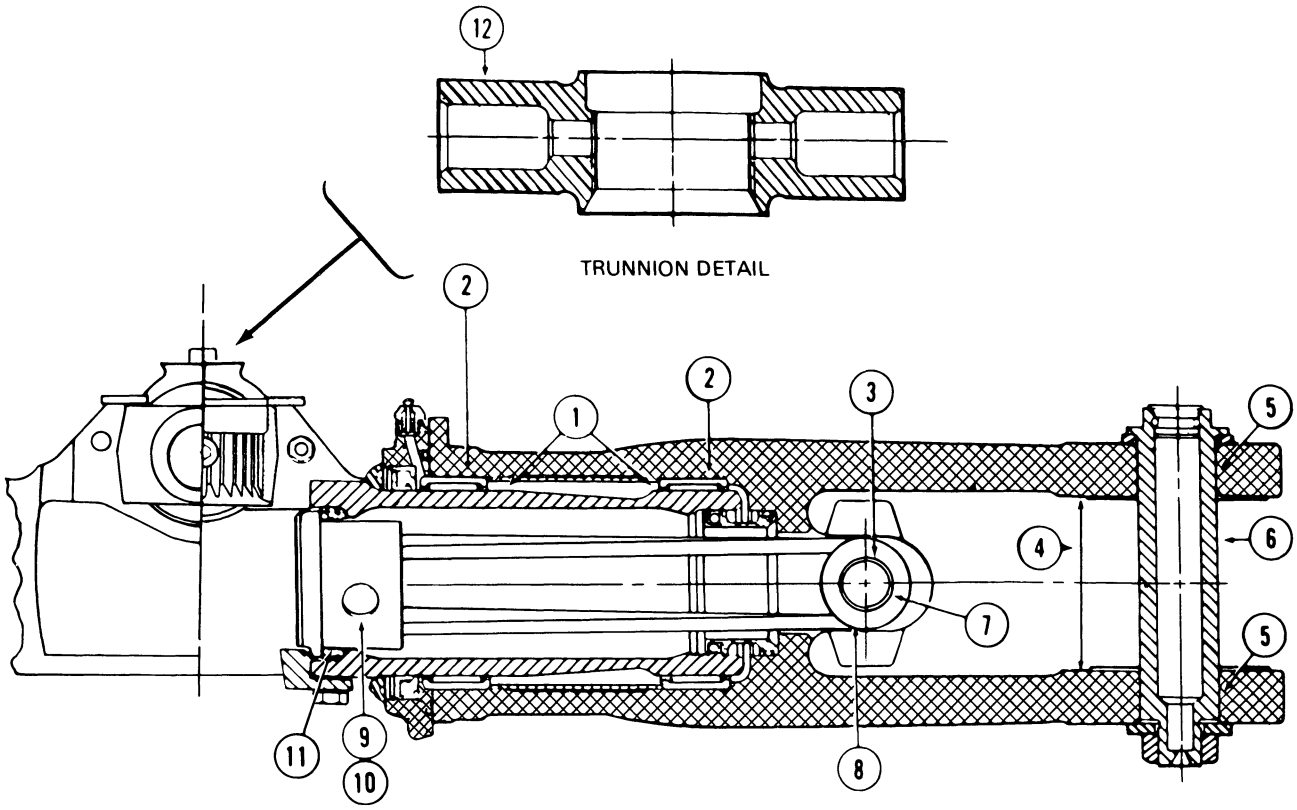

ITEM	NOMENCLATURE		MIN	MAX.
			INCHES	
1	Main Rotor Yoke (Diameter of four main rotor grip bearing journals)	OD	3.4970	3.5005
2	Main Rotor Grip	ID	3.9995	4.0050
3	Main Rotor Grip (Strap retaining bolt holes)	ID	0.8750	0.8770
4	Main Rotor Grip (Dimension between tangs)	ID	3.3560	3.3600
5	Main Rotor Grip (Blade bolt holes)	ID	1.5200	1.5230
6	Blade Bolt	OD	1.5170	1.5199
7	Strap Retaining Bolt	OD	0.8730	0.8745
8	Strap (Large hole)*	ID	0.8750	0.8770
9	Strap (Small hole)*	ID	0.7500	0.7520
10	Strap Retaining Pin	OD	0.7485	0.7495
11	Retention Strap Fitting Pin Hole	ID	0.7500	0.7505
12	Trunnion	OD	1.5004	1.5013

NOTE: Measurement must be taken in line with both spindles.
*Maximum allowable axial scoring is 0.002 inch deep. No circumferential scoring is allowed.

206011-195

Figure 2-35. Main Rotor Hub Limits Chart (Typical)

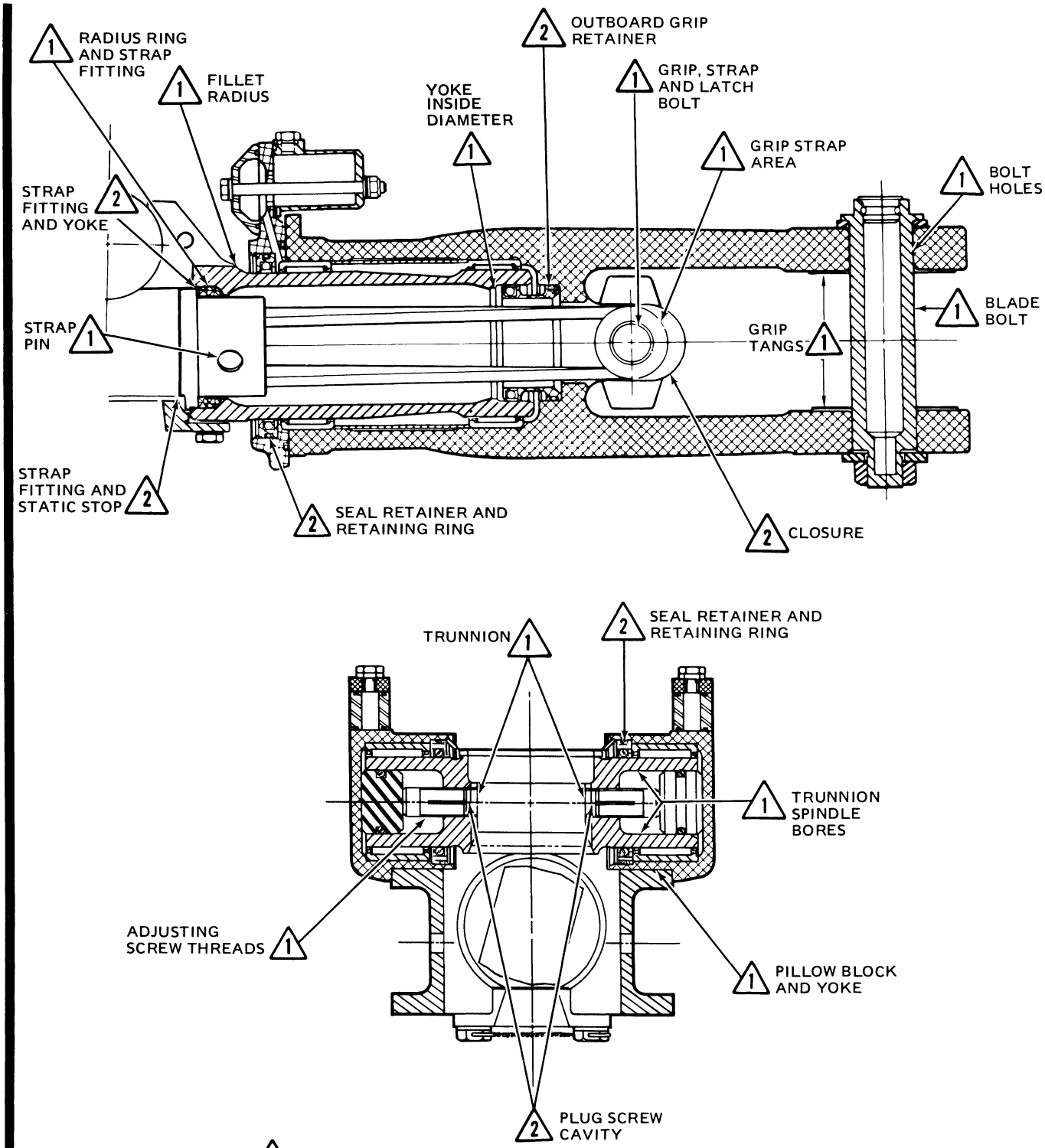

Figure 2-35A. Main rotor hub assembly P/N 206-010-100-003, -005 and -007 — application of corrosion preventive and sealing compound

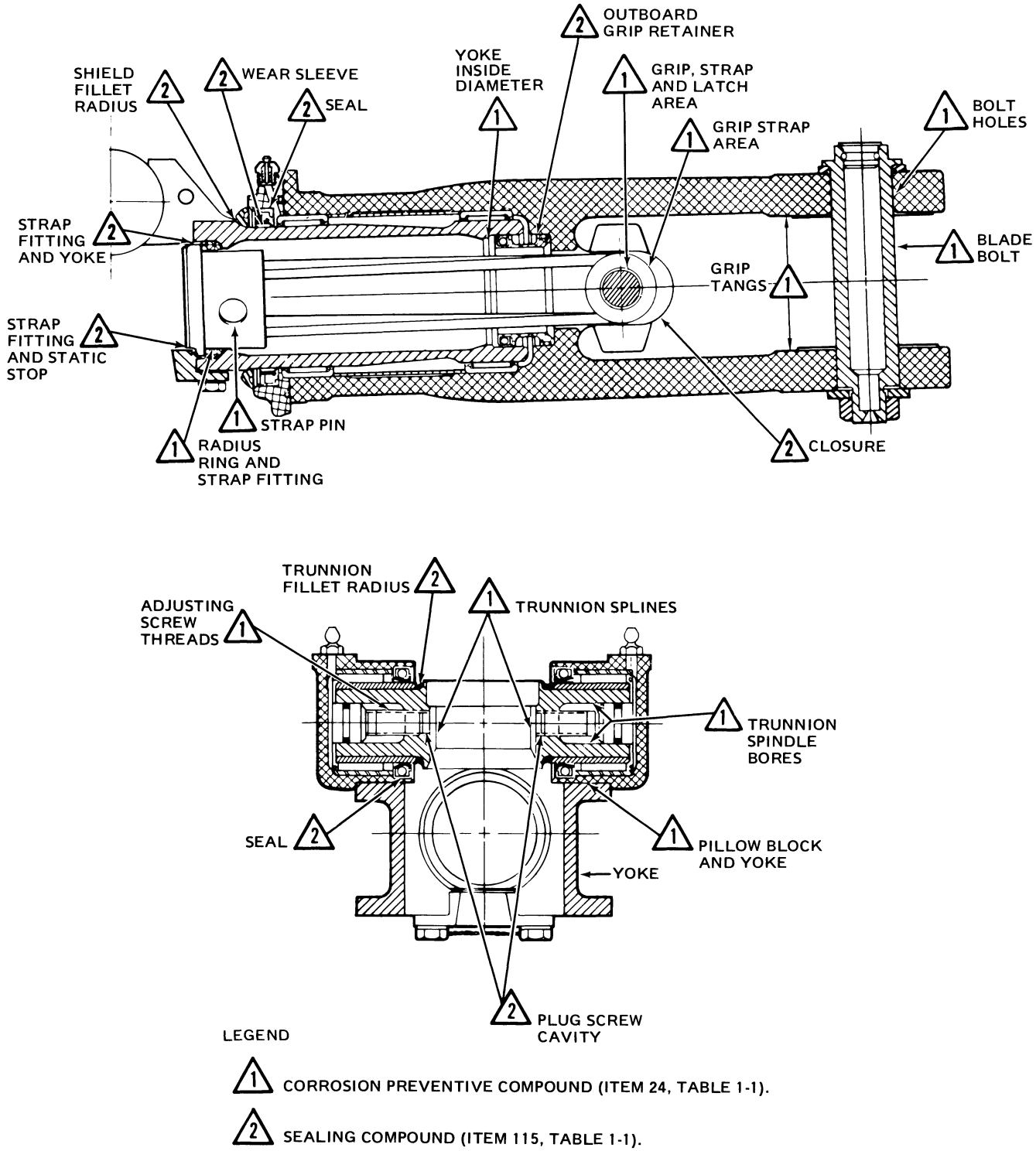

Figure 2-35B. Main rotor hub assembly P/N 206-010-100-009 and 206-011-100 series — application of corrosion preventive and sealing compound

Note

Bearing surfaces of 206-010-169-3 or 206-011-122-3 strap bolts are cadmium plated and the following procedure is not applicable.

(1) Touch-up of very small areas of the solid film lubricant is authorized. Clean area of touch-up with clean cloth and naphtha (item 36). Wipe dry with clean cloth before naphtha evaporates. Apply solid film lubricant (item 16) with a brush.

(2) Strip bolts of solid film lubricant by scrubbing with MEK (item 17) if more than a very small area of the film is damaged. (Refer to Section I.)

i. If there is damage or 0.002 inch wear to sleeve (43, figure 2-20) where lip of seal contacts, replace sleeve. Install wear sleeve (43) on each spindle of yoke (46) as follows:

(1) Fabricate a wear sleeve work aid in accordance with figure 1-13.

(2) Clean yoke spindles and ID of wear sleeve with MEK (item 17) and wipe dry.

(3) Apply sealant (item 7) to yoke spindle bearing surfaces, to work aid ID and wear sleeve ID to facilitate wear sleeve installation. Apply a bead of sealant (item 7) around radius at inboard end of yoke spindle.

(4) Preheat wear sleeve (43, figure 2-20) with a heat lamp. Position the ID chamfered end of wear sleeve inboard and hand fit wear sleeve over end of yoke spindle. Ensure that wear sleeve is square to yoke spindle.

(5) Support the yoke on a press and position the wear sleeve work aid over wear sleeve and yoke spindle. Press wear sleeve onto yoke spindle until work aid bottoms out. Check wear sleeve for proper location. (See figure 2-36) Clean wear sleeve and flush inboard end with naphtha (item 36). Ensure all cured sealant is removed. Apply a bead of sealant (item 7) around inboard end of wear sleeve. Fair out sealant to form a fillet in yoke radius. No edge voids permitted.

(6) Repeat steps (2) through (5) above, on opposite side of yoke.

j. Replace bearings (37 and 55, figure 2-20) if damaged or if bearings do not operate smoothly.

Note

Hand pack bearings (37 and 55) with grease (item 82) prior to installation in grips (14 or 72) and pillow block (77). Coat yoke (46) and trunnion (49) spindles with grease.

k. Replace straps (41), pins (64), grips (14), and strap fittings (66), in accordance with MANDATORY RETIREMENT SCHEDULE. (Refer to Section I.)

l. Repair acceptable corrosion and mechanical damage. (See figure 2-24 through 2-34D for limits.)

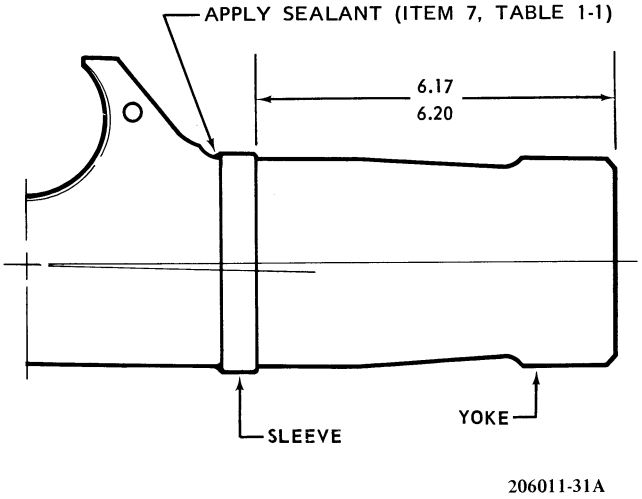

Figure 2-36. Main rotor yoke — wear sleeve installation

(1) Use fine to medium grit abrasive paper (item 15) and final polish to a scratch free surface with abrasive cloth (item 13). Polish out score marks in holes and bores if damage and subsequent repair does not exceed 0.002 inch depth.

(2) Touch up brush cadmium (item 58) on previously plated repaired surfaces to repairs on steel parts and apply alodine (item 6 or 32) to repairs on aluminum parts. (Refer to Section I.)

m. Install buffer pads (40, figure 2-20), closures (39), on grips (14), and shields (42) on yoke (46) as follows:

(1) Surfaces to be bonded must be clean, dry, and free from oil or grease. Abrade faying surfaces lightly with abrasive paper or cloth (item 90) and clean with naphtha (item 36) or MEK (item 17).

(2) Bond with adhesive (item 121). Apply adhesive to faying surfaces extending approximately one-fourth inch past edge diameter of buffer pads. After bond, fair and seal edges of buffer as shown on figure 2-20 detail E.

(3) After cure, clean surfaces with naphtha (item 36) and dry. Light sanding with abrasive paper or cloth (item 90) is permissible.

(4) Apply a mist coat of primer (item 56). Paint with two coats of light gull gray acrylic lacquer (item 5). Omit finish in areas indicated in figure 2-20 detail E.

2-44. REASSEMBLY — MAIN ROTOR HUB.

CAUTION

Do NOT allow main rotor grips or yoke to rotate on pitch change axis. If grip or yoke is allowed to rotate on the pitch change axis beyond 90 degrees, the main rotor grip retention strap/s must be replaced. Secure main rotor blade grip through the pitch horns to yoke with lockwire or suitable work aid.

a. Reassemble and install 206-011-113 trunnion assembly as follows:

(1) Clean trunnion (49, figure 2-20 , detail D) and inner race (54) with cleaning solvent (item 12).

(2) On oil hubs apply lubricating oil (item 54) to ID and OD of inner race (54, figure 2-20) and to OD of spindles on trunnion (49). On grease hubs hand pack bearings and coat inner races with grease (item 82).

WARNING

Wear asbestos gloves when handling heated parts. Inner race is thermal fitted to trunnion; do not attempt to install inner race without heating.

(3) Heat inner race (54) to a temperature not to exceed 275°F (135°C). Remove inner race from heating media and immediately press onto spindle of trunnion (49) until outboard ends of inner race are flush with end of spindle. If an inner race is allowed to cool before pressing operations are completed damage to trunnion or inner race may occur. Fabricated pressing plate may be used to aid in pressing inner race on spindle of trunnion. (See figure 1-13 for fabrication of 206-011-111 trunnion bearing inner race pressing plate.)

(4) Clean trunnion (49) and inner race (54) with MEK (item 17) and wipe dry with a clean cloth. Apply a bead of sealant (item 7) around inboard end of inner race and trunnion, filling radius groove. No edge voids permitted.

(5) Clean screws (50, figure 2-20 , detail D) and mating threads in trunnion (40) with methyl-ethyl-ketone (item 17). Install screws in journal end of trunnion.

(6) Oil lubricated hubs.

(a) Coat new packing (52, figure 2-20) with lubricant (item 26) and install on thrust washer (51, figure 2-20).

(b) Install thrust washers in journal end of trunnion and position trunnion in yoke (46).

(7) Grease lubricated hubs.

(a) Apply a coating of lubricant (item 82) to new packings (52, figure 2-20) surfaces of thrust washers (51) and to inside diameter of journals in trunnion (49).

(b) Install thrust washers into journals of yoke (46).

WARNING

Wear asbestos gloves when handling heated parts. Do not exceed 200°F (93°C).

(8) Apply heat lamp to pillow blocks (62 or 77) and press bearing (55) in pillow blocks. Apply figure film of sealant (item 7) to OD of new seal (53, figure 2-20) and ID of pillow block and install as follows:

(a) Install seal (53) part number 410351 with lip of seal pointing inboard for oil lubricated main rotor hub.

(b) Install seal (53) part number 450351 with lip of seal pointing outboard (back-up spring exposed) for grease lubricated main rotor hub without modification to permit grease lubrication.

(c) Apply a light coat of lubricant (item 26) to lip of seal and install seal in pillow block.

(9) Install trunnion (49) in yoke (46) and install pillow blocks (62 and 77) on each end of trunnion. Exercise care to avoid damaging seals (53) during installation over inner bearing races (54). Install bushings (61A), washers (45A or 61), bolts (60 or 60A) and nuts (44). Torque nuts (44) to 60 inch-pounds when using NAS1304-13 or 20-057-4-13 bolts (60). Torque EB048 nut to 150 inch-pounds when using MS21250-04018 bolts (60A).

(10) Paint slippage index marks on bolts (60) and nuts (44).

(11) Coat new packings (57 and 59) with lubricant (item 26) and install on plugs (56, figure 2-20) and sight plugs (58). Install plugs in pillow blocks (62).

b. Center trunnion (49) on pitch change axis within 0.003 inch as follows:

(1) Position yoke (46) on a surface plate with bearing journals supported by vee blocks. (See figure 2-37) Insert trunnion centering dowel work aid into trunnion, dowel must be a line-to-line fit in trunnion with no more than 0.001 inch clearance. If dowel is a loose fit it is either undersize or splines of trunnion are worn. (See figure 1-13 for fabrication of main rotor trunnion centering dowel.)

(2) Level yoke and trunnion centering dowel. With the use of vernier height gage measure and record the distance between the top surface of the trunnion centering dowel and top surface of yoke inboard bearing journal, dimension A. Measure and record the distance between the lower surface of the trunnion centering dowel and lower surface of yoke inboard bearing journal, dimension B. (See figure 2-37) Dimensions A and B must be equal within 0.003 inch.

(3) Reposition trunnion, as necessary with adjusting screws to obtain equal readings at dimensions A and B within 0.003 inch. (See figure 2-37) Recheck trunnion centering after each adjustment

(4) Remove trunnion centering dowel work aid. Torque screws (6, figure 2-18) 115 to 130 inch-pounds. Reinstall trunnion centering dowel work aid and recheck trunnion centering after each adjustment in accordance with steps (1) through (3).

(5) After trunnion (49) is adjusted, apply primer, grade T (item 85) and sealant (item 38) to inboard ends of screws (50, figure 2-20) and to threaded area of trunnion journal as follows:

CAUTION

Do not move screws (50).

(a) Clean heads of screws (50) and threads in journal of trunnion (49) by wiping surfaces with a cloth moistened with safety solvent (item 84).

(b) Apply a wet film of primer, grade T (item 85) with the use of a cotton swab to heads of screws (50, figure 2-20) and threads in journal of trunnion (49). Allow 2 to 3-minute flash off of the primer prior to sealant application.

(c) Apply a small amount of sealant (item 38) to heads of screws (50, figure 2-20) and thread area. The sealant will be drawn into thread area by capillary action sealing screws in place. Complete sealing of screws is assured when a purple ring of sealant remains around screw heads. Allow sealant to cure at room temperature 70° to 80°F (21° to 27°C) for 60 to 90 minutes. Seal heads of screws with a plug of sealant (item 7).

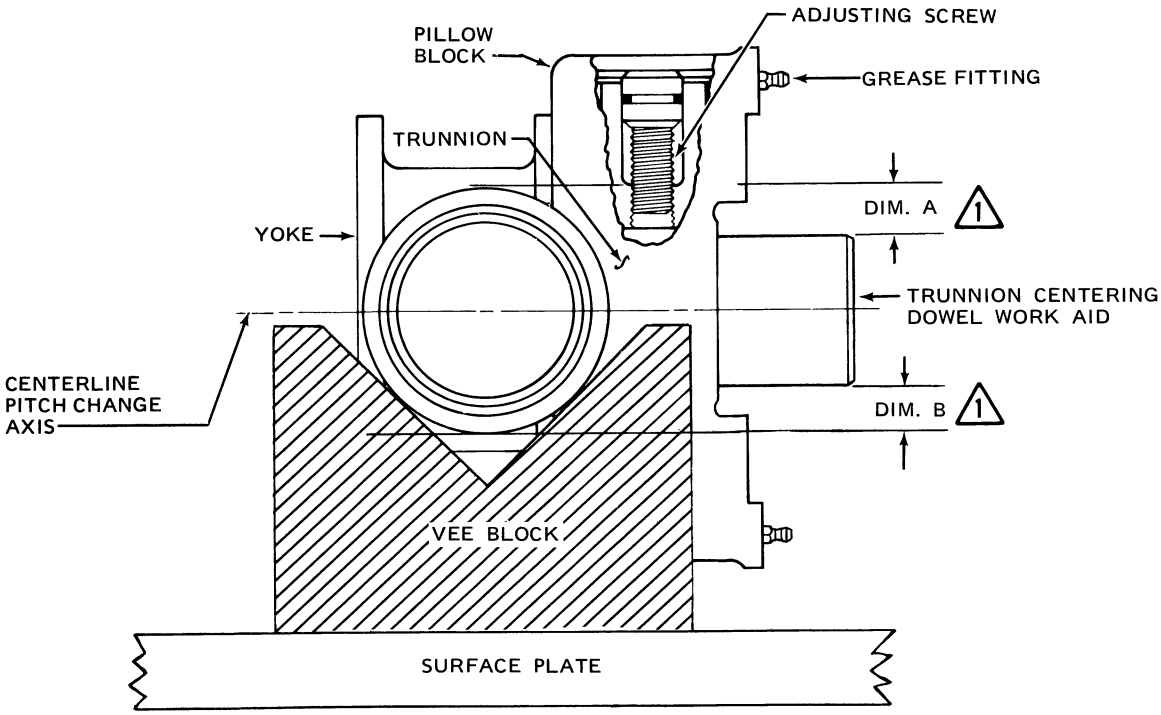

Notes:
1. Dimensions A and B must equal within 0.003 inch with yoke and trunnion centering dowel level.

L206011-63A

Figure 2-37. Centering trunnion without grips installed

Figure 2-38 deleted

c. Position yoke (46) on work bench or stand and assemble pitch horns (30 or 76) and grips (14 or 72) as follows:

CAUTION

Do NOT allow main rotor grips or yoke to rotate on pitch change axis. If grip or yoke is allowed to rotate on the pitch change axis beyond 90 degrees, the main rotor grip retention strap/s must be replaced. Secure main rotor blade grip through the pitch horns to yoke with lockwire or suitable work aid.

(1) Thoroughly clean the following parts with naphtha (item 36) and dry thoroughly. Faying surfaces of yoke (46, figure 2-20), pins (64), rings (65), and strap fittings (66), and inside diameters of holes in each end of straps (41).

(2) Apply corrosion preventive compound (item 24) to faying surfaces of yoke (46, figure 2-20), pins (64), rings (65), inside diameters of pin holes in strap fittings (66) and outside diameter. Do not allow corrosion preventive to contact inboard flanged surface of fittings in area to be sealed. (See figure 2-7 , Note 3.) Also apply corrosion preventive compound to pin and bolt holes in straps (41, figure 2-20 and inside diameter of yoke. (See figure 2-35B).

CAUTION

Do not inter-mix 206-010-123-1 or -3 pins (64). Do not inter-mix 206-010-155-7, -11, and -15 strap fittings (66). For replacement use two 206-011-140-1 strap fittings (66) and two 206-010-123-3 pins (64).

(3) Position straps (41) in journal ends of yoke (46) with small hole in strap inboard. Install rings (65) on strap fittings (66) and install pins (64) through fittings and straps. Pull straps (41) outboard in yoke (46) to seat strap fittings (66).

(4) Apply a bead of sealant (item 7) around exposed inboard flanged end of strap fittings (66, figure 2-20 and mating surface of yoke (46). (See figure 2-7 , Note 3.) Fully seat strap fittings (66, figure 2-20 in yoke (46) by pulling outboard on straps (1). Check to ensure that clearance between strap fittings and yoke is filled with sealant and that strap fitting is aligned for installation of static stop (70).

(5) Install static stop (70), rubber stop (67), and shims (71). Use shims (71) as required to obtain 0.000 to 0.004 inch pinch fit between static stop (70) and strap fitting (66). Install bolts (68), washers (69), and torque to 175 inch-pounds. Do not safety wire bolts at this time for static stop must be adjusted after installation of main rotor hub on helicopter.

(6) Install retainers (34), packings (33 and 36), and excluder (35) as follows:

(a) Clean grooves in retainer (34) and mating surface area in bore of grips (14) with naphtha (item 36).

(b) Fabricate main rotor hub excluder mandrel and packing spoon work aids. (See figure 1-13, for fabricating work aid.)

(c) Insert small end of excluder work aid mandrel into inboard end of retainer (34, figure 2-20). Position new excluder (35) on mandrel with lip pointing outboard. Slide excluder onto retainer into groove. (See figure 2-8 .)

(d) Use fabricated packing spoon to slide packing (36, figure 2-20) under lip of excluder.

(e) Apply a coating of sealant (item 7) to outboard groove in retainer (34, figure 2-20) and install new packing (33) in groove. Recoat packing with sealant. Apply a film of sealant to mating surfaces in end of bore inside grips (14). (See figure 2-7, detail C.)

(f) Install retainer (34) in grip (14) with packing (33) end first until fully seated in end of grip bore.

WARNING

Wear asbestos gloves when handling heated parts. Do not exceed 200°F (93°C).

(g) Cure sealant for 72 hours at 70° to 80°F (21° to 27°C). Alternate cure is 1 hour at 70° to 80°F (21° to 27°C) plus 2 hours at 175°F (79°C).

(7) On oil lube hub apply lubricating oil (item 54) to ID and OD of bearings (37, figure 2-20), spacers (38), and bore of grips (14). On grease lube hub, hand pack bearings and coat yoke spindles with grease (item 82).

(8) Apply heat lamp to bearing area in grip (14) and install bearings (37) and spacers (38).

(9) Assemble pitch horns (30 or 76) and install on yoke spindle (46).

(a) Fabricate main rotor hub trunnion work aid. (See figure 1-13, for manufacture instructions.)

(b) Using pitch horn trunnion work aid, install trunnion (28) in pitch horn (30 or 76) and align slots on trunnion barrel with bolt holes in pitch horn. Install bolts (26), washers (27), and nuts (29). Torque nuts (29) to 60 inch-pounds plus friction drag of nuts.

(c) Oil lubricated hubs.

1 Apply a thin film of sealant (item 7) to outside diameter of seal (25, figure 2-20 and mating inside diameter of pitch horn (30). Press seal (25) into outboard face of pitch horn (30) with metal seal case inboard.

2 Lubricate lips of seals (25), packings (31) and excluder (35) with lubricant (item 26). Also apply lubricant to yoke (46, figure 2-20) at inside diameter of journal that will mate with excluder (35).

3 Insert packings (31) in groove on outboard face of pitch horn (30). Position pitch horn (30 or 76) to grip (14) with arm for trunnion (28) to leading edge side of grip and flange for reservoir (19) up. Install bolts (9), washers (10), and nuts (11) with bolt heads inboard to secure pitch horns to grips. Torque nuts (11) to 120 inch-pounds.

(d) Oil lubricated hubs modified by Technical Bulletin 206-76-6 or 206-78-5 to use grease.

1 Install washer (83), or vent plate (83A), washer (82), bolt (81), and nut (80).

2 Remove first lip of seal (25).

3 Apply a thin film of sealant (item 7) to outside diameter of seal (25, figure 2-20) and mating inside diameter of pitch horn (30). Press seal (25) into outboard face of pitch horn (30) with metal seal case outboard.

d. Carefully rotate grips (14 or 72) and pitch horns (30 or 76) on spindle of yoke (46). Continue rotating grips onto spindle engaging outboard end of straps (41) into square hole inside grips until bolt holes for strap bolt (3) are aligned.

Note

Prior to assembly of grips (72) onto yoke, coat yoke spindles liberally with MIL-G-81322 grease (item 21).

(1) Thoroughly clean inside diameter of strap bolt holes in lugs on grips (14) with naphtha (item 36). Dry thoroughly. Apply Grade I corrosion preventive compound (item 24) to inside diameter of strap bolt holes. Install strap bolts (3, figure 2-20) from trailing edge side into lugs on grips (14) engaging straps (41) and aligning notch in shoulder of strap bolts. Use naphtha (item 36) to remove corrosion preventive compound from threads. Install washers (13, figure 2-20) and nuts (12) on leading edge side of strap bolts (3) and torque nuts to 180 foot-pounds, using (T101554) socket wrench.

(2) Install springs (6), latches (5), and nuts (4) on strap bolts (3). Do not torque nuts (4) at this time, this will be accomplished during main rotor blade installation and alignment.

e. Install grip reservoirs (19, figure 2-20) to each pitch horn (30) as follows:

(1) Coat packings (18, 21, and 22) with lubricant (item 26).

(2) Insert washer (17, figure 2-20), packing (18), and sight glass (23) on bolt (24). Ensure chamfered side of washer (17) is next to packing (18). Insert packing (22) into groove in sight glass (23) and install to inboard flange side on pitch horn (30).

(3) Insert packing (21) in groove in reservoir (19) and install on outboard flange side of pitch horn (30) and bolt (24) with a packing (18), washer (17), lockwasher (16), and nut (15). Ensure chamfered side of washer (17) is next to packing

(18). Torque nut (15) until lockwasher (17) is completely compressed, then back off nut one full turn or 6 plus or minus one-half wrench flats. Loosely install fitting (20) in reservoir (19).

CAUTION

Do not inter-mix blade bolts (7), washers (2 and 8), and nuts (1). When installing 206-010-152-1 blade bolts, use 206-010-153-1 chamfered washers under bolt heads, and 206-010-154-3 washer under the 206-011-119-1 nuts. When installing 206-010-152-3 blade bolts, use 206-010-153-1 chamfered washers under bolt heads, and 206-010-154-3 washers under the 206-011-119-1 nuts.

f. Install blade bolts (7) with washers (2 and 8) and nuts (1). Do not torque nuts unless main rotor blades are installed.

g. Install spacer washer (48, figure 2-20) with screws (47) to trunnion (49) if flap restraint is not installed. (Refer to paragraph 2-26 , for installation of flap restraint.)

h. Paint main rotor hub in accordance with paragraph 2-45 and table 2-5 .

i. Lubricate main rotor hub in accordance with paragraph 2-46 .

2-45. PAINTING — MAIN ROTOR HUB.

a. Touchup all exposed steel surfaces with brush cadmium (item 58) and aluminum surfaces with chemical film treatment (item 32 or 6). (Refer to Section I)

b. Mask areas which do not require painting with masking tape (item 75).

c. Paint components of the main rotor in accordance with table 2-5.

Table 2-5. Painting Requirements Main Rotor Hub

ITEM NAME	PAINT TYPE AND SPECIFICATION	METHOD OF APPLICATION	NO. OF COATS	NOTES
Yoke	Primer, (Item 56)	Spray	1	Paint yoke center section inboard of spindle wear sleeves. Omit finish on spindles, threaded holes, data plates, and radius ring bore inboard end of spindle. Swab spindle ID, omit primer on retainer and seal bore.
	P-95 Light Gull Gray Acrylic Lacquer, Color No. 36440 (Item 5)	Spray	2	
Pitch Horn and Pillow Block	Primer, Polyamide Epoxy (Item 56)	Spray	1	Omit finish on horn trunnion bore, bolt holes, data plates, reservoir and sight glass contact areas, seal bore, yoke spindle bore, and oil supply hole.
	P-95 Light Gull Gray Acrylic Lacquer, Color No. 36440 (Item 5)	Spray	2	
Grip	Primer, Polyamide Epoxy (Item 56)	Spray	1	Omit finish on grip to pitch horn mating surface, wear pads of grip tang that mate with blade, blade bolt holes, bearing bore, inboard faces of tangs that mate with retention strap, and strap bolt holes.
	P-95 Light Gull Gray Acrylic Lacquer, Color No. 36440 (Item 5)	Spray	2	

2-46. LUBRICATION — MAIN ROTOR HUB.

a. Oil lubricated.

(1) Fill bearing cavities at fitting (20, figure 2-20) and filler plug (56), with lubricating oil (item 50). Work out all air bubbles and fill until sight glass and sight plug are one-half full. Verify actual presence of oil in sight glass. Install fitting (20) and plug (56). Check 206-011-100-17 hub for oil leaks.

(2) Safety filler plug (56) to sight plug (58) with 0.032 inch lockwire (item 19) (206-011-100-17 main rotor hub).

(3) Remove screw (74) and thin steel washer (75) from pitch horn (76) (206-011-100-21 main rotor hub).

b. Grease lubricated.

(1) Lubricate grip (72) with grease (item 82) through lubrication fitting (73) until grease flows out vent in pitch horn (76) (206-011-100-21 main rotor hub).

(2) Purge lubricate trunnion (28, figure 2-20) with grease (item 82).

Note

Inject grease slowly so as not to displace end cap or seal.

Part 2A
Overhaul - Main Rotor Hub Assembly (P/N 206-011-100-127, -137, and -145) (Grease Lubricated)

Note

For Main Rotor Hub Assembly (206-010-100) refer to Overhaul, Part 1. For Main Rotor Hub Assembly (206-011-100-021 and prior) refer to Overhaul, Part 2.

Note

Screen records and retire those components which have accumulated maximum operating time or will accumulate maximum operating time before next scheduled overhaul. (Refer to Section I, MANDATORY RETIREMENT SCHEDULE.)

Note

Limits Charts, listing critical dimensions of parts, are provided as a convenience in determining closeness of fit between mating parts. They also provide replacement dimensions of worn parts. It is not intended that all dimensions listed on Limits Charts are to be checked out as a prescribed overhaul procedure. Parts that give evidence of wear or physical damage will be checked dimensionally.

Note

For consumable materials item numbers, refer to Section I, CONSUMABLE MATERIALS, Table 1-1 .

2-46A. MAIN ROTOR HUB ASSEMBLY (206-011-100-127, -137, and -145) — OVERHAUL.

CAUTION

Do NOT allow main rotor grips or yoke to rotate on pitch change axis. If grip or yoke is allowed to rotate on the pitch change axis beyond 90 degrees, the main rotor grip retention strap/s must be replaced. Secure main rotor blade grip through the pitch horns to yoke with lockwire or suitable work aid.

The special tools required for overhaul of the main rotor hub assembly are contained in table 2-5A .

Table 2-5A. Special Tools for Main Rotor Hub — Overhaul

PART/FIXTURE NUMBER	NOMENCLATURE
T101491	Bearing Puller
T101554	Socket Wrench
Figure 2-38F	Grip Retainer Dowel
Figure 2-38G	Pitch Horn Trunnion

Table 2-5A. Special Tools for Main Rotor Hub — Overhaul (Cont)

PART/FIXTURE NUMBER	NOMENCLATURE
Figure 2-38B or 952 (Owatonna)	Trunnion Bearing Pressing Plate
Figure 2-38D	Trunnion Bearing Pulling Attachment
Figure 2-38C	Trunnion Bearing Pressing Plug
Figure 2-38AM	Trunnion Centering Dowel
Figure 2-38AJ	Main Rotor Hub Excluder Mandrel
Figure 2-38AB	Wear Sleeve Installation

2-46B. DISASSEMBLY — MAIN ROTOR HUB. (206-011-100-127, -137, and -145)

Note

Review Airworthiness Limitations Schedule in Section I and retire items scheduled for retirement.

If main rotor hub is being disassembled for replacement of a defective part instead of overhaul, disassemble only to extent necessary to replace defective part(s).

a. If the records and/or physical appearance of the main rotor hub indicate the component has been subjected to an accident or incident such as overspeed, overtorque, or sudden stoppage, accomplish step a., paragraph 2-46E , prior to disassembly.

b. Place main rotor hub assembly on work bench and support yoke (12, figure 2-38A) and grips (46) with three pieces of wood, approximately 2x4x10 inches. Place wood pieces under grip and yoke.

c. Remove nuts (5) and washers (6) from outboard side of yoke (12). Remove bolts (31), countersunk washers (31A), and bushings (30) from each pillow block (28). Using a soft faced plastic mallet, tap pillow blocks from yoke and trunnion (20).

d. Remove trunnion (20) from yoke (12). Using a 1/4 inch hexagon wrench, turn adjusting screws (21) clockwise to drive thrust washers (22) from journal ends of trunnion (20). Continue turning adjusting screws until they clear threads in trunnion. Discard packings (23) from thrust washers.

e. Remove nut (72), hub balance washers (69, 70 and 71), retainer (68), washer (67), and nut (66) from yoke (12). (Refer to Detail A, figure 2-38A).

f. Remove bearing inner races (25) from spindles of trunnion (20) as follows:

(1) Fabricate trunnion bearing pressing plate and pressing plug. (Refer to figures 2-38B and 2-38C.) As an alternate, Owatonna 952 bearing pulling attachment may be used in place of pressing plate. (Refer to figure 2-38D).

(2) Remove sealant from radius groove around trunnion (20, figure 2-38A) and inboard end of bearing inner race (25). Use a sharp plastic scraper to aid in sealant removal.

(3) Position fabricated bearing pressing plate around trunnion (20) at inboard end of bearing inner race (25) and secure with straps and bolts. Ensure that pressing plate fits snug to bearing inner race (25) and that sufficient clearance is available to allow plate to clear spindle of trunnion.

(4) Position trunnion (20) in hydraulic press and support bearing pressing plate with support blocks across parting line of pressing plate.

(5) Insert pressing plug into journal end of trunnion (20) and press trunnion from bearing inner race (25). During pressing operation, ensure that pressing plate does not damage spindle of trunnion. Do not permit trunnion to drop when trunnion spindle clears inner race.

g. Remove seal (24) from pillow blocks (28) using T101491 bearing puller. (Refer to figure 2-38E). Fabricate a pressure block from 0.25 to 0.50 inch phenolic, approximately 1.50 to 1.75 inches in diameter. Place pressure block in bottom of pillow block.

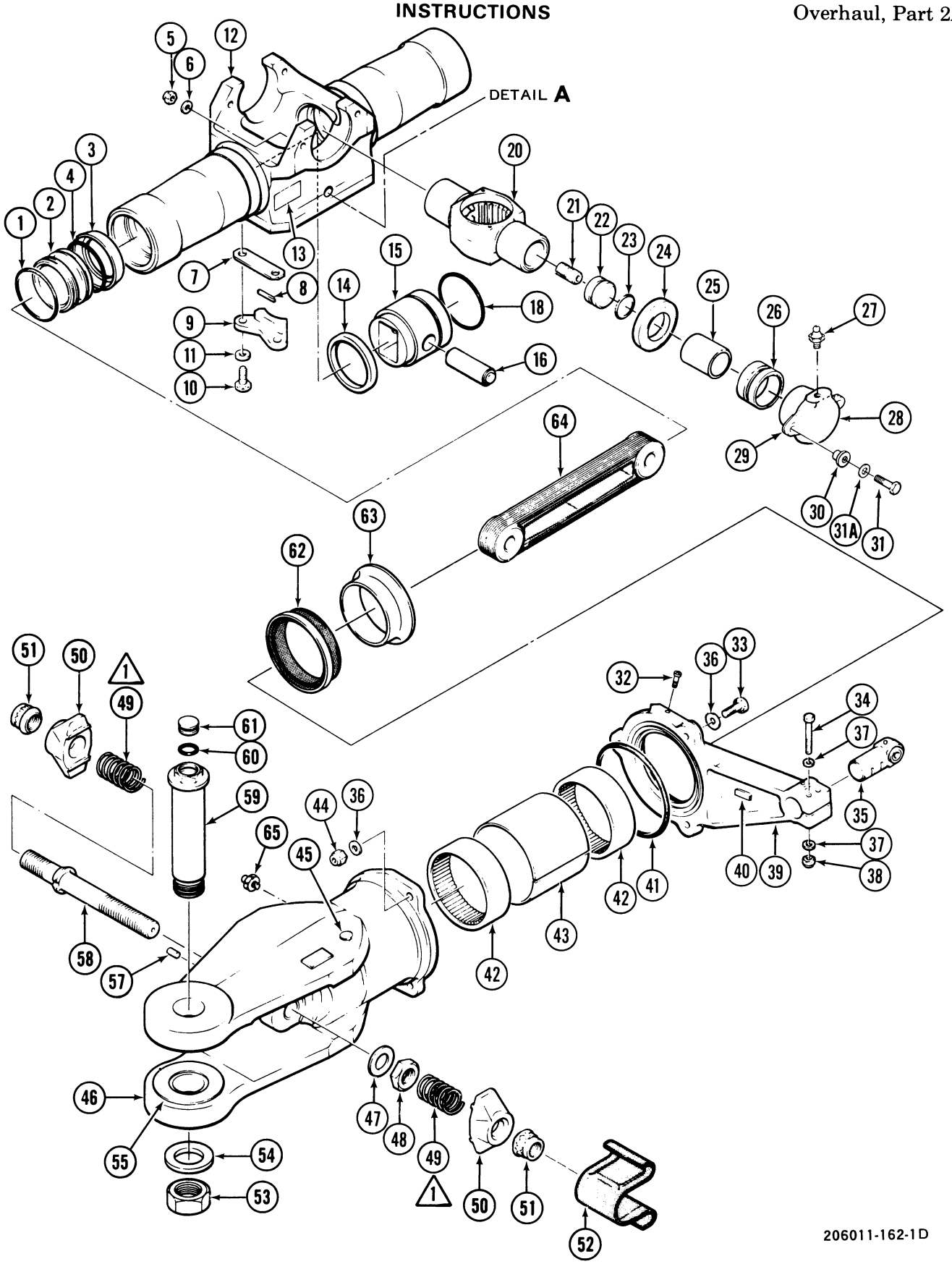

Figure 2-38A. Main rotor hub (Sheet 1 of 2)

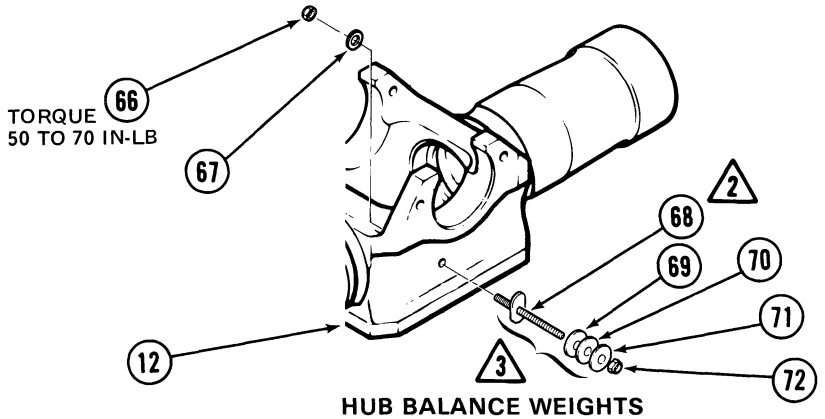

HUB BALANCE WEIGHTS
INSTALLATION TYPICAL FOR LEFT SIDE
RIGHT SIDE OPPOSITE EXCEPT AS NOTED.

DETAIL **A**

1. Packing
2. Retainer
3. Excluder
4. Packing
5. Nut
6. Washer
7. Laminated shim
8. Rubber stop
9. Static stop
10. Bolt
11. Washer
12. Yoke
13. Identification plate
14. Radius ring
15. Strap fitting
16. Strap pin
17. Deleted
18. Packing
19. Deleted
20. Trunnion
21. Adjusting screw
22. Thrust washer
23. Packing
24. Seal
25. Bearing inner race
26. Bearing
27. Grease fitting
28. Pillow block
29. Pillow block pad
30. Bushing
31. Bolt
31A. Countersunk washer
32. Relief valve
33. Bolt
34. Bolt
35. Pitch horn trunnion
36. Washer
37. Washer
38. Nut
39. Pitch horn
40. Identification plate
41. Packing
42. Bearing
43. Spacer
44. Nut
45. Spot decal
46. Grip
47. Washer
48. Nut
49. Spring
50. Blade latch
51. Nut
52. Closure
53. Nut
54. Washer
55. Buffer pad
56. Deleted
57. Pin
58. Strap bolt
59. Blade bolt
60. Packing
61. Blade bolt cap
62. Seal
63. Wear sleeve
64. Tension-torsion strap
65. Grease fitting
66. Nut
67. Washer
68. Retainer
69. Hub balance washer
70. Hub balance washer
71. Hub balance washer
72. Nut

NOTES:

1. Springs (49) are no longer required and may be removed.

2. Retainer (68) and balance washers (69, 70 and 71) are used only on 206L-3 helicopters.

3. Hub balance weights are installed as required at BHT. Maintain each set of hub balance weights intact.

206011-162-2D

Figure 2-38A. Main rotor hub (Sheet 2 of 2)

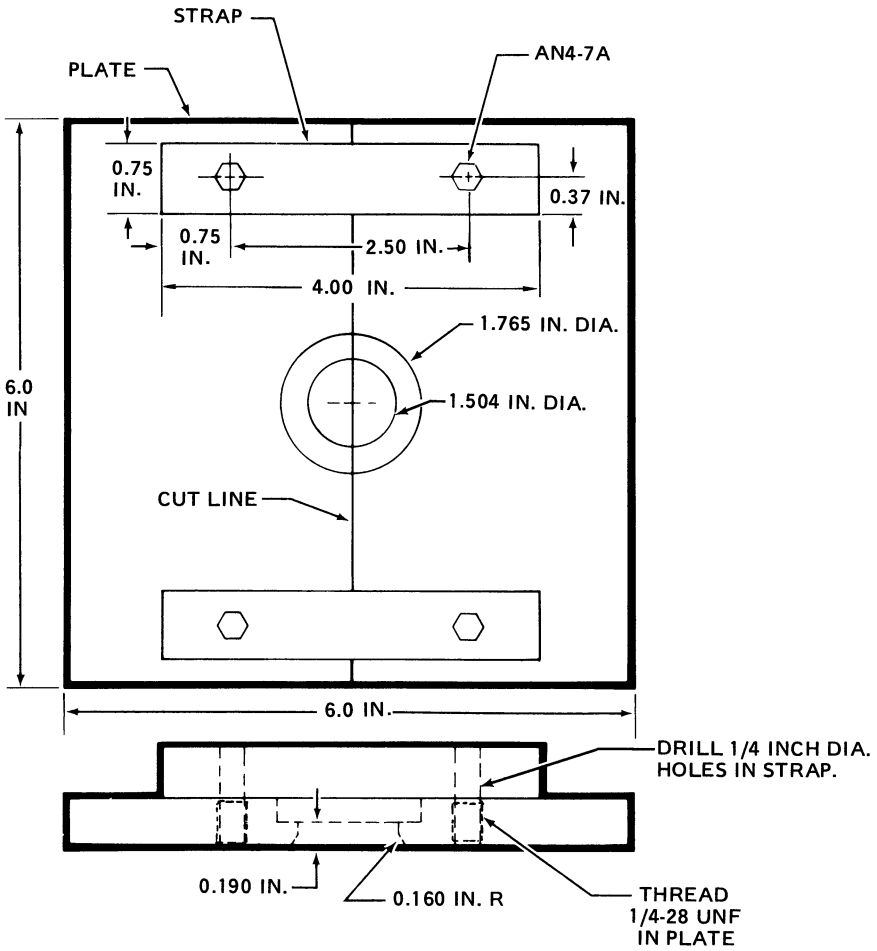

PRESSING PLATE - TRUNNION BEARING INNER RACE

MATERIALS: STRAPS AND PLATES
4130 or 4340 STEEL, 1/2 INCH THICK
AN4-7A BOLTS

PROCEDURES:
1. Machine 1.504 and 1.765 inch holes in center of a one piece 6 by 6 inch square plate.
2. Align, drill and tap the two straps and plate for four AN4-7A bolts.
3. Locate cut line (centerline) and cut plate in half.

PRESSING PLATE - 206-011-111 trunnion bearing inner race

206011-119C

Figure 2-38B. Trunnion bearing pressing plate work aid

ALL DIMENSIONS SHOWN IN INCHES — DRAWN TO SCALE

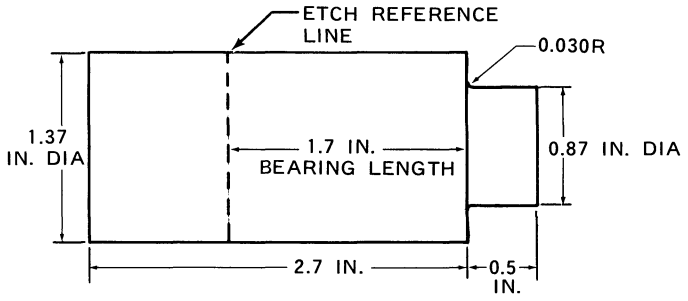

MATERIAL: Any Alloy Stock .

USE: Pressing trunnion bearing inner races from spindles of trunnion.

L206011-59

Figure 2-38C. Trunnion bearing pressing plug work aid

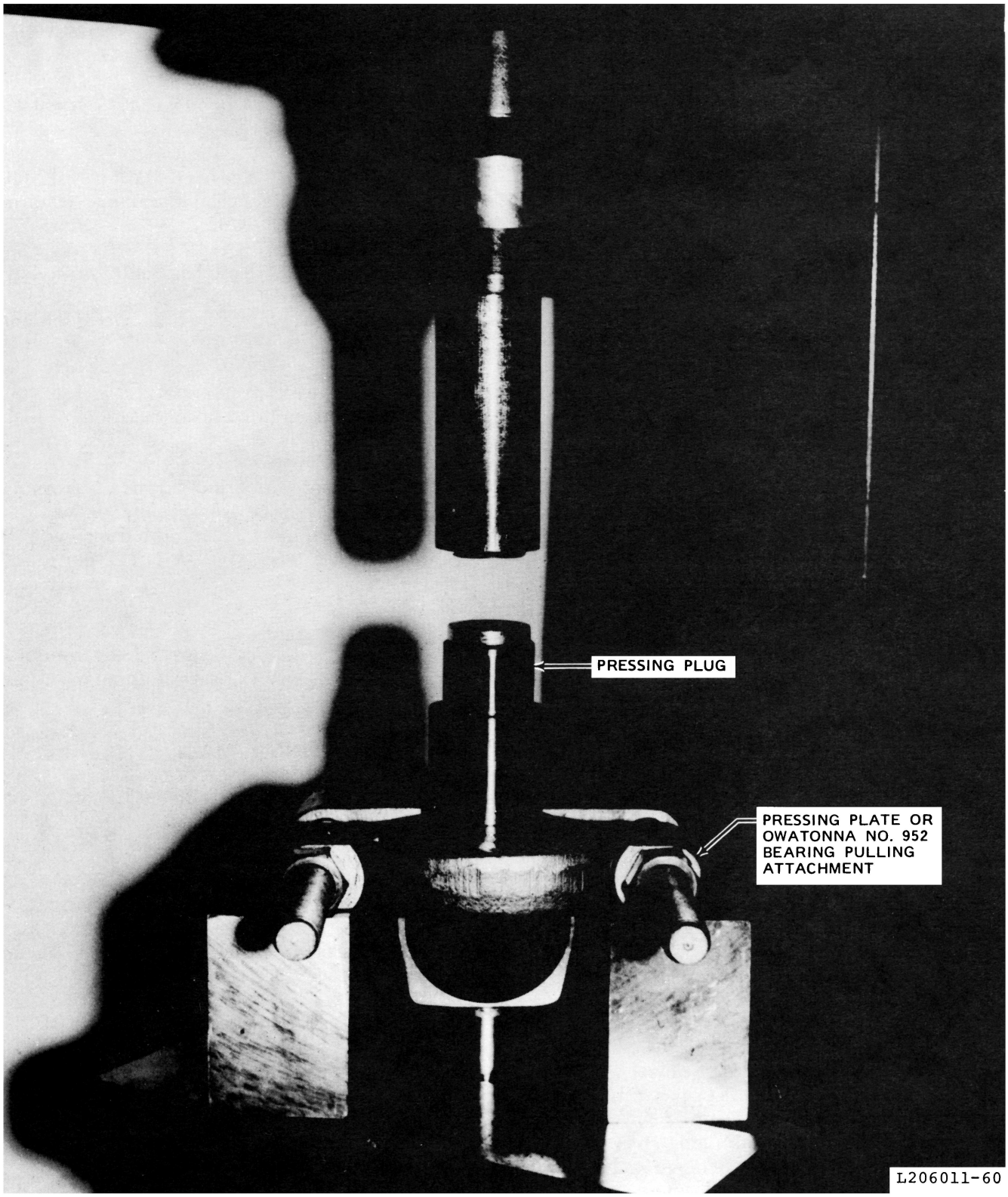

Figure 2-38D. Trunnion bearing inner race removal tool application

h. Invert pillow blocks (28, figure 2-38A) on work bench and apply heat lamp. When pillow blocks are heated, tap face of pillow blocks on a hard surface to remove bearings (26).

i. Remove nuts (53), washers (54), and blade bolts (59) from each grip (46). Remove blade bolt caps (61) from blade bolts (59) and empty internal balance weights, discard packings (60). Retain weights for future use during rebalancing of main rotor hub and blade.

j. Remove and disassemble both grips (46) as follows:

CAUTION

Do not allow main rotor grips to rotate on pitch change axis. If grips or yoke is allowed to rotate on the pitch change axis beyond 90 degrees, the main rotor grip retention strap/s must be replaced.

(1) Remove nuts (51), blade latches (50) and springs (49).

(2) Use T101554 socket and remove nuts (48), and washers (47) from strap bolts (58). Remove strap bolts.

(3) Remove nuts (44), washers (36), and bolts (33). Remove grips and pitch horns (39) from yoke (12). Do not allow hub weight to rest on wear sleeve (63); support yoke (12) with pieces of wood.

(4) Remove bolts (10), washers (11), static stops (9), rubber stops (8), and laminated shims (7).

(5) Trim sealant from around inboard end of strap fitting (15) and yoke (12). With hand pressure push tension-torsion straps (64) inboard in yoke to break sealant bond. If bond cannot be broken with hand pressure, insert a half-inch wooden dowel into yoke journal against strap fitting, and lightly tap from yoke. Remove strap end cap (17) from strap fitting pin (16).

(6) Fabricate grip retainer dowel work aid. (Refer to figure 2-38F) Insert grip retainer dowel work aid into retainers (2, figure 2-38A). Rock to break sealant around retainers, then remove retainers (2) from grips (46). Remove excluders (3) and packings (1 and 4) from retainers.

(7) Apply heat lamp to grips (46) and thoroughly heat, then remove roller bearings (42) and bearing spacer (43) from each grip.

(8) Remove closures (52), two grip pads (55), and spot decals (45) from each grip (46). Do not remove blade bushings (56) or pin (57).

(9) Trim sealant around wear sleeves (63) on spindles of yoke (12).

(10) Press wear sleeves (63) off of yoke (46). Inspect yoke (46) for possible damage resulting from wear sleeve removal.

k. Disassemble both pitch horns (39) as follows:

(1) Remove relief valve (32) from pitch horn (39).

(2) Remove retaining nuts (38), washers (37), and bolts (34) from pitch horn trunnions (35) and pitch horns (39).

(3) Fabricate pitch horn trunnion work aid. (Refer to figure 2-38G.) Insert tangs of work aid into pitch horn slot and tighten screw until trunnion can just be pulled out. Immediately release screw tension and remove trunnion work aid.

(4) Press seals (62, figure 2-38A) from pitch horns (39). Use care to prevent damage to pitch horns.

2-46C. CLEANING — MAIN ROTOR HUB.

a. Clean all parts with solvent (item 12).

CAUTION

Do not spin bearings while air-drying.

b. Dry parts with filtered compressed air and lint-free clean cloths.

2-46D. INSPECTION — MAIN ROTOR HUB.

Note

If records or physical appearance of main rotor hub indicate that the assembly has been subjected to an accident or incident outside the realm of normal usage, perform conditional inspection, paragraph 2-46E . If the main rotor hub does not require a conditional inspection, proceed with normal overhaul inspection, paragraph 2-46F .

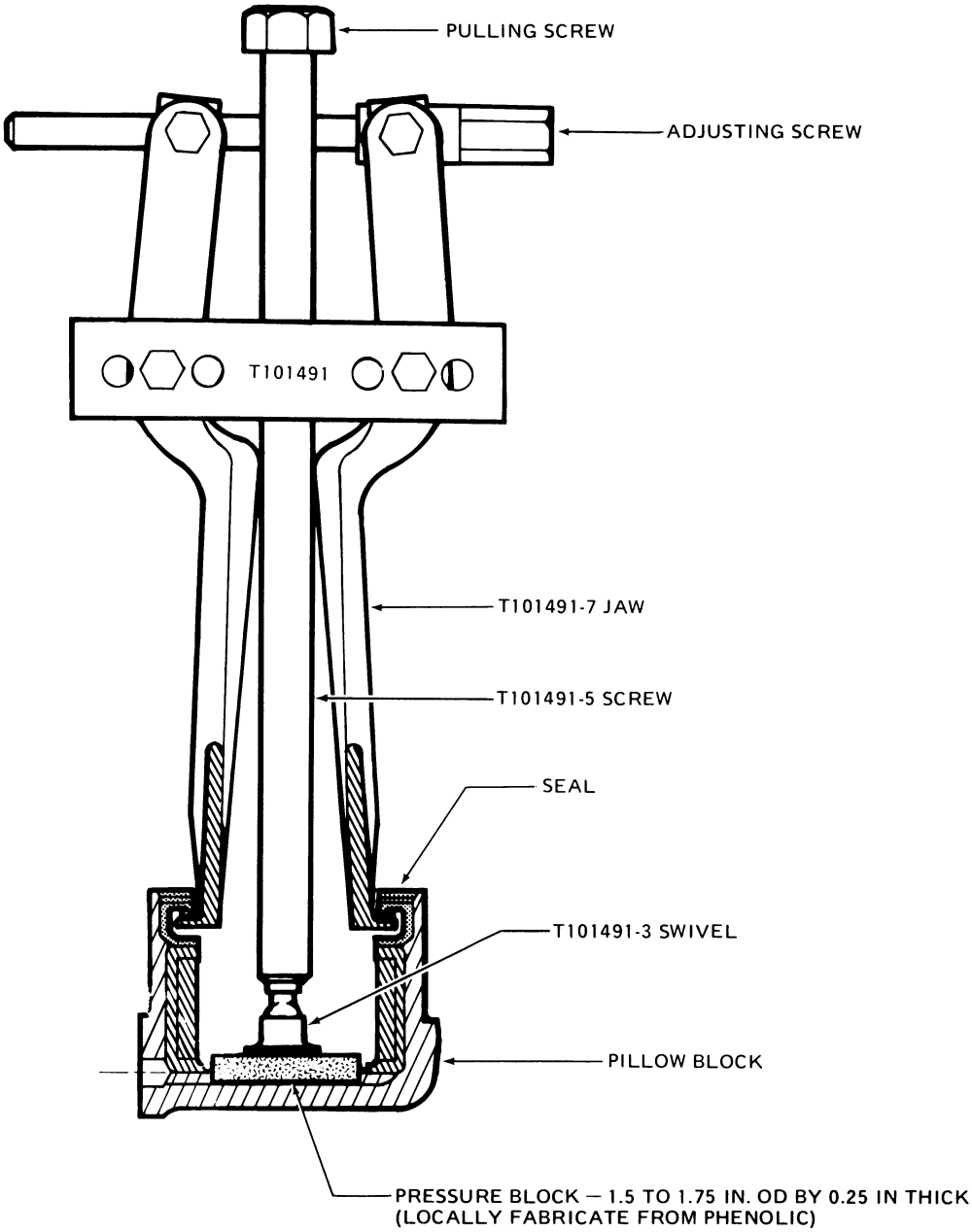

L206011-163

Figure 2-38E. Pillow block seal removal

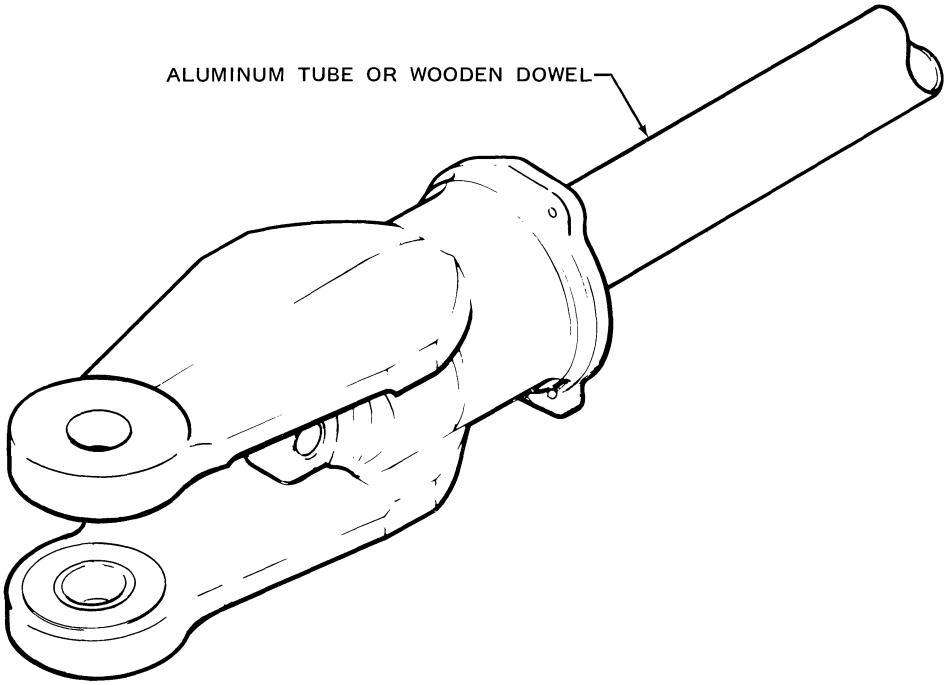

MATERIALS: Aluminum alloy tube 2.093 inch outside diameter by 14 inches in length or hardwood dowel. No paint finish required.

USE: Removal of outboard seal retainer from main rotor grips.

L206011-32A

Figure 2-38F. Main rotor grip retainer dowel work aid

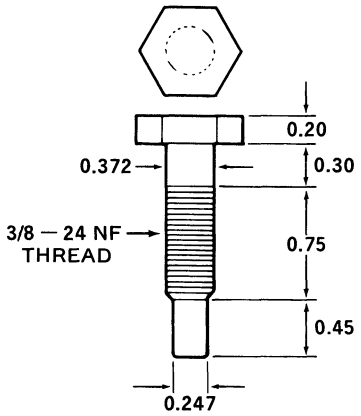

DETAIL 1
MAKE FROM STANDARD BOLT

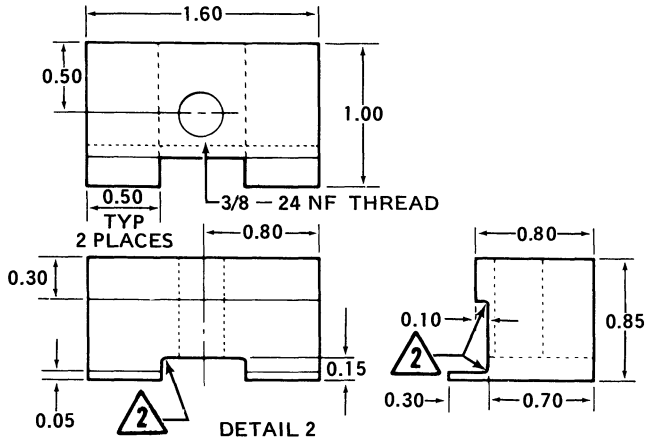

DETAIL 2
MAKE FROM 4130 STEEL

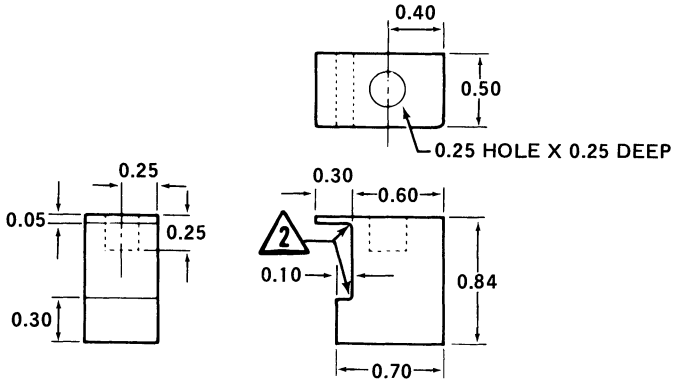

DETAIL 3
MAKE FROM 4130 STEEL

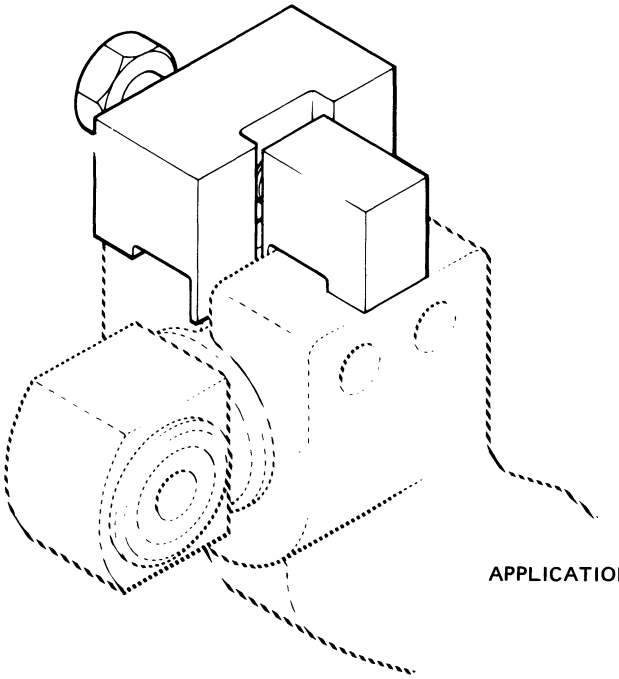

APPLICATION OF WORK AID

USE: To allow removal of pitch horn trunnion with less possibility of damage to pitch horn.

NOTES:

1. All dimensions are shown in inches.

2 Fillet radius 0.03 inch.

L206011-27A

Figure 2-38G. Pitch horn trunnion work aid

2-46E. Conditional Inspection — Main Rotor Hub

Note

If the following evaluation necessitates the replacement of any part, also replace both tension-torsion straps, both strap pins, and both strap bolts.

a. Carefully inspect all detail parts visually for any apparent damage or abnormal appearance. Visual defects that are cause for replacing the entire main rotor hub are:

(1) Pitch horn pulled from grip.

(2) A segment of sheared mast attached to trunnion.

(3) Obvious deformation of any other detail part within the main rotor hub would cause only the part that is deformed to be replaced along with both tension-torsion straps, both strap pins, and both strap bolts.

b. Any detail part within the main rotor hub which has sustained surface damage shall also be subject to surface damage inspection and repair as outlined in paragraph 2-46F . Surface damage in excess of overhaul limits will require replacing only the damaged part along with both tension-torsion straps, both strap pins, and both strap bolts.

c. Dimensionally check for indications of permanent deformation or damage to the parts specified in steps (1) through (6). A dimensional discrepancy of any part will cause only that part to be replaced along with both tension-torsion straps, both strap pins, and both strap bolts.

(1) Yoke (12, figure 2-38A).

(a) Check straightness as follows:

1 Inspect machined surfaces of yoke. Replace hub assembly if more than 0.001 inch per inch deviation is found.

2 Inspect pillow block bolts (31) for shear offset (straightness). Replace hub assembly if any evidence of bolt yielding is found.

(b) Inspect retainer (68) for alignment and damaged threads.

(c) Inspect hub balance washers (69, 70, and 71) for damage and straightness.

(d) Inspect attaching nuts (66 and 72) for thread damage.

(e) Inspect balancing washer attachment holes for cracks on outer or inner surfaces of yoke (12).

(f) Check trunnion bearing bores. Inspect trunnion bearing bore diameters for out-of-round condition. If out-of-round exceeds 0.001 inch, remove primer and cadmium plate and remeasure. If bore is still out-of-round in excess of 0.001 inch, the yoke shall be replaced.

(g) Check yoke precone angle and spanwise straightness with a straight edge. Yoke lower surface is not included in this inspection. Replace hub assembly if more than 0.001 inch per inch deviation is found.

(2) Grips (46) and pitch horns (39).

(a) Inspect bolt holes for blade bolts (59) through grip bushings, and bolt holes for strap bolts (58) to ensure they are round within 0.001 inch. Elongation of grip bushings in excess of 0.002 inch is cause for replacement of entire main rotor hub.

(b) Inspect mating surfaces between grips (46) and pitch horns (39) for deformation on a surface plate. Surface deformation greater than 0.0015 inch is caused for replacement of grips and pitch horns.

(c) Inspect horn surfaces of pitch horns (39) for deformation on a surface plate. Horn surface deformation greater than 0.002 inch is cause for replacement of pitch horns.

(d) Inspect inboard surfaces of the lug for the pitch horn trunnion (35) for deformation. Lug surfaces must be parallel to the pitch horn (39) and to grip (46) surfaces. Deformation greater than 0.0025 inch is cause for replacement of pitch horn.

(3) Blade bolt (59).

(a) Remove dry film lubricant from shank of blade bolts (59) by scrubbing with abrasive pads (item 9) and MEK (item 17).

(b) Measure shank diameter of blade bolts (59) in at least six locations. If measurements vary more than 0.0007 inch, replace blade bolts.

(c) Roll blade bolts (59) on a surface plate. Deformation greater than 0.0015 inch is cause for replacement of blade bolts.

(4) Strap bolts (58).

(a) Measure shank diameter of strap bolts (58) in at least six locations. If measurements vary more than 0.0008 inch, remove cadmium plating and remeasure. If measurements vary more than 0.0005 inch, replace strap bolts.

(b) Roll strap bolts (58) on a surface plate. Deformation greater than 0.0015 inch is cause for replacement of strap bolts.

(5) Static stops (9). Inspect static stops for cracks or deformation in main rotor mast contact area. Replace stops if damage is evident.

(6) Trunnion (20).

(a) Dimensionally check for indications of deformation or damage to the parts. If a dimensional discrepancy is found on any part, replace only that part, unless otherwise stated.

(b) Hold one spindle of trunnion in a vee block. Set a dial indicator on the opposite spindle. Rotate the trunnion. Total indicator reading should not exceed 0.004 inch.

d. Perform Normal Inspection, paragraph 2-46F.

2-46F. Normal Inspection — Main Rotor Hub.

a. If any main rotor hub part shows indications of excessive wear, or is not within tolerance, check mating part for a abnormal wear.

b. Perform a fluorescent penetrant inspection on the following parts. Refer to Section I for approved fluorescent penetrant material and usage.

figure 2-38A ,

Index No.	Nomenclature
9	Static stop
14	Radius ring
39	Pitch horn
46	Grip (Refer to step c.)
28	Pillow block
48	Nuts
50	Blade latches

After completion of inspection, demagnetize part and check with a field indicator to ensure demagnetization.

c. Inspect grips (46, figure 2-38A) in accordance with the following:

(1) Special attention shall be given to the inspection for defects in area A, figure 2-38H .

(2) If a defect is found, contact Product Support Manager, Bell Helicopter Textron, P.O. Box 482, Fort Worth, Tx 76101.

(3) There may be a decrease in the brightness of indications on surfaces that have been shot peened. Refer to figure 2-38J for damage limits.

d. Perform a magnetic particle inspection on parts listed in table 2-5B. Use procedures given in step listed in table 2-5B .

(1) General.

(a) Use the wet, continuous, fluorescent method. Use of fluorescent coated particles with ultra violet light is mandatory.

(b) Thoroughly demagnetize all parts after inspection.

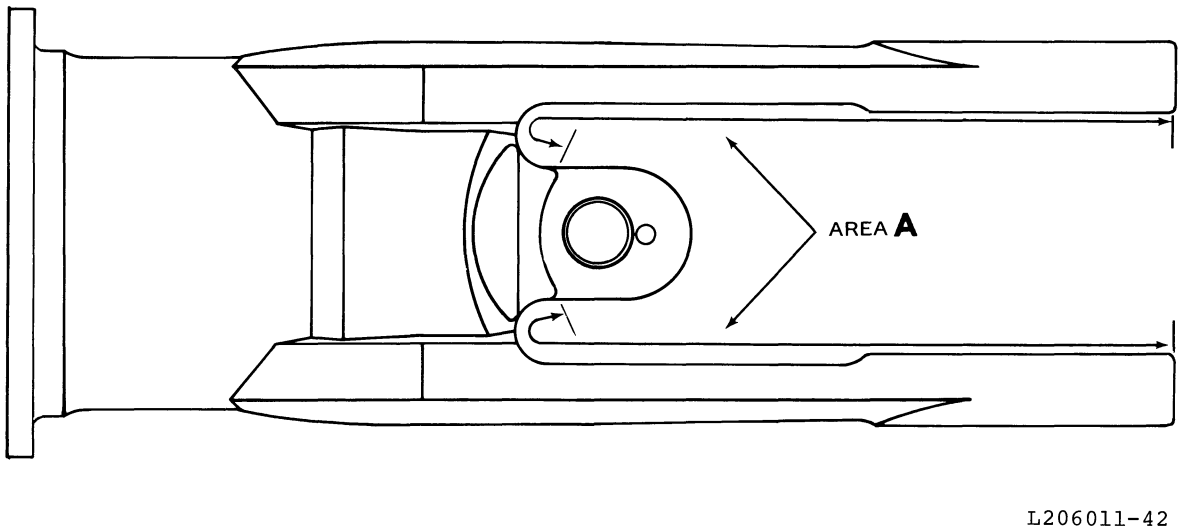

Figure 2-38H. Main rotor grip inspection criteria

(c) The following general formula shall be used for determining electrical current. Ampereturns divided by number of coil-turns (on coil name plate) = Amperes.

EXAMPLE: For a five (5) turn coil, 11,000 ampere-turns ÷ 5 coil-turns = 2,2000 amperes.

Note

If AC magnetic particle inspection equipment is used, use 60 percent of DC current specified.

Table 2-5B. Magnetic particle inspection

FIGURE 2-38A, INDEX NO.	NOMENCLATURE	REFER TO STEP
12	Yoke	(2)
20	Trunnion	(3)
15	Strap fitting	(4)
16	Strap pin	(5)
58	Strap bolt	(6)
59	Blade bolt	(7)

(2) Inspect yoke (12, figure 2-38A) as follows:

(a) Magnetic particle indications interpreted as cracks, seams, laps, or shuts, are cause for rejection.

WARNING

If crack, seam, lap, or shut is found, remove yoke from service and notify:

BELL HELICOPTER TEXTRON

ATTENTION: Customer Support and Service Division
P.O. Box 482
Fort Worth, Tx 76101

TELEPHONE: (817) 280-2563 (Day)
(817) 280-2551 (Night)

TWX: 910-890-5702

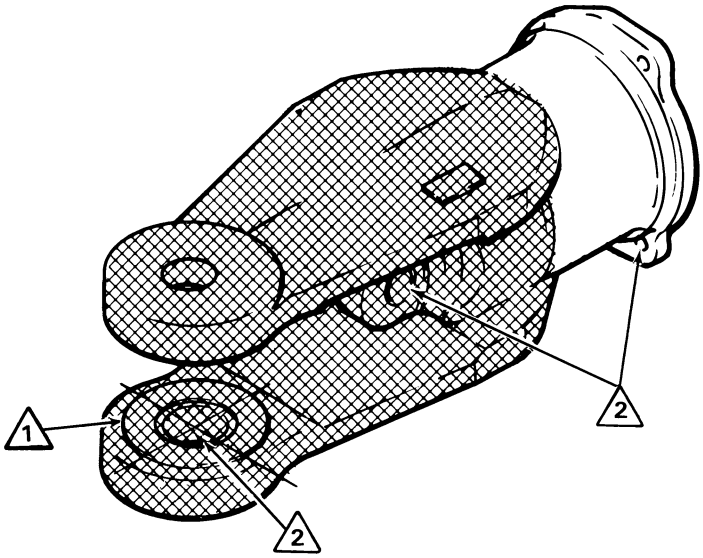

DAMAGE LOCATION SYMBOLS

TYPE OF DAMAGE	MAXIMUM DAMAGE AND REPAIR DEPTH	
MECHANICAL	0.005 in. before and after repair	0.010 in. before and after repair
CORROSION	0.0025 in. before and 0.005 in. after repair	0.005 in. before and 0.010 in. after repair
MAXIMUM AREA PER FULL DEPTH REPAIR	0.50 sq. in.	Not critical
NUMBER OF REPAIRS	Not critical	Not critical
EDGE CHAMFER	0.005 in.	0.040 in.
BORES	0.001 inch for 1/4 circumference	

NOTES:

1. The area of grip surfaces mating with the main rotor blade should not exceed one-half of any quadrant.
2. Bore damage not to exceed 0.001 inch for one-fourth circumference.

L206011-106

Figure 2-38J. Grip damage limits

(b) Place a 1.0 inch diameter control conductor through yoke and place bar and yoke between contact heads of the machine. Pass 2500 amperes through bar. Examine yoke 100 percent for indications interpreted as cracks, seams, laps, or shuts. Special attention shall be given to the fillet radii, wear sleeve journal, inboard bearing journal, tooling holes, and mating surfaces. Refer to figure 2-38K .

(c) Rotate Yoke 120 degrees around central conductor and repeat step (b).

(d) Rotate yoke an additional 120 degrees and repeat step (b).

(e) Place yoke in the coil so axis of yoke is 90 degrees to direction of current flow through the coil. Magnetize the yoke using 9000 ampere-turns magnetizing force. Inspect yoke completely for indications from two directions.

(3) Magnetic particle inspection of trunnion (20, figure 2-38A).

CAUTION

Ensure that all traces of sealant are removed from trunnion after removal of bearing inner races.

During accomplishment of magnetic particle inspection, give particular attention to each trunnion spindle fillet radius.

Note

For cleaning of sealant from trunnion prior to magnetic particle inspection use a plastic scraper, fine abrasive pad (item 9), and MEK (item 17).

(a) Thoroughly degrease trunnion.

(b) Place trunnion longitudinally between contact heads of the machine. Pass 2000 amperes through trunnion.

(c) Inspect for indications interpreted as cracks, seams, laps, or shuts.

(d) Place a 1-inch diameter central conductor through internal spline of trunnion and the central conductor between contact heads of the machine. Pass 1000 amperes through central conductor.

(e) Inspect for indications.

(f) Rotate trunnion 180 degrees around central conductor and pass 1000 amperes through central conductor.

(g) Inspect for indications.

(h) Place trunnion longitudinally in coil. Magnetize trunnion with 15,000 ampere-turns.

(i) Inspect for indications.

(4) Inspect strap fittings (15, figure 2-38A) as follows:

(a) Place a 1.0 inch diameter central conductor through strap fitting and place bar and strap fitting between contact heads of the machine. Pass 1500 amperes through bar and inspect strap fitting completely for indications.

(b) Place strap fitting in coil so that axis of the strap fitting is 90 degrees to direction of current flow through the coil (Refer to figure 2-38L) Magnetize strap fitting using a 9000 ampere-turns magnetizing force. Inspect strap fitting completely for indications, both inside and outside diameters.

(5) Inspect strap pins (16, figure 2-38A) in accordance with the following:

(a) Place strap pin between contact heads of the machine. Pass 600 amperes through the strap pin and inspect completely for indications.

(b) Place strap pin in the coil such that axis of the strap pin is 90 degrees to direction of current flow through the coil. Magnetize strap pin using a 15,000 ampere-turns magnetizing force. Inspect strap pin completely for indications.

(6) Inspect strap bolts (58) as follows:

(a) Place strap bolt between contact heads of the machine. Pass 900 ampere through strap bolt and inspect completely for indications.

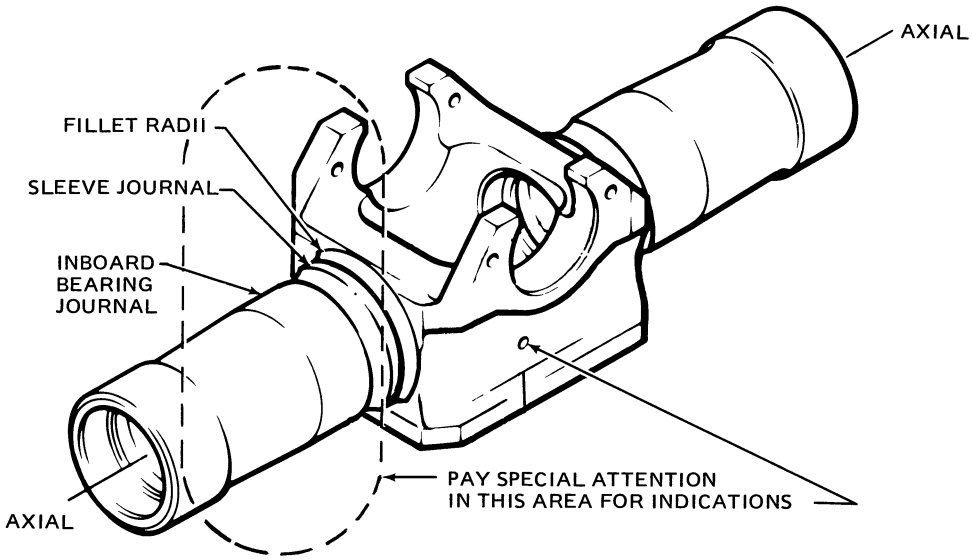

Figure 2-38K. Yoke inspection criteria

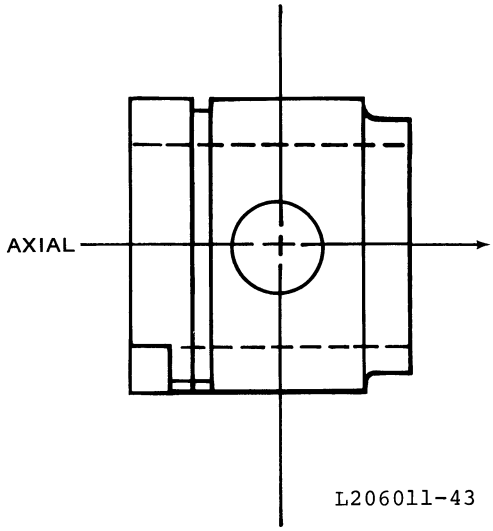

Figure 2-38L. Strap fitting inspection criteria

(b) Place strap bolt in coil so that axis of strap bolt is 90 degrees to direction of current flow through the coil. Magnetize strap bolt using a 9000 ampere-turns magnetizing force. Inspect strap bolt completely for indications.

(7) Inspect blade bolt (59).

(a) Thoroughly degrease blade bolt.

(b) Place blade bolt between contact heads of the machine and pass 1800 amperes through blade bolt.

(c) Inspect completely for indications interpreted as cracks, seams, laps, or shuts.

(d) Place blade bolt in coil with longitudinal axis of the blade bolt perpendicular to plane of the coil. Magnetize blade bolt using a 10,000 ampere-turns magnetizing force.

(e) Inspect completely for indications.

Note

Limit charts are provided to show the required fit between mating parts. They also provide replacement dimensions as a guide for replacement of worn parts. It is not intended that all dimensions listed on limit charts be checked as a prescribed overhaul procedure; however, parts that show evidence of wear or physical damage must be checked dimensionally.

e. Inspect main rotor hub parts dimensionally for wear and damage. (Refer to figure 2-38M .) Replace parts that exceed limits.

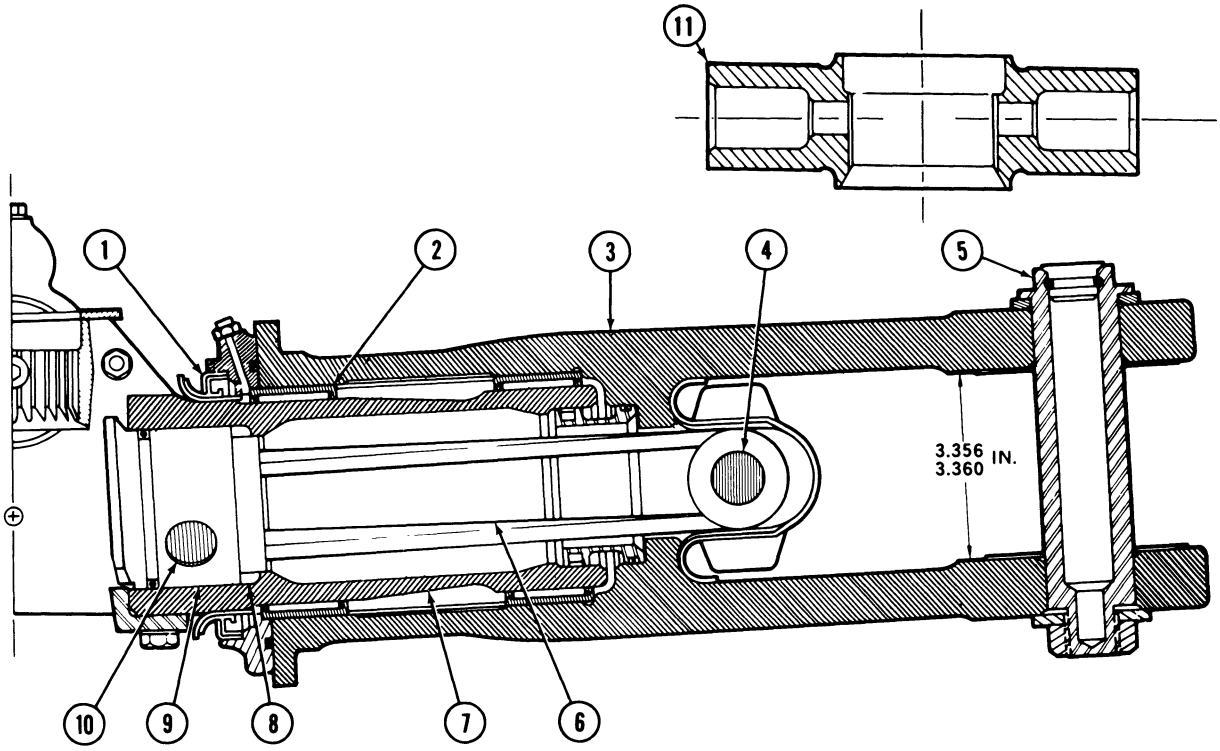

ITEM	NOMENCLATURE		MIN. (Inches)	MAX.
1	Pitch Horn — Seal Bore	ID	4.6245	4.6275
	Pitch Horn — Bearing Bore	ID	4.000	4.004
2	Bearings	ID	3.5000	3.5005
		OD	3.9995	4.0000
3	Grip — Bearing Journal	ID	3.9995	4.005
	Grip — Retainer Bore	ID	2.750	2.752
	Grip — Strap Bolt Hole	ID	0.874	0.877
	Grip — Bushing Bore	ID	1.520	1.523
4	Strap Bolt	OD	0.8735	0.8745
5	Blade Bolt	OD	1.5188	1.5199
6	Tension — Torsion Strap — Bushing Holes	ID	0.8750	0.877
	Tension — Torsion Strap — Free Length	—	9.487	9.507
7	Yoke — Pillow Block Bore	ID	2.625	2.627
	Yoke — Radius Ring Bore	ID	2.752	2.755
	Yoke — Retainer Bore	ID	2.750	2.752
	Yoke — Wear Sleeve	OD	3.6235	3.6265
	Yoke — Bearings Journal	OD	3.497	3.5005
8	Radius Ring	ID	2.380	2.385
		OD	2.735	2.745
9	Strap Fitting — Strap Pin Hole	ID	0.8750	0.8755
	Strap Fitting — Radius Ring	OD	2.365	2.375
	Strap Fitting — Yoke	OD	2.748	2.750
10	Strap Pin	OD	0.8735	0.8745
11	Trunnion	OD	1.5004	1.5013

206011-199

Figure 2-38M. Main rotor hub wear limits

f. Inspect yoke (12, figure 2-38A) for evidence of corrosion and mechanical damage. Refer to figure 2-38N for damage limits. Special attention shall be given to the pillow block bores, inboard bearing journals, wear sleeve journal, and adjoining fillet radii. Refer to figure 2-38M for wear limits.

g. Inspect yoke (12, figure 2-38A), retainer (2), static stops (9), radius rings (14), strap fittings (15), strap pins (16), pitch horns (39), blade latches (50), grips (46), strap bolts (58), pillow blocks (28) and blade bolts (59), for cracks, mechanical damage, and corrosion. (Refer to figure 2-38M through 2-38Z.) Replace parts that are cracked and/or exceed limits.

h. Inspect tension-torsion straps (64, figure 2-38A) for wire strand failures and for a abnormalities as follows:

(1) A total of 25 broken wires (50 loose ends) protruding through urethane coating of any one of the eight outside corners is cause for rejection. A total of 400 loose ends found over the entire strap surface is cause for rejection.

(2) Strap bulge in excess of 0.06 inch outside the normal straight contour is cause for rejection. Bulging of strap cross-section in any area from the ends of the strap to 3.5 inches inboard is normal and not cause for rejection.

(3) Cracks in urethane coating are not acceptable.

(4) Delamination of urethane coating from the bushing is acceptable. Delamination in any other area is cause for rejection.

(5) A permanent set in twist may occur and is not cause for rejection.

(6) Strap stiffness can vary when flexed in an unloaded condition and is not cause for rejection.

(7) Oil contamination resulting in swelling of the urethane coating is cause for rejection. If oil has come in contact with strap but swelling has not occurred, strap assembly shall be cleaned with denatured alcohol (item 119) to remove all traces of oil.

(8) Displacement of urethane around bushings and inner surface of wire bundle is cause for rejection.

(9) Cracks in strap bushings are cause for rejection. Inspect using a ten (10) power magnifying glass.

(10) Inspect bushings for fretting corrosion. A maximum of 0.005 inch in depth for 25 percent total area is allowed on bushing flange surfaces. A maximum of 0.002 inch in depth is allowed for one-fourth of total bushing bore surfaces.

(11) Replace tension-torsion strap that exceeds these limits.

i. Visually inspect roller bearings (42) for roughness, spalling, scoring, pitting, flaking, etc. Inspect bearing journals on yoke (12) for similar conditions.

j. Inspect interior of yoke for damage to primed surfaces, touch up, as required, with primer (item 102).

k. Inspect cadmium plated surfaces of yoke for condition. Plating solution shall be applied if necessary. (Refer to Section I).

l. Inspect pitch horn trunnions (35) for axial wear not to exceed 0.020 inch. Roller bearings in trunnions will normally have a feel of ratcheting and drag during rotation due to preload. Purge lubricate trunnion with grease (item 21).

m. Inspect interior of grips (46) for wear of solid film lubricant coating. Touch up coating. (Refer to Section I)

n. Inspect springs (49), if used, for correct rate and free length of 1.53 inches. Apply compression load of 3.5 pounds and check for a length of 0.69 to 0.81 inch.

o. Inspect buffer pads (55) on grips (46) and pillow block pads (29) on pillow blocks (28) for condition. Replace if loose or if severe fretting has occurred.

p. Inspect yoke (12) for impression from flap restraint arms. Impression shall not exceed limits shown if figure 2-38M.

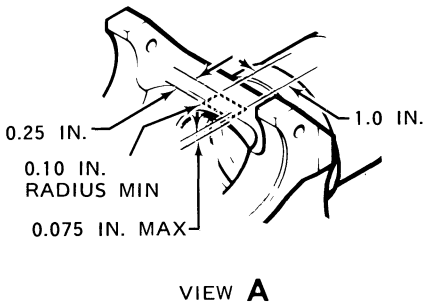

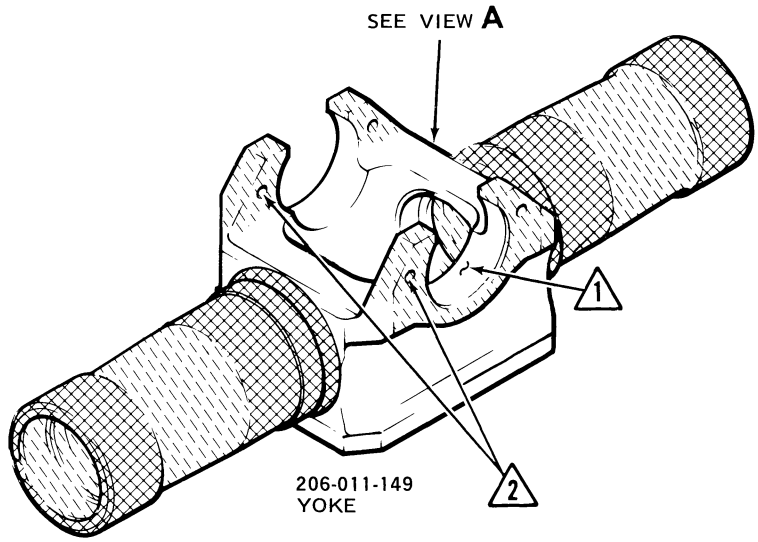

DAMAGE LOCATION SYMBOLS

TYPE OF DAMAGE	MAXIMUM DAMAGE AND REPAIR DEPTH		
MECHANICAL	0.002 in. before and after repair	0.010 in. before and after repair	0.020 in. before and after repair
CORROSION	0.002 in. before and after repair	0.010 in. before and after repair	0.020 in. before and after repair
MAXIMUM AREA PER FULL DEPTH REPAIR	0.50 sq. in.	0.50 sq. in.	Not critical
NUMBER OF REPAIRS	Two per segment, no overlap	Two per segment, no overlap	Not critical
EDGE CHAMFER	0.030 in.	0.030 in.	0.040 in.

NOTES: 1 Nicks, scratches or tool marks are not permitted in pillow block bores. Polish with a circular motion to a bright surface.

2 Bore damage not to exceed 0.002 inch for one-fourth circumference.

L206011-110

Figure 2-38N. Yoke damage limits

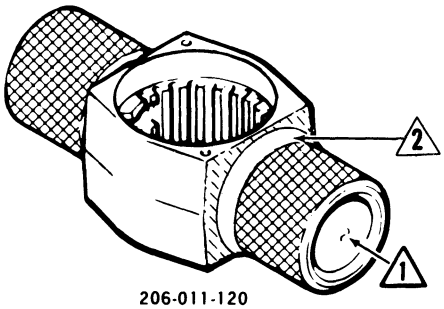

206-011-120
TRUNNION

DAMAGE LOCATION SYMBOLS

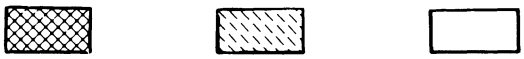

TYPE OF DAMAGE	MAXIMUM DAMAGE AND REPAIR DEPTH		
MECHANICAL DAMAGE & CORROSION	0.002 in. before and after repair	0.10 in. before and after repair	0.020 in. before and after repair (1)
MAXIMUM AREA PER FULL DEPTH REPAIR	0.25 sq. in.	0.10 sq. in.	0.50 sq. in.
NUMBER OF REPAIRS	Two per side diametrically opposed	Not critical, but none in radius in lower half	Not critical
EDGE CHAMFER	0.040 in.	0.040 in.	0.040 in.
SPLINE:			
Depth:	One-third of spline		
Length:	One-half spline		
Number:	Three splines maximum		

NOTE:

(1) Corrosion cleanup on ID of spindle wall is 0.020 inch with a total maximum repair diameter of 0.040 inch. Ensure that the 30° bevel edge is maintained at spindle outboard end and that 0.160 inch radius is maintained on inboard end of spindle journal.

(2) No repairs allowed in radii.

206011-200

Figure 2-38P. Trunnion damage limits

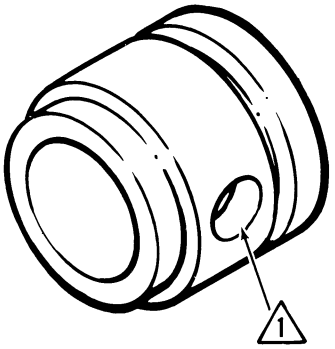

206—011—124
STRAP FITTING

DAMAGE LOCATION SYMBOL

TYPE OF DAMAGE	MAXIMUM DAMAGE AND REPAIR DEPTH
MECHANICAL	0.002 in. before and after repair
CORROSION	0.002 in. before and after repair
MAXIMUM AREA PER FULL DEPTH REPAIR	0.25 sq. in.
NUMBER OF REPAIRS	One inside and one outside
EDGE CHAMFER	0.020 in.

NOTES: 1 Bore damage not to exceed 0.0005 inch for one-fourth circumference.

L206011-48

Figure 2-38Q. Strap fitting damage limits

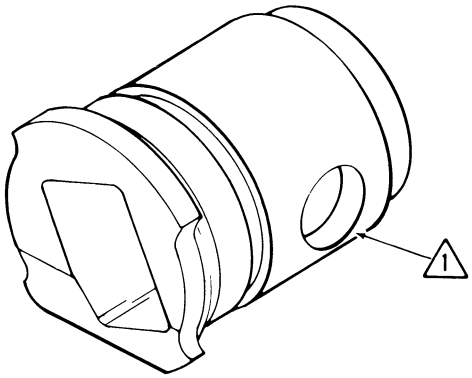

206-011-150
STRAP FITTING

DAMAGE LOCATION SYMBOL

TYPE OF DAMAGE	MAXIMUM DAMAGE AND REPAIR DEPTH
MECHANICAL	0.002 in. before and after repair
CORROSION	0.002 in. before and after repair
MAXIMUM AREA PER FULL DEPTH REPAIR	0.25 sq. in.
NUMBER OF REPAIRS	One inside and one outside
EDGE CHAMFER	0.020 in.

NOTES: 1 Bore damage not to exceed 0.0005 inch for one-fourth circumference

206011-201

Figure 2-38R. Strap fitting damage limits

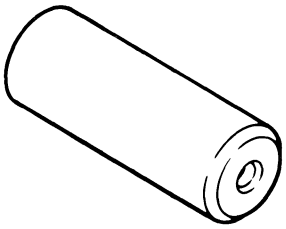

STRAP PIN

DAMAGE LOCATION SYMBOL

TYPE OF DAMAGE	MAXIMUM DAMAGE AND REPAIR DEPTH
MECHANICAL	Minor damage on ends or edges of strap pin may be repaired. Any other damage is cause to scrap pin.

L206011-49A

Figure 2-38S. Strap pin damage limits

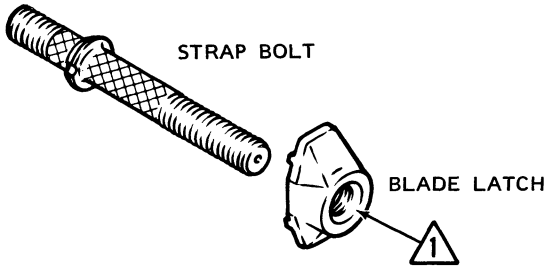

DAMAGE LOCATION SYMBOLS

	MAXIMUM DAMAGE AND REPAIR DEPTH	
MECHANICAL	0.002 in. before and after repair	0.030 in. before and after repair
CORROSION	0.002 in. before and after repair	0.030 in. before and after repair
MAXIMUM AREA PER FULL DEPTH REPAIR	0.10 sq. in.	Not critical
NUMBER OF REPAIRS	One	Not critical
EDGE CHAMFER	Not critical	0.060 in.

THREAD:

Depth:	One-third of thread
Length:	One-half circumference
Number:	Two per segment

NOTES:

1. Bore damage not to exceed 0.002 inch for full circumference.

L-206011-37A

Figure 2-38T. Strap bolt and blade latch damage limits

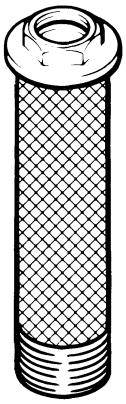

BLADE BOLT

DAMAGE LOCATION SYMBOLS

TYPE OF DAMAGE	MAXIMUM DAMAGE AND REPAIR DEPTH	
MECHANICAL	0.002 in. before and after repair	0.010 in. before and after repair
CORROSION	0.002 in. before and after repair	0.010 in. before and after repair
MAXIMUM AREA PER FULL DEPTH REPAIR	0.25 sq. in.	Not critical
NUMBER OF REPAIRS	Two	Not critical
EDGE CHAMFER	Not applicable	0.03 in.
THREADS:		
Depth:	One-third of thread	
Length:	One quarter inch	
Number:	One	

L206011-26B

Figure 2-38U. Blade bolt damage limits

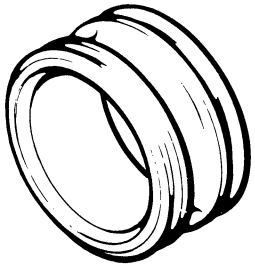

206—011—130
RETAINER

TYPE OF DAMAGE	
MECHANICAL AND CORROSION	Surface damage to retainer does not require repair, provided the function of seals are not impaired or deteriorate during service.

L206011-45A

Figure 2-38V. Retainer damage limits

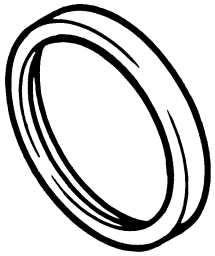

206—011—126
RADIUS RING

DAMAGE LOCATION SYMBOL

TYPE OF DAMAGE	MAXIMUM DAMAGE AND REPAIR DEPTH
MECHANICAL	0.002 in. before and after repair
CORROSION	0.001 in. before and 0.002 in. after repair
MAXIMUM AREA PER FULL DEPTH REPAIR	0.05 sq. in.
NUMBER OF REPAIRS	Two
EDGE CHAMFER	0.010 in.

L206011-47

Figure 2-38W. Radius ring damage limits

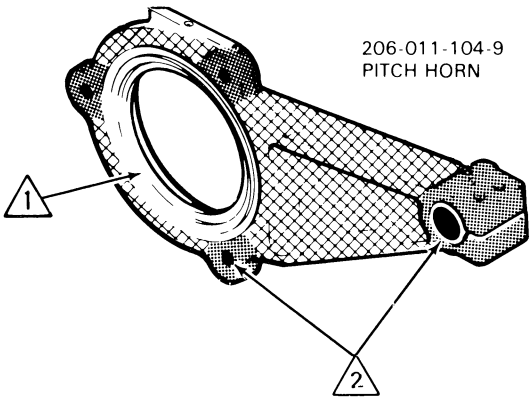

DAMAGE LOCATION SYMBOLS

TYPE OF DAMAGE	MAXIMUM DEPTH AND REPAIR AREA		
MECHANICAL	0.010 in. before and after repair	0.030 in. before and after repair	0.040 in. before and after repair
CORROSION	0.005 in. before repair and 0.010 in. after repair	0.015 in. before repair and 0.030 in. after repair	0.020 in. before repair and 0.040 after repair
MAXIMUM AREA PER FULL DEPTH REPAIR	0.10 sq. in.	0.25 sq. in	Not critical
NUMBER OF REPAIRS	One per lug	Two on arm two on other areas	Not critical
EDGE CHAMFER	0.030 in.	0.060 in.	0.080 in.
BORES	0.002 inch for one-fourth circumference		

NOTES: (1) Surfaces of the reservoir mount and the seal must not have damage and subsequent cleanup of such nature as will cause the seals or packings to leak.

(2) Bore damage not to exceed 0.002 inch for one-fourth circumference.

L206011-155

Figure 2-38X. Pitch horn damage limits

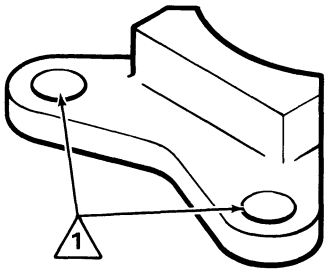

206—011—121
STATIC STOP

DAMAGE LOCATION SYMBOL

TYPE OF DAMAGE	MAXIMUM DAMAGE AND REPAIR DEPTH
MECHANICAL	0.020 in. before and after repair
CORROSION	0.010 in. before and 0.020 in. after repair
MAXIMUM AREA PER FULL DEPTH REPAIR	Not critical
NUMBER OF REPAIRS	Not critical
EDGE CHAMFER	0.060 in.

NOTES: 1 Bore damage not to exceed 0.002 inch for full circumference.

L206011-46

Figure 2-38Y. Static stop damage limits

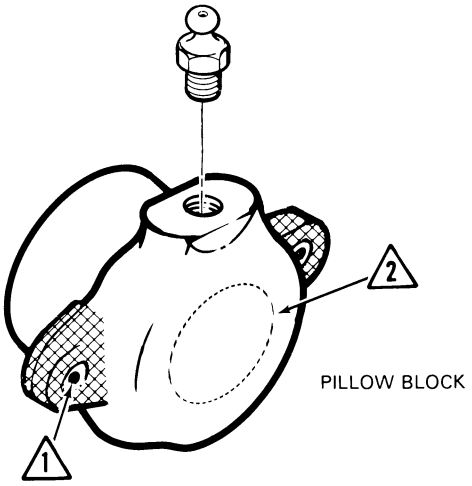

DAMAGE LOCATION SYMBOLS

TYPE OF DAMAGE	MAXIMUM DEPTH AND REPAIR AREA	
MECHANICAL	0.010 in. before and after repair	0.030 in. before and after repair
CORROSION	0.005 in. before repair 0.010 in. after repair	0.015 in. before repair 0.030 in after repair
MAXIMUM AREA PER FULL DEPTH REPAIR	0.10 sq. in.	0.25 sq. in.
NUMBER OF REPAIRS	One per lug	Two per part
EDGE CHAMFER	0.030 in.	0.040 in.

NOTES:

1. Bore damage not to exceed 0.002 inch for one-fourth circumference.
2. Depth of thrust washer wear area not to exceed 0.020 inch. Surface finish 32 micro inches or better.

206011-161B

Figure 2-38Z. Trunnion pillow block damage limits

2-46G. REPAIR — MAIN ROTOR HUB.

a. Replace all packings, self-locking nuts, unserviceable attaching hardware, and seals.

b. Replace shims if laminations are curled or damaged.

c. Repair mechanical and corrosion damage to retainer (2, figure 2-38A), static stops (9), radius rings (14), strap fittings (15), strap pins (16), pitch horns (39), blade latches (50), strap bolts (58), pillow blocks (28), and blade bolts (59). (Refer to figure 2-38M through 2-38Z.)

(1) Polish out acceptable damage using fine india stone on steel parts, and No. 400 to 600 grit abrasive cloth or paper (item 15) on aluminum parts.

(2) Apply brush cadmium plating solution (item 58) to all previous plated repaired surfaces. Do not cadmium plate threaded areas.

(3) Apply chemical film treatment (item 32) to all repaired and bare aluminum surfaces.

(4) Apply solid film lubricant (item 46) to areas that have the lubricant coating removed due to repairs or wear. (Refer to Section I) Clean area to be touched up with clean cheesecloth and MEK (item 17), or naptha (item 36). Wipe surfaces dry before solvent evaporates. Apply solid film lubricant with a brush in accordance with manufacturers instructions.

(5) Complete recoating of surfaces with solid film lubricant shall be accomplished by a firm, licensed to perform this repair in accord with the manufacturer of the solid film lubricant.

(6) Refinish parts in accordance with paragraph 2-46J as required.

d. Replace parts that are cracked, broken, distorted, or have mutilated threads.

e. Replace parts that exceed allowable wear or damage limits. (Refer to figure 2-38M through 2-38Z.)

f. Retainer, (2, figure 2-38A). Surface damage to retainer does not require repair, provided that function of seals is not impaired.

g. Yoke (12).

(1) Polish out minor scratches and damage on non-critical areas of yoke with crocus cloth (item 13). (Refer to figure 2-38N for repair limits.)

(2) Longitudinal scratches on spindle not in excess of 0.002 inch deep need not be completely removed. Surface burrs should be removed using crocus cloth (item 13). Clean up minor damage to threads.

CAUTION

Repairs to shot peened yoke are limited to local areas.

(3) Pillow block bore damage shall be removed by sanding in a circular motion, using 400 grit abrasive cloth or paper (item 15). Final polish surface until scratch free, using fine abrasive pads (item 9). Ensure all nicks, scratches, and tool marks are removed.

(4) Bearing and sleeve journals and the adjoining fillet radii damage shall be removed by sanding with 400 grit abrasive cloth or paper (item 15) and fine abrasive pads (item 9).

(5) Damage to other surfaces shall be removed by sanding using 400 grit abrasive cloth or paper (item 15) and fine abrasive pads (item 9). Ensure all nicks, scratches, tool marks, and corrosion pitting is removed. Touchup surfaces where plating has been damaged or where repairs were accomplished. (Refer to figure 2-38AA , Note 1, for surfaces that require cadmium plating (item 58) and to Section I.

(6) Mask areas of yoke that do not require prime or paint. (Refer to paragraph 2-46J)

(7) Apply primer (item 102) as required to areas indicated in paragraph 2-46J .

(8) Within eight hours of primer application, apply two coats of light gull gray acrylic lacquer (item 45) color No. 36440, to yoke center section. Refer to paragraph 2-46J for specific areas of prime and paint.

(9) After paint and primer has cured, check pillow block bores with a 2.6242 inch diameter inside micrometer. Sand, as required without penetrating primer, to provide gage acceptance. (Refer to paragraph 2-46J)

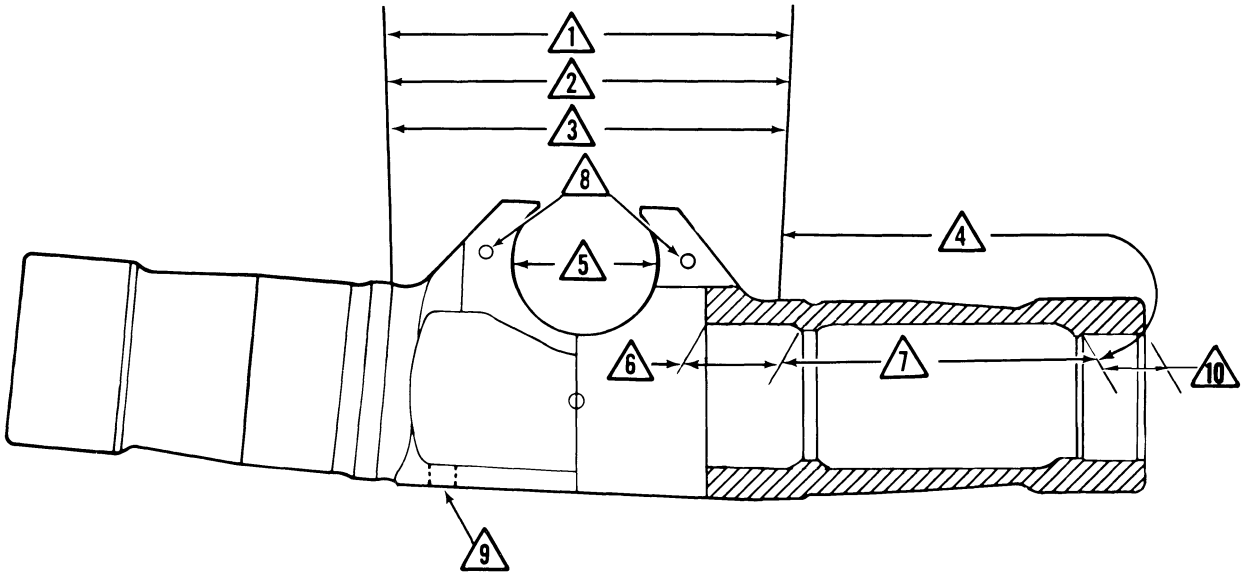

NOTES:

1. Brush cadmium plate (item 58) repaired areas.
2. Prime center section, except threads, with one coat of primer (item 102).
3. Paint center section, except as noted, with two coats of light gull gray acrylic lacquer (item 45).
4. Do not cadmium plate, prime or paint this area.
5. Do not paint. After prime has cured, pillow block bores shall accept a 2.6242 inch diameter gage.
6. Do not prime or paint this area.
7. Touchup repaired areas with primer (item 102).
8. Swab holes with primer (item 102).
9. Do not prime or paint threads.
10. Swab unprimed inside diameter with corrosion preventive compound (item 102).

206011-225-1

Figure 2-38AA. Main rotor hub — corrosion protection (Sheet 1 of 6)

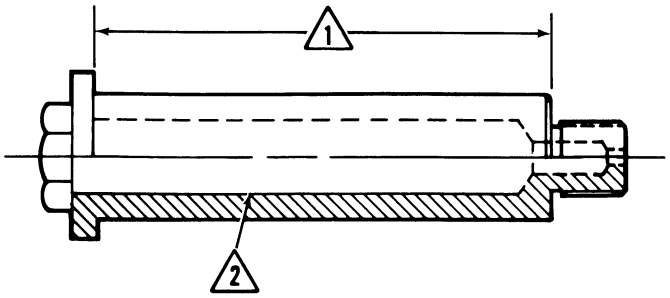

BLADE BOLT

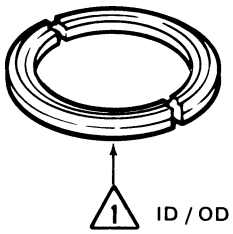

CONE SET

NOTES:

1. **Solid film lubricant (item 16 or item 46) coat 0.0002 to 0.0004 inch thick repaired and bare areas.**

2 **Apply corrosion preventive compound (item 24) to ID of bolt.**

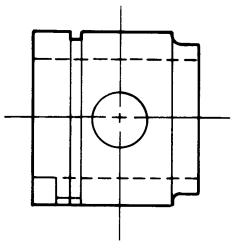

STRAP FITTING

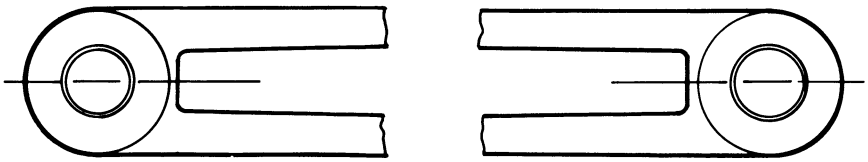

TENSION/TORSION STRAP

NOTE:

1. **Brush cadmium plate (item 58) repaired areas.**

206011-225-2

Figure 2-38AA. Main rotor hub — corrosion protection (Sheet 2 of 6)

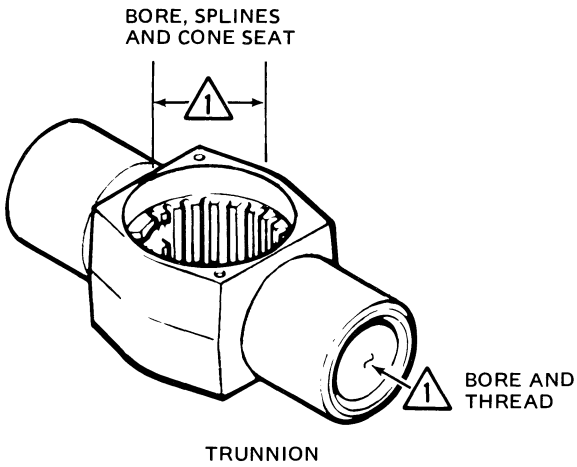

NOTES:

1. Do not brush cadmium plate, prime or paint.

2. Brush cadmium plate (item 58) all external repairs and bore areas, except Note 1 and thread holes.

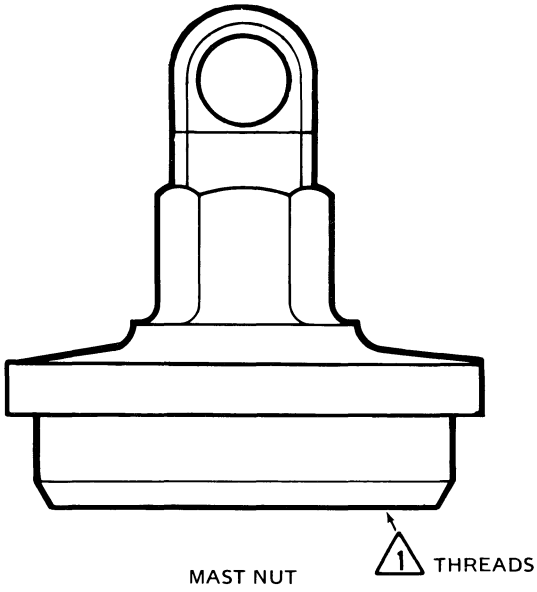

NOTES:

1. Do not prime or paint.

2. Bruch cadmium plate (item 58) repaired areas.

3. One coat of primer (item 102) and two coats of light gull gray acrylic lacquer (item 45), color 36440 on exterior surfaces, except Note 1.

206011-225-3

Figure 2-38AA. Main rotor hub — corrosion protection (Sheet 3 of 6)

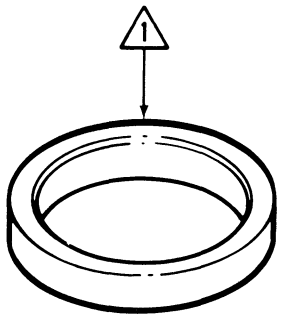

RADIUS RING

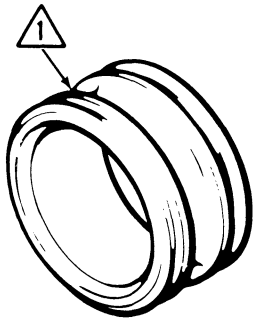

RETAINER

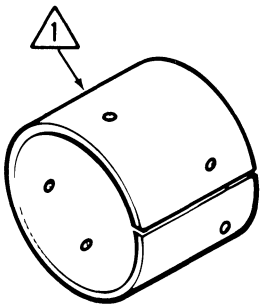

SPACER

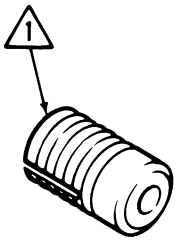

ADJUSTING SCREW

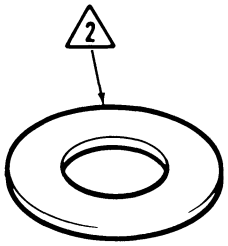

BLADE BOLT WASHER

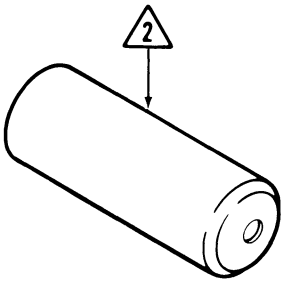

STRAP PIN

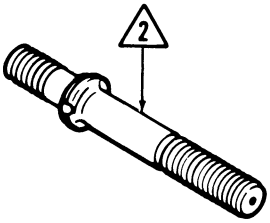

STRAP BOLT

NOTE:

1. Apply chemical film treatment (item 32) to repaired areas. Do not prime or paint.
2. Brush cadmium plate (item 58) repaired and bare areas.
3. One coat of primer (item 102) and two coats of light gull gray acrylic lacquer (item 45), color 36440, swab holes with primer.

206011-225-4

Figure 2-38AA. Main rotor hub — corrosion protection (Sheet 4 of 6)

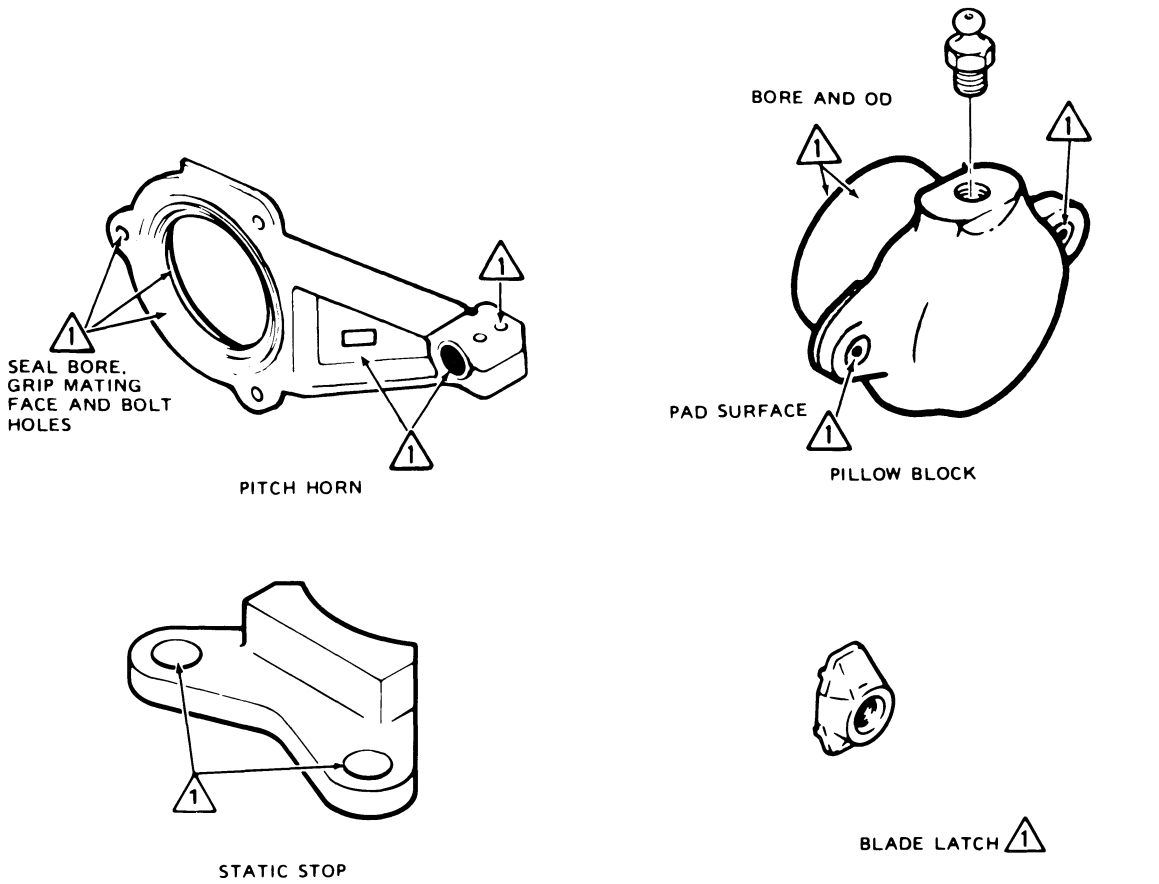

NOTES:

1. Do not prime or paint.

2. Base material chemical film treated.

3. One coat of primer (item 102) and two coats of light gull gray acrylic lacquer (item 45), color 36440, on all exterior surfaces except note 1.

206011-225-5

Figure 2-38AA. Main rotor hub — corrosion protection (Sheet 5 of 6)

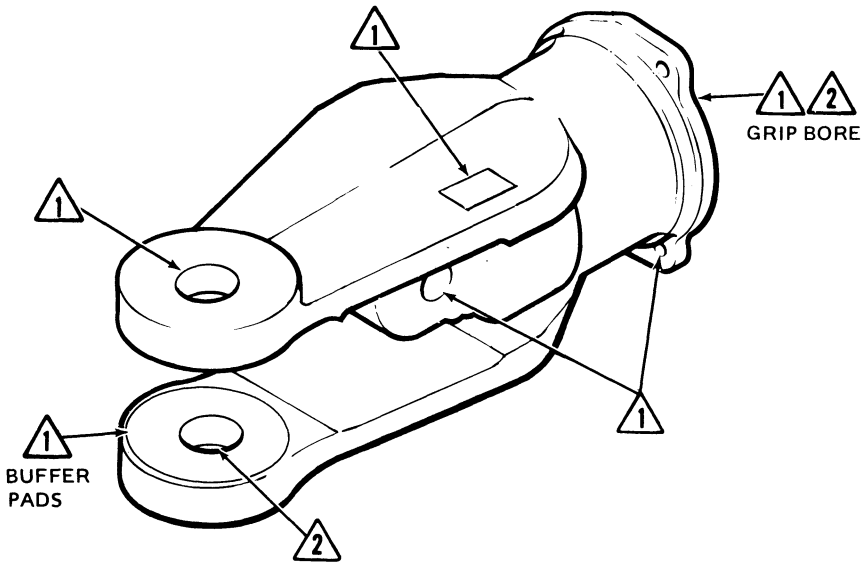

GRIP

NOTES:

1. Do not prime or paint.
2. Coat ID of grip with solid film lubricant (item 16 or item 46); minimum diameter after coating 3.9995 inches.
3. Bare material chemical film treated.
4. One coat of primer (item 102) and two coats of light gull gray acrylic lacquer (item 45) color 36440, on all exterior surfaces except Note 1.

206011-225-6

Figure 2-38AA. Main rotor hub — corrosion protection (Sheet 6 of 6)

h. Install wear sleeve (2, figure 2-38AD) on each spindle of yoke (3) as follows:

(1) Fabricate a wear sleeve installation work aid in accordance with figure 2-38AB .

(2) Clean yoke spindles and ID of wear sleeve with MEK (item 17) and wipe dry.

(3) Apply 0.25 inch bead of adhesive (item 7) to yoke spindle sleeve surfaces.

(4) Heat wear sleeve (2, figure 2-38AD) with a heat lamp until hot to touch. Using asbestos glove, position ID chamfered end of wear sleeve on end of yoke spindle (figure 2-38AC .) Ensure wear sleeve is perpendicular to yoke spindle.

(5) Support the yoke on a press and position the wear sleeve work aid over wear sleeve and yoke spindle. Press wear sleeve into yoke spindle until word aid bottoms out. Check wear sleeve for correct location. (Refer to figure 2-38AD). Clean OD of wear sleeve with cloths dampened with MEK (item 17). Ensure all adhesive is removed from wear sleeve OD. Apply a bead of adhesive (item 7) around inboard end of wear sleeve to flange height. Fair adhesive to form a fillet radius between inboard end of wear sleeve and yoke, with no edge voids permitted.

(6) Repeat steps (2) through (5) on opposite side of yoke.

i. Install buffer pads (1, figure 2-38AE) and closures (7) on grips (2), as follows:

Note

Prior to bonding apply chemical film treatment (item 32) and primer (item 102) to grip tangs, faying with buffer pads.

(1) Abrade buffer pads (1) and closures (7) in areas to be bonded with 180 grit abrasive cloth (item 15) and wipe clean with a cloth moistened with naphtha (item 36). Wipe dry with a clean cloth. Clean mating surfaces on grips (16, figure 2-38AF) and yoke (1) with naphtha (item 36) and wipe dry.

Note

Protect parts with wrapping paper (item 138) if bonding cannot be accomplished immediately.

(2) Buffer pads (1, figure 2-38AE).

(a) Mix adhesive (item 121) per manufacturer's instructions using 100 parts A to 22.4 parts B. As soon as possible after mixing adhesive apply to each faying surface, extending appproximately 1/16 inch past edge diameters of buffer pads.

(b) Press parts together firmly ensuring buffer pads are aligned with bushings in grips for blade bolts. Remove excess adhesive with cloths dampened with MEK (item 17). Apply bond line pressure over the full bond region throughout the cure cycle. Cure for 24 hours at 70° to 80°F (21° to 27°C) or for 60 minutes at 180° to 200°F (82° to 93°C). Fair and smooth squeeze-out around buffer pads. During cure cycle check for edge voids and fill as necessary.

(3) Closures (7).

(a) Apply a thin even coat of adhesive (item 7) to mating surfaces of closures and grips. Allow adhesive to dry to a tacky stage (evidenced by its adhering but not transferring to the finger when touched).

(b) Press parts together firmly. Ensure that closures are firmly seated to grips. Fair adhesive squeeze-out and cure at 70° to 80°F (21° to 27°C) for four hours minimum. No edge voids are permitted.

j. Apply primer (item 4 or item 102) and light gull gray acrylic lacquer (item 45) color No. 36440, removed from parts during inspection and repair. (Refer to paragraph 2-46J).

k. Nuts (48 and 53, figure 2-38A).

(1) Clean up minor damage to outer surface.

(2) Replace if cracked, damaged or corroded.

l. Bond strap pin caps (17) to strap fitting pin with adhesive (item 7).

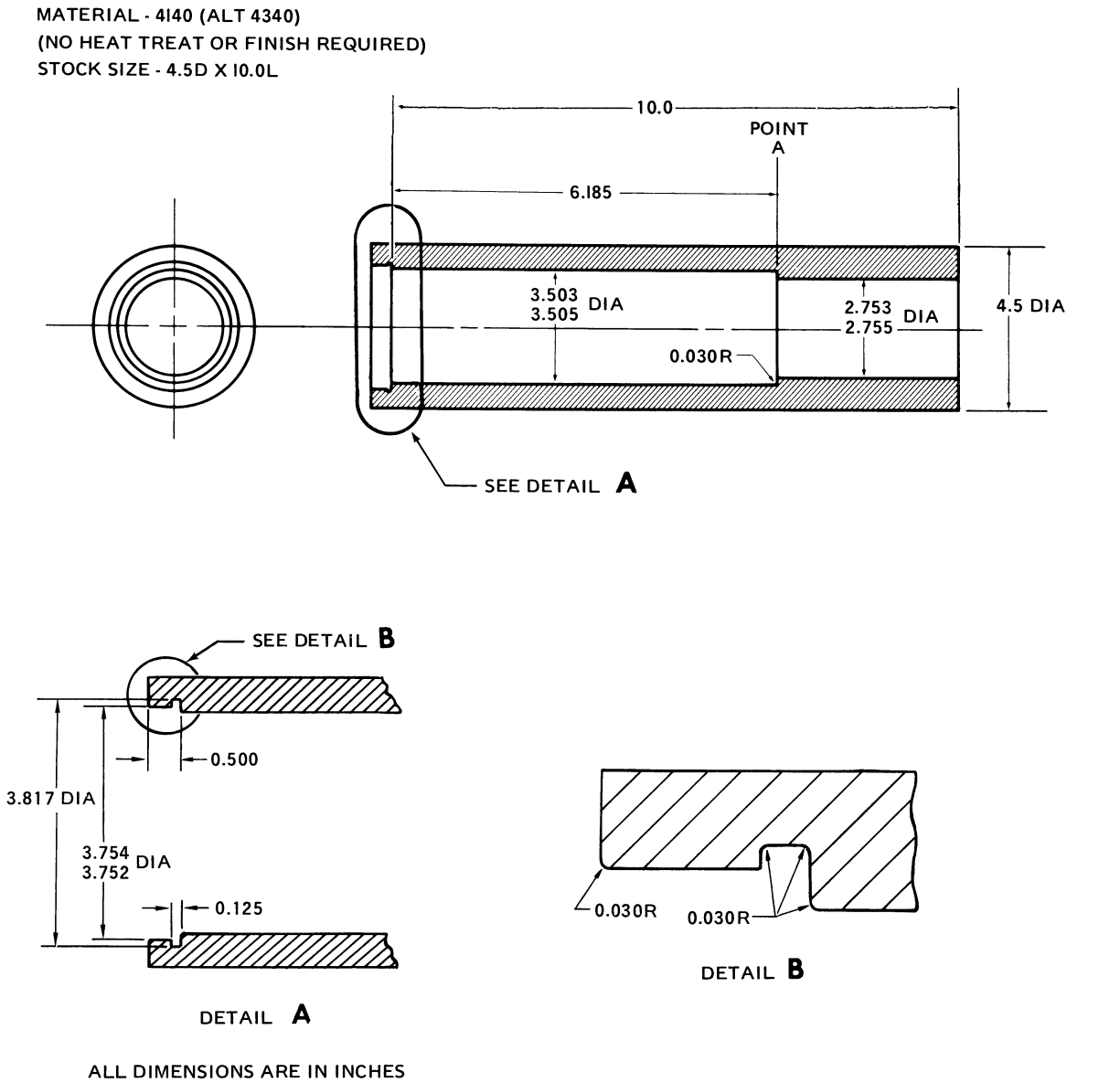

Figure 2-38AB. Wear sleeve installation work aid

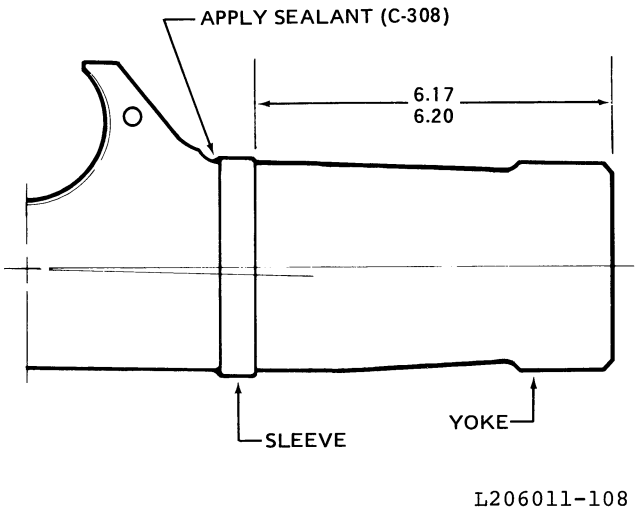

Figure 2-38AC. Yoke wear sleeve installation

m. Grip repair.

(1) Vapor degrease grip using trichloroethylene (item 118) at 188° to 193°F (87° to 89°C) and use abrasive pads (item 9). After cleaning apply a film of water to surface and check for water break free surface. If a flashout occurs within 25 seconds after flow of water stops, repeat cleaning and testing.

(2) Polish out nicks, dents, and corrosion on outer surface of grip (46) using 400 to 600 grit abrasive cloth (item 15). (Refer to figure 2-38J for repair areas and limits.) Treat repairs with brush chemical film (item 32).

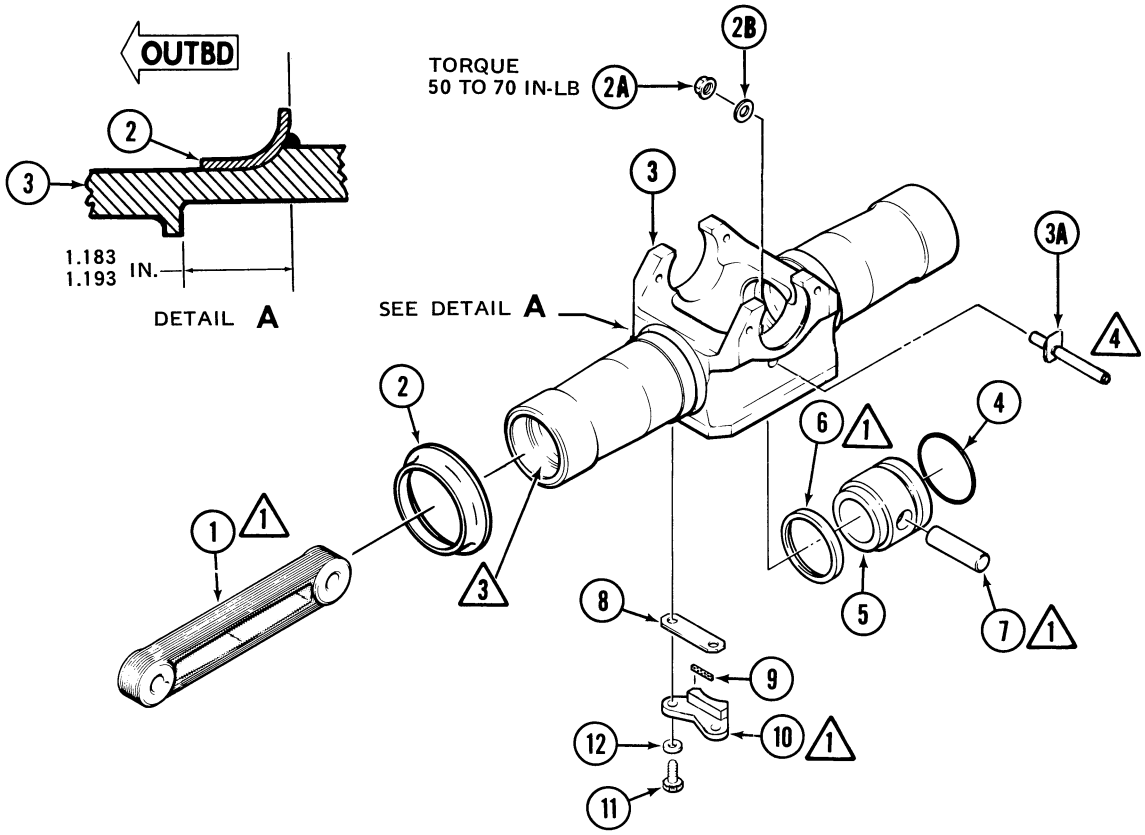

1. Tension-torsion strap
2. Wear sleeve
2A. Nut
2B. Washer
3. Yoke
3A. Retainer
4. Packing
5. Strap fitting
6. Radius ring
7. Strap pin
8. Laminated shim
9. Rubber stop
10. Static stop
11. Bolt
12. Steel washer

Figure 2-38AD. Yoke and strap (Sheet 1 of 2)

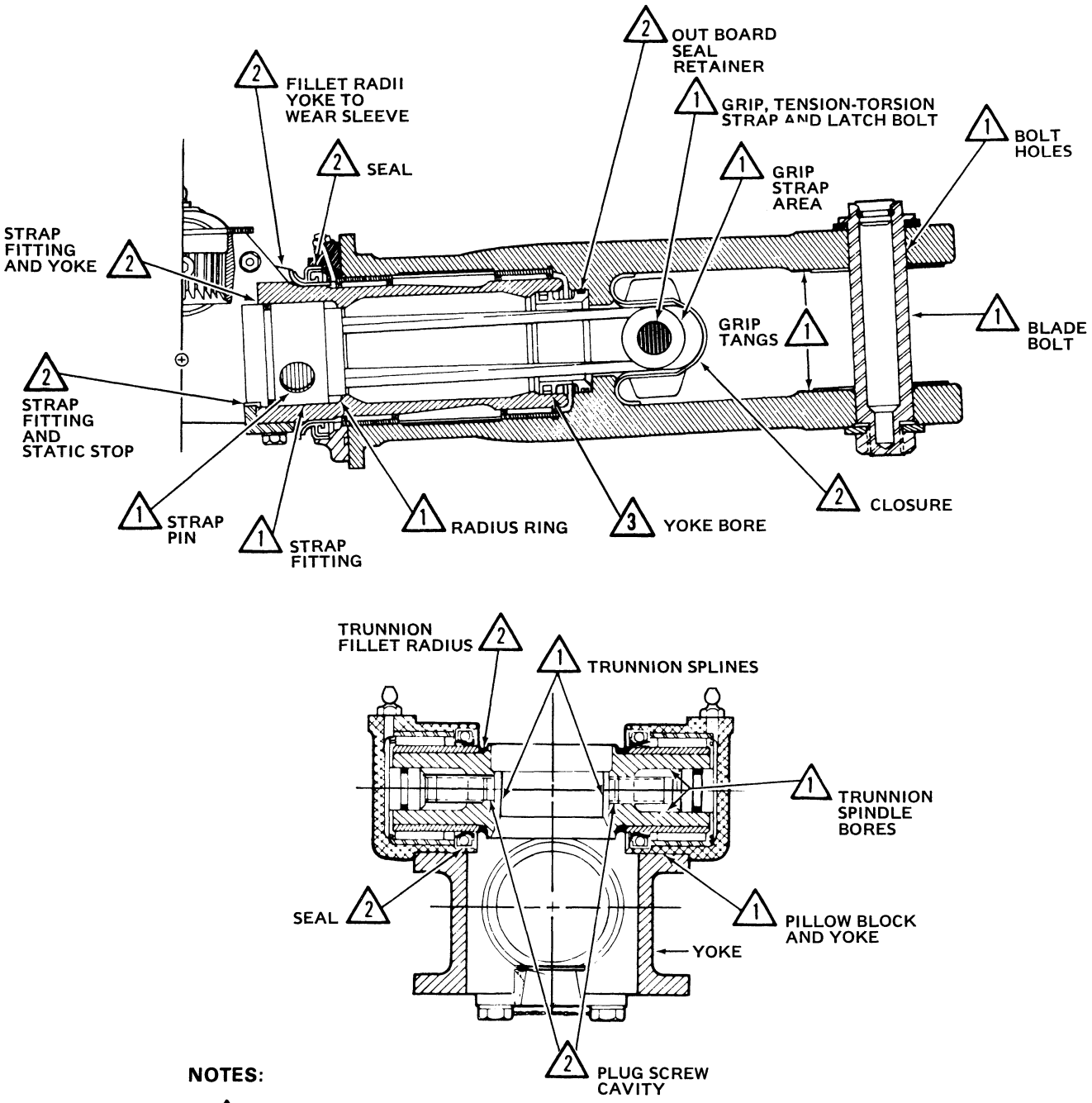

NOTES:

1. Use corrosion preventive compound (item 24) on all faying surfaces.
2. Apply sealing compound (item 7).
3. Apply corrosion preventive compound (item 24A).
4. Installation typical for left side. Right side opposite except as noted.

206011-226

Figure 2-38AD. Yoke and strap (Sheet 2 of 2)

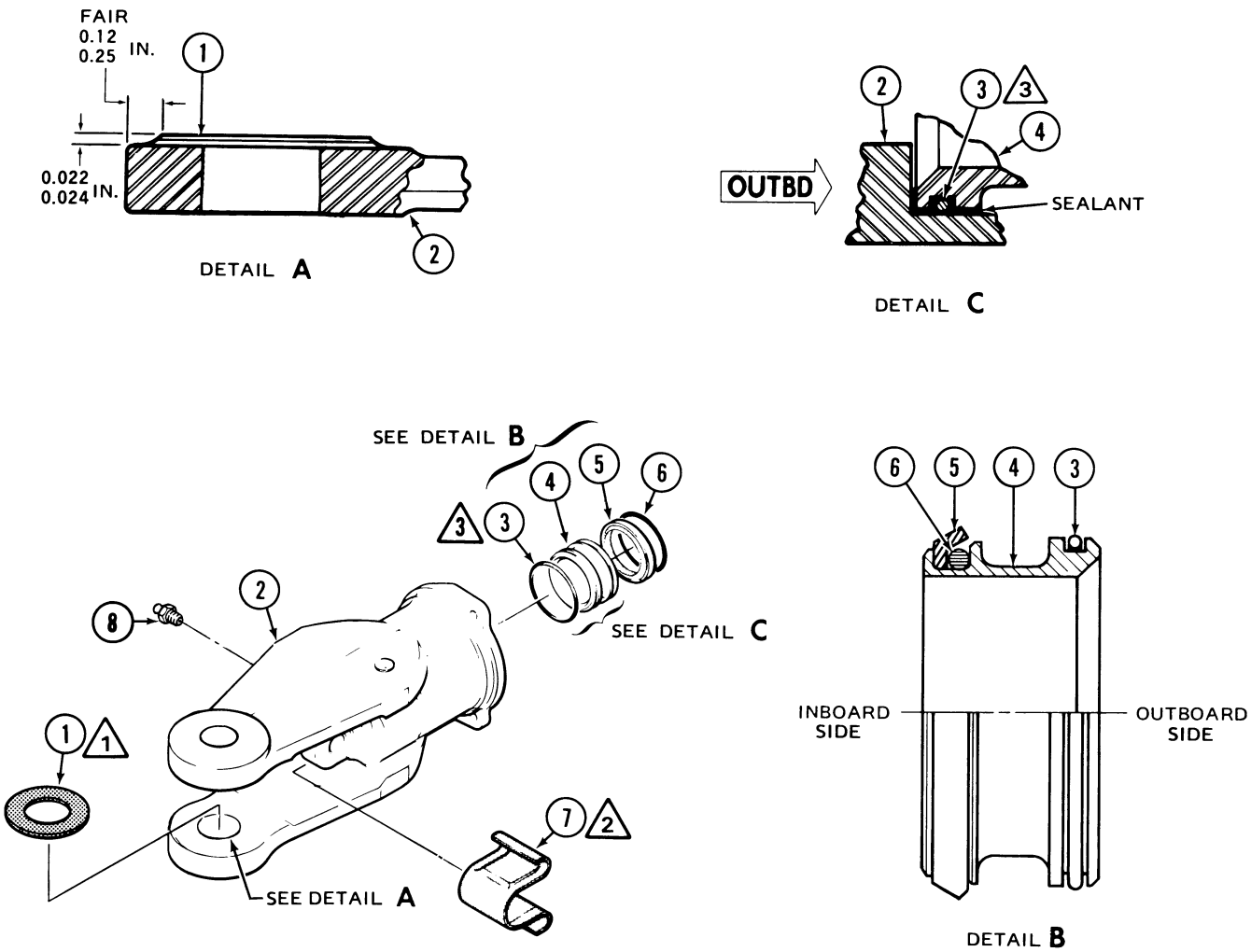

1. Buffer Pad
2. Grip
3. Packing
4. Retainer
5. Excluder
6. Packing
7. Closure
8. Lubrication Fitting

NOTES:
1. Bond buffer pads to grips using adhesive (item 121).
2. Bond closures to grips using sealant (item 7).
3. Coat outboard end of retainer groove packing and mating surface of grip bore with sealant (item 7).

206011-227

Figure 2-38AE. Grip and retainer assembly

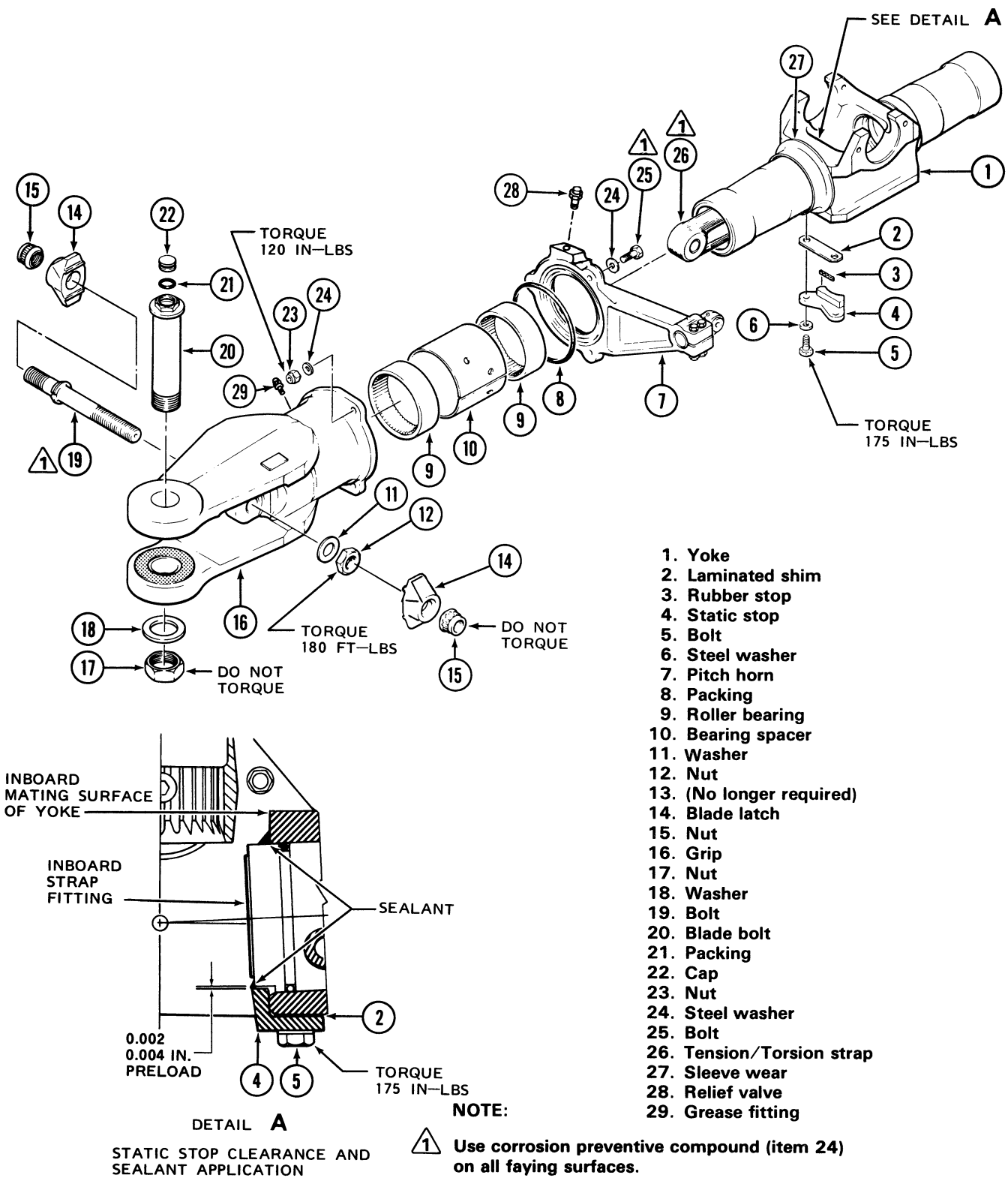

Figure 2-38AF. Main rotor hub assembly

(3) Clean and coat all external surfaces of grip with one coat of primer (item 102) and two coats of lacquer (item 45). Omit paint from all holes, bores, bushings, flanges, and name plate.

(a) Apply brush coat of chemical film (item 32) to surface. Rinse grip with clean water and dry with cheesecloth or tack rag.

(b) Apply primer (item 102) to surface. Primer shall be overcoated in not less than 1.0 hour and not more than 8.0 hours. If primer was applied at elevated temperatures, apply overcoat in not less than 30 minutes and not more than 3 hours.

(c) Apply lacquer (item 45) within time limits of step (3). Apply a second coat of lacquer after a minimum of 30 minutes drying time.

Note

Lacquer surfaces not overcoated within one hour require wiping with a tack rag prior to application of next coat.

(d) Cure by air drying for one hour, and then bake at 160°F for one hour. Alternate cure is air dry at room temperature for 4 to 6 hours.

n. Trunnion repair.

(1) Polish out repairable nicks and scratches on surface of trunnion (20, figure 2-38A) with crocus cloth (item 13). (Do not exceed limits of figure 2-38P)

(2) Coat repaired areas with brush cadmium plating (item 7).

(3) Polish out repairable nicks, burrs and scratches on splines with fine india stone.

(4) Replace trunnion if cracked, damaged or if corrosion limits of figure 2-38P are exceeded.

(5) Apply corrosion preventive compound (item 24) to trunnion spindle inside diameter.

o. Replace bearing inner race (25, figure 2-38A) if distressed or damaged. Replace bearing inner race (25) and trunnion (20) if damaged due to race turning on spindle.

p. Repair pillow block (28).

(1) Polish out repairable nicks and scratches in pillow block with crocus cloth (item 13). (Refer to figure 2-38Z)

(2) Coat repaired areas with chemical film (item 32).

(3) Replace pillow block if damaged, cracked, or corroded beyond limits of figure 2-38A .

q. Replace pillow blocks pads (29, figure 2-38A .) if loose, scored, corroded or worn. Replace pads as follows:

(1) Remove pads and abrade pillow blocks (28) lightly with 400 grit abrasive cloth or paper (item 15). Remove sanding residue with clean cloths dampened with MEK (item 17).

(2) Apply adhesive (item 121) to faying surfaces of pillow block (28) and pad. Position pad on pillow block, using care to align bolt holes and edges.

(3) Remove excess adhesive with a cloth dampened with MEK (item 17). Apply firm contact pressure to pad and cure adhesive for 72 hours at 70° to 90°F (21° to 32°C) (handling strength in 24 hours), or for 60 minutes at 175° to 185°F (79° to 85°C).

r. Visually inspect bushings (30), thrust washers (22), and adjusting screws (21) for damage that would render parts unserviceable.

s. Replace bearing (26) if spalled, discolored due to overheating, roller is broken or is rough in operation.

t. Replace any part with defects for which no damage limits are established.

2-46H. REASSEMBLY — MAIN ROTOR HUB (206-011-100-127, -137, and -145)

Note

The following procedure is for one side only. Opposite side is identical and should be assembled at same time.

Lubricate all seals and packings with approved lubricant. (Refer to Section I.)

a. Assemble yoke (3, figure 2-38AD) with tension-torsion strap (1), wear sleeve (2), strap fitting (5), strap pin (7), and static stop (10) as follows:

(1) Clean new wear sleeve (2) and spindles of yoke (3) with clean cloths dampened with MEK (item 17). Wipe surfaces dry before solvent evaporates.

(2) Heat wear sleeve (2) until hot to touch. Using asbestos glove, position wear sleeve on yoke (3) to a dimension of 1.183 to 1.193 inches as shown in figure 2-38AD , detail A.

(3) During hub reassembly, apply corrosion preventive compound (item 24), refer to figure 2-38AD for location of corrosion preventive compound (item 24), to the following parts as indicated:

(a) Yoke (3) surfaces in contact with strap fittings, radius rings, and pillow blocks.

(b) Strap (1), apply to spool bores and faces.

(c) Strap fitting (5), surfaces in contact with strap pin radius ring, and strap assembly.

(d) Strap pin (7), radius rings, latch bolts and blade bolts shanks.

(e) Grips (2, figure 2-38AE), surfaces in contact with latch bolts and nuts, blade bolts, and straps.

(f) Pitch horns (7, figure 2-38AG), surfaces in contact with pitch change link trunnion assembly, grip and attachments.

(g) Pillow blocks (11, figure 2-38AH), surfaces in contact with yoke.

(h) Trunnion (4), splines and inside diameter of spindles.

(i) Prior to installation of main rotor blades coat grip tangs with chemical film treatment (item 32) and primer (item 102), faying with buffer pads.

Note

Do not allow corrosion preventive compound (item 24) to contact inboard flanged surface of fittings in area to be sealed. (Refer to figure 2-38AF .)

(4) During hub reassembly, apply corrosion preventive compound (item 102) to unprimed outboard and unprimed inside diameter of spindles of yoke (3, figure 2-38D).

(5) During hub reassembly, apply sealing compound (item 7) to the following parts as indicated:

Note

Thoroughly clean surfaces to receive sealing compound (item 7) with clean cloths dampened with MEK (item 17). Wipe surfaces dry with a clean cloth before solvent evaporates.

(a) Strap fittings (5) around part to seal yoke, no edge voids.

(b) Closures (7, figure 2-38AE), seal to grips, no edge voids.

(c) Pitch horn (7, figure 2-38AH) outside diameter of seal, prior to installation.

(d) Outboard seal on retainers (4, figure 2-38AE) and seal to grip.

(e) Pillow blocks (11, figure 2-38AH) outside diamter of seals, prior to installation.

(f) Trunnion (4) fill area (360 degrees) between fillet radii on trunnion and bearing inner race. Fair in sealant to contour. No edge voids permitted, remove excess.

(g) Center and preload trunnion and apply anaerobic primer (item 85) and retaining compound (item 83) to adjusting screws. Fill cavities for screws with sealing compound (item 7).

(6) Insert tension-torsion strap (1, figure 2-38AD) into bore of yoke (3) extending into inboard cutout of yoke. Position radius ring (6) and packing (4) on strap fitting (5). Mate the strap fitting with

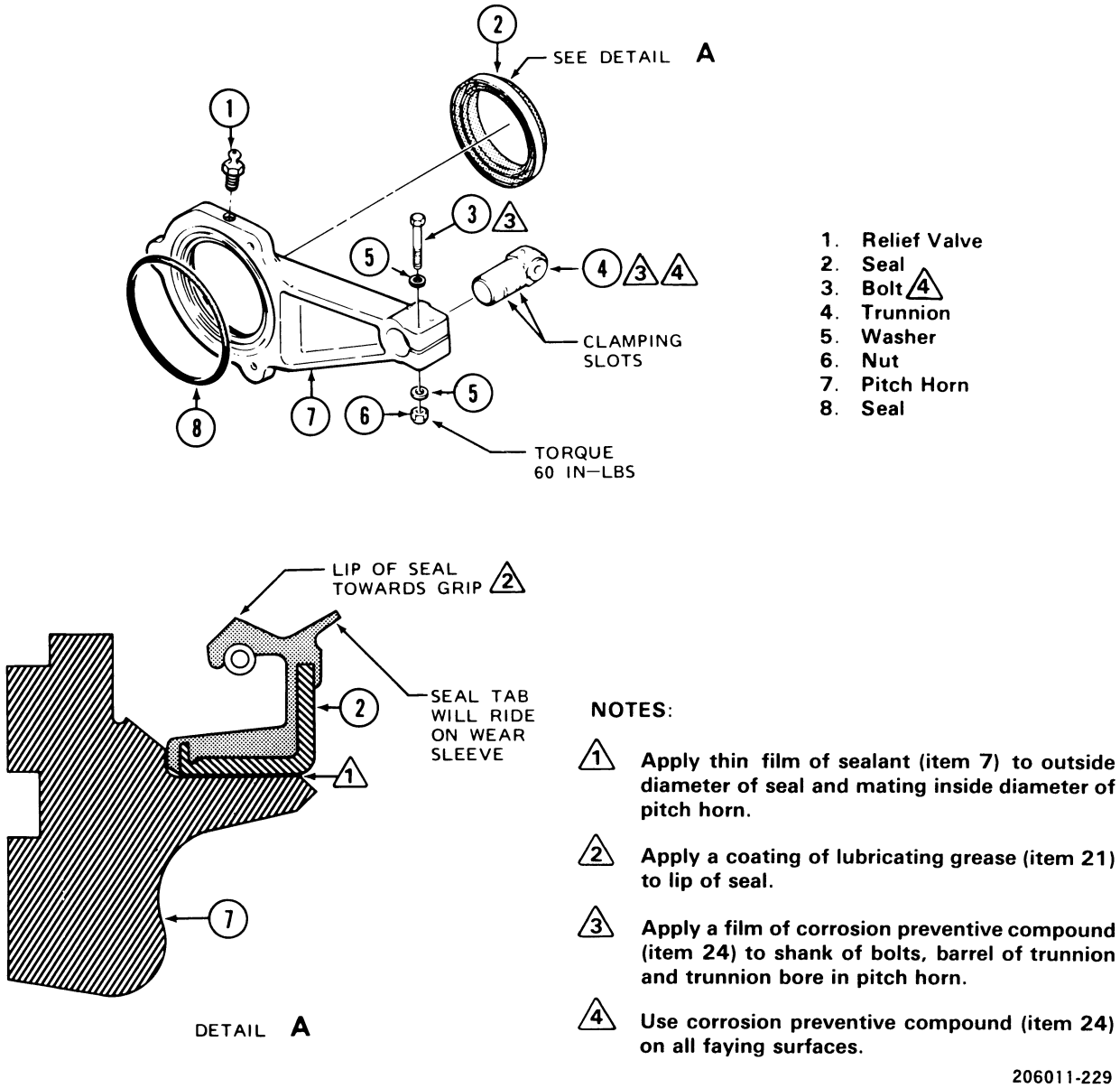

Figure 2-38AG. Pitch horn

tension-torsion strap (1) and install strap pin (7). Pull strap outboard in yoke to seat radius ring (6) in yoke (3). Rotate the strap until flat on fitting is parallel to lower surface of yoke (3).

(7) Insert rubber stop (9) with full laminated shim (8) and static stop (10) to strap fitting (5) and yoke (3). Install bolts (11) with steel washers (12) and torque 175 inch-pounds. Measure gap between cutout in strap fitting (5) and static stop (10), then adjust shim thickness, as required, to obtain 0.000 to 0.004 inch pinch fit between static stop (10) and strap fitting (5). Reinstall parts and tighten bolts snug. Centering of static stop and torquing of bolts will be accomplished after main rotor trunnion centering. (Refer to step k.) Repeat procedures for opposite side of yoke.

(8) Support yoke (3) on wooden blocks to prevent possible damage to wear sleeves (2).

b. Assemble grips (2, figure 2-38AE) with buffer pads (1), closures (7), and retainers (4) as follows:

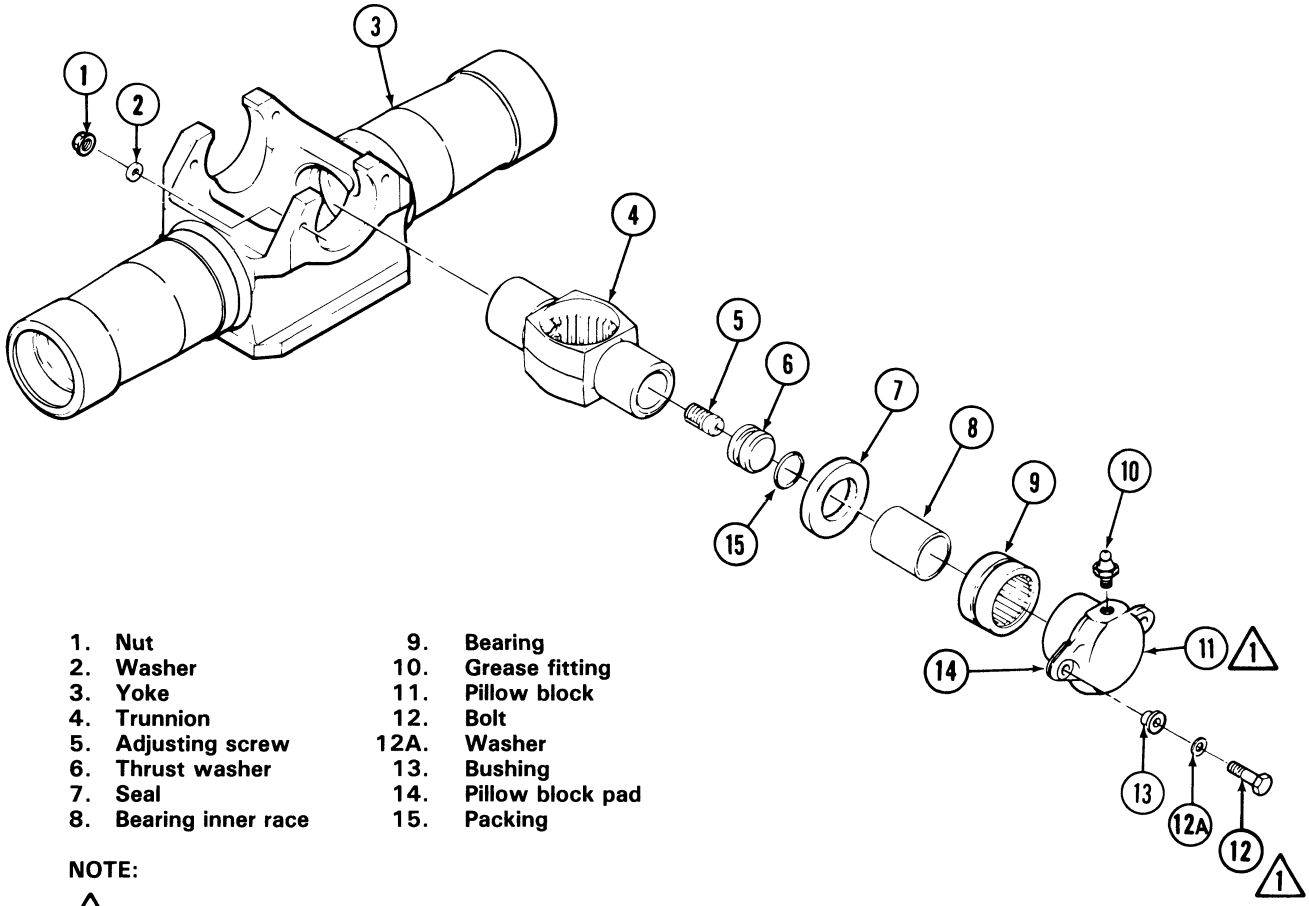

1. Nut
2. Washer
3. Yoke
4. Trunnion
5. Adjusting screw
6. Thrust washer
7. Seal
8. Bearing inner race
9. Bearing
10. Grease fitting
11. Pillow block
12. Bolt
12A. Washer
13. Bushing
14. Pillow block pad
15. Packing

NOTE:

1 Use corrosion preventive compound (item 24) on all faying surfaces.

206011-230

Figure 2-38AH. Trunnion assembly

(1) Lightly abrade surfaces to be bonded on buffer pad (1) and closure (7) with 400 grit abrasive cloth or paper (item 15). Clean surfaces of pads, closures, and mating surfaces of grips with clean cloths dampened with MEK (item 17) or naphtha (item 36).

(a) Degrease grips (2).

(b) Apply chemical film treatment (item 32) to grips (2).

(c) Prime grips (2) with one coat of primer (item 102).

(d) Mix adhesive (item 121) in a clean container using 100 parts A base resin to 23 parts B hardener. Pot life 40 to 45 minutes at a temperature of 70° to 95°F.

(e) Apply a flim of mixed adhesive to buffer pad (1) and to tangs of grip (2). Center buffer pad to bore of grip bushings (8, figure 2-38AE , detail A) within 0.03 inch. Fair adhesive from edge of bore to pad and from pad to edge of grip to approximately 0.12 to 0.25 inch.

CAUTION

During adhesive and sealant curing do not heat grips above 200°F (93°C). Damage to packings and excluder will occur.

(f) Apply 10 psi bond line pressure over to buffer pad (1) to maintain 0.022 to 0.024 inch thickness requirement. Cure for 2 hours at temperature of 145° to 155°F (63° to 68°C). During cure cycle check for edge voids. Fill and fair as necessary.

(2) Apply a thin even coat of sealant (item 7) to mating surfaces of closure (7) and grip (2). Allow sealant to dry to a tacky stage, evidenced by its adhering but not transferring to the fingers when touched. Press parts together firmly. Ensure that closure (7) is firmly seated to grip (2). Fair sealant and air-cure for 72 hours (15 hours minimum tackfree time). No edge voids are permitted.

(3) Assemble and install packings (3 and 6, detail B), retainer (4) and excluder (5) into grips (2) as follows:

(a) Clean outboard groove in retainer (4) and mating surface area in bore of grip (2) with a sharp plastic scraper and clean cloths dampened with MEK (item 17).

(b) Fabricate main rotor hub excluder mandrel. (Refer to figure 2-38AJ .)

(c) Insert small end of excluder mandrel into inboard end of retainer (4, figure 2-38AE, detail B). Position new excluder (5) on mandrel with lip pointing outboard. Slide excluder onto retainer and into groove.

(d) Apply a coating of sealant (item 7) to outboard groove in retainer (4) and install new packing (3) in groove. Recoat packing with sealant (item 7) then apply a film of sealant (item 7) to mating surfaces in end of bore inside grip (2). (Refer to detail C.)

(e) Install retainer (4) in grip (2), ensuring retainer is installed with packing (3) end first, and that retainers are firmly seated in end of bore inside grips. (Refer to detail C.)

CAUTION

During sealant cure do not heat grips above 200°F (93°C). Damage to packings and excluder will occur.

(f) Cure sealant for 72 hours at 70° to 80°F (21° to 27°C); or for one hour at 70° to 80°F (21° to 27°C) plus 2 hours at 175° to 200°F (79° to 93°C).

c. Assemble grip (16, figure 2-38AF) with roller bearings (9) and bearing spacer (10) as follows:

Note

If new roller bearings (9) are being installed, they must be thoroughly cleaned in solvent (item 12) to remove corrosion preventive compound.

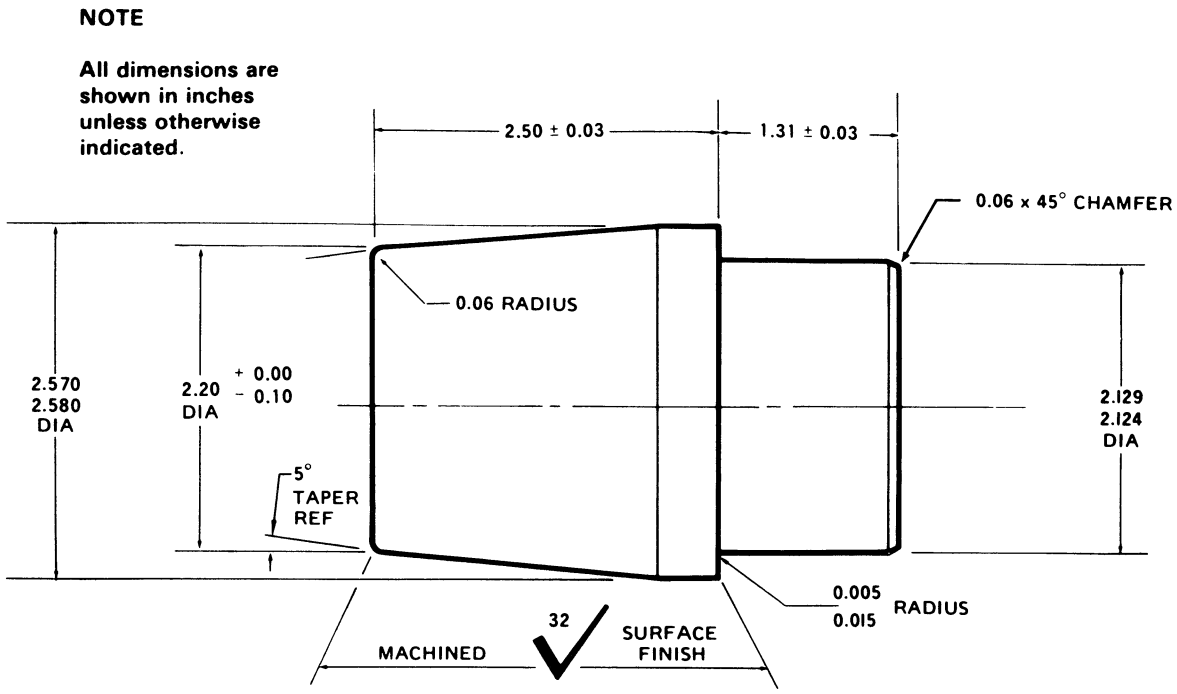

Figure 2-38AJ. Main rotor hub excluder mandrel

CAUTION

During bearing installation, do not heat grip above 200°F (93°C). Damage to packing and excluder may occur.

(1) Coat roller bearings (9) and bearing spacer (10) with approved lubricating oil.

(a) Apply heat lamp to bearing area. Carefully insert outer roller bearing (9) into grip (16) until fully seated.

(b) Position bearing spacer (10) into grip (16) and install inner roller bearing (9).

d. Assemble pitch horn (7, figure 2-38AG) and pitch horn trunnion (4) as follows:

(1) Install new seal (2) in pitch horn (7) with lip of seal outboard and seal tab inboard. (Refer to detail A.)

(a) Clean outside diameter of new seal (2) and mating inside diameter of pitch horn (7) with clean cloths dampened with MEK (item 17).

(b) Apply a thin film of sealant (item 7) to outside diameter of seal (2) and mating inside diameter of pitch horn (7). Press seal into pitch horn with lip of seal outboard.

(c) Apply a coating of grease (item 21) to lip of seal (2).

(2) Install pitch horn trunnion (4) into arm of pitch horn (7).

(a) Apply a film of corrosion preventive compound (item 24) to shank of bolts (3), barrel of pitch horn trunnion (4), and to mating clamping surface in arm of pitch horn (7).

(b) Use fabricated pitch horn trunnion work aid (refer to figure 2-38B and 2-38C to spread pitch horn (7, figure 2-38AG), insert pitch horn

trunnion (4) with clamp slots aligned with bolt holes.

(c) Install one steel washer (5) on each bolt (3) and insert into pitch horn (7). Install additional steel washer (5) with nut (6). Torque nuts uniformly to 60 inch-pounds, plus tare.

(d) Install relief valve (1) on pitch horn (7).

(3) Carefully install pitch horn (7) on yoke journal with seal (2) on wear sleeve (27, figure 2-38AF) as shown on figure 2-38AE .

e. Position yoke (1, figure 2-38AF) on workbench. Assemble pitch horn (7) and grip (16) onto yoke (1) as follows:

Note

Four bolts may be installed in static stop bolt holes to support main rotor hub above work table.

(1) Apply a film of grease (item 21) to outside diameter of wear sleeve (27), bearing journals on spindle of yoke (1), lip of seal in pitch horn (7) and to packing (8). Also apply a film of lubricant to excluder.

(2) Position pitch horn (7) onto spindle of yoke (1). Carefully guide seal in pitch horn (7) onto wear sleeve (27). Ensure packing (8) is still in groove on grip face of pitch horn.

(3) Clean the following parts with naphtha (item 36) and dry thoroughly with clean cloths. Faying surfaces of yoke (12, figure 2-38A), strap pins (16), radius rings (14), strap fittings (15), and inside diameters of holes in each end of tension-torsion straps (64).

(4) Apply corrosion preventive compound (item 24) to faying surfaces of yoke (12), strap pins (16) radius rings (14), strap fittings (15), rectangular holes, strap pin holes and outside diameter of fitting bores and faces. Do not allow corrosion preventive compound to contact inboard flanged surface of fittings in area to be sealed. (Refer to figure 2-38AG). Also, apply corrosion preventive compound (item 24) to pin and bolt bores in tension-torsion straps (64, figure 2-38A). Apply corrosion preventive compound (item 102) to bores of yoke.

(5) Position tension-torsion straps (64) in journal ends of yoke (12) with small hole in strap inboard. Install radius rings (14) on strap fittings (15) and install strap pins (16) through strap fittings and tension-torsion straps. Pull tension-torsion straps (64) outboard in yoke (12) to seat strap fittings (15).

(6) Apply a bead of sealant (item 7) around exposed inboard flanged end of strap fittings (15) and mating surface of yoke (12). (Refer to figure 2-38AG). Fully seat strap fittings (15, figure 2-38A) in yoke (12) by pulling outboard on tension-torsion straps (64), check that clearance between strap fittings and yoke is filled with sealant and that strap fitting is aligned for installation of static stop (9).

Note

Remove bolts from static stop bolt holes, if installed.

If new roller bearings (9, figure 2-38AF) are being installed, they must be thoroughly cleaned in solvent (item 12) to remove corrosion preventive compound, then coat with grease (item 21).

(7) Coat roller bearings (9) and bearing spacer (10) with grease (item 21).

(a) Carefully position one roller bearing (9) onto spindle of yoke (1) until fully seated against groove in pitch horn (7). Install roller bearings with part number face outboard.

(b) Position bearing spacer (10) onto spindle of yoke (1) and install outboard roller bearing (9) with part number face outboard.

(8) Fit grip (16) over spindle of yoke (1) and carefully rotate grip until engaging tension-torsion strap (26). Continue rotating and pressing grip onto spindle of yoke until bolt hole for strap bolt (19) is open.

(9) Apply a film of corrosion preventive compound (item 24), to the following parts and complete assembly of grip (16) as follows:

CAUTION

Do not allow main rotor grip or yoke to rotate on pitch change axis. If grips or yoke are allowed to rotate on the pitch change axis beyond 90 degrees, the main rotor grip retention strap/s must be replaced.

(a) Apply a film of corrosion preventive compound (item 24) on shank of bolt (19), grip (16) and bore of tension-torsion strap (26). Insert strap bolt through grip (16) and tension-torsion strap (26) from trailing edge side, engaging notch in flange of bolt (19) with pin in grip (16).

(b) Wipe excess corrosion preventive compound from exposed threads of bolt (19). Install washer (11) and nut (12) on bolt (19).

(c) Press pitch horn (7) and grip (16) together ensuring packing (8) is in groove, and holes for bolts (25) are aligned. Dip bolts (25) and steel washers (24) in primer (item 102) and install through pitch horn and grip with boltheads inboard. Install washers (24) and nuts (23), torque nuts uniformaly to 120 inch-pounds, plus tare.

(d) Use T101554 socket wrench and torque nut (12) to 180 foot-pounds.

(e) Install blade latches (14), and nuts (15) on each end of strap bolts (19). Tighten nuts only enough to remove free-play from blade latches. Nuts shall be torqued only after main rotor blades are installed.

(f) Coat shank of blade bolts (20) and blade bolt washer (18) with corrosion preventive compound (item 24) and install in grip (16) with nut (17). Tighten nut only enough to remove free-play from blade bolt. Nut shall be torqued only after main rotor blades are installed.

(g) Apply a film of grease (item 21) to new packing (21) and position on cap (22). Firmly press cap into blade bolt (20).

(10) Install opposite grip in the same manner.

f. Assemble and install main rotor trunnion (4, figure 2-38AH) to yoke (3) as follows:

(1) Thermal fit bearing inner races (8) to trunnion (4) as follows:

(a) Clean trunnion (4) and bearing inner race (8) with clean cloths dampened with MEK (item 17).

(b) Apply a film of grease (item 21) to surfaces of trunnion (4) and bearing inner race (8) prior to exposure to temperature differentials.

WARNING

Wear asbestos gloves when handling heated parts.

(c) Heat bearing inner races (8) to a temperature of 200° to 275°F (93° to 135°C).

CAUTION

Inner race is thermal fitted to trunnion. Do not attempt to install inner race without heating. If inner race is allowed to cool before pressing operations are completed, damage to trunnion or inner race may occur.

(d) Install bearing inner races (8) on trunnion (4). Install inner races flush with end of trunnion spindle. Allow parts to return to room temperature.

Note

Fabricated pressing plate may be used to aid in pressing inner race on spindle of trunnion. (Refer to figure 2-38B for fabrication of trunnion bearing inner race pressing plate work aid.)

(e) Clean radius groove on spindle of trunnion (4, figure 2-38AH) with clean cloths dampened with MEK (item 17), fine abrasive pad (item 9), and plastic scraper. Wipe surface dry before solvent evaporates. Apply a bead of sealant (item 7) to the end of bearing inner race (8, figure 2-38AH) to blend with body of the trunnion (Refer to figure 2-38AK .) Allow sealant to air-cure for 72 hours at 70° to 80°F (21° to 27°C).

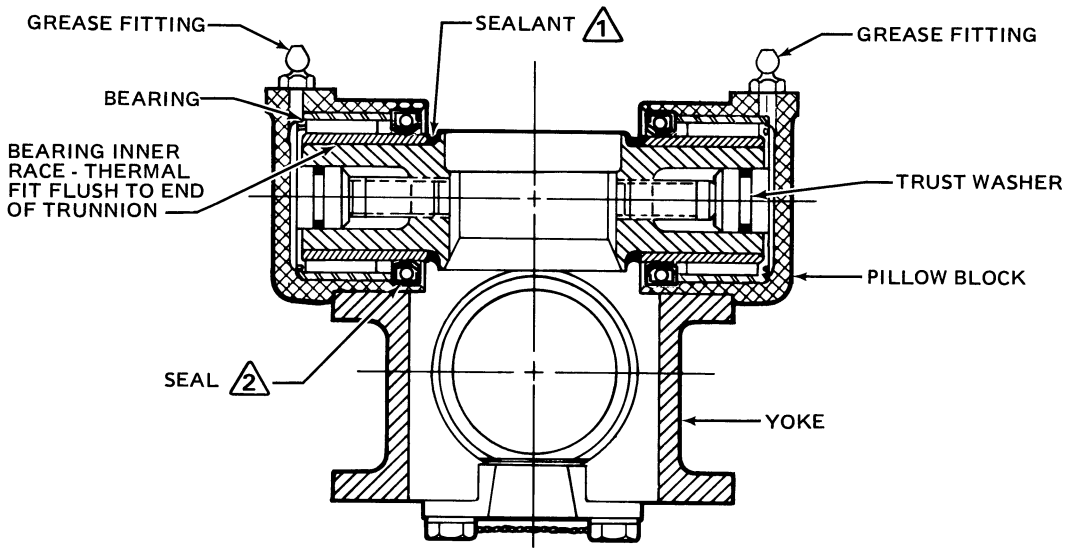

NOTES:

1. Apply bead of sealant to fill radius groove, both ends.
2. Apply thin film of sealant to outside diameter of new seals and inside diameter of pillow blocks.

L206011-158A

Figure 2-38AK. Trunnion requirements

(2) Clean adjusting screw (5) and threads in spindles of trunnion (4) with cloths dampened with MEK (item 17). Thread adjusting screw (5) into trunnion (4) halfway using 1/4 inch hex wrench.

(3) Apply coating of grease (item 21) to new packing (15), surfaces of thrust washer (6), and inside diameter of journals in trunnion (4). Push thrust washers into journals of trunnion (4).

(4) Assemble pillow block (11) as follows:

(a) Thoroughly clean bearings (9) in solvent (item 12) and dry with filtered compressed air. After bearings are clean and dry, coat with grease (item 21).

(b) Check pillow block (11) for smooth surface in area that fays with thrust washer (6).

(c) Apply heat lamp to pillow block (11). When pillow block is heated, press bearings (9) with part numbers exposed, into pillow block until seated.

(d) Clean outside diameter of new seal (7) and mating inside diameter of pillow block (9) with cloths dampened with MEK (item 17). Wipe dry with clean cloths before solvent evaporates.

(e) Apply a thin film of sealant (item 7) to outside diameter of new seal (7) and to mating surface in pillow block. Press seal into pillow block with lip pointing outboard toward mast. (Refer to figure 2-38AK)

(f) Apply coating of grease (item 21) to lip of seal (7, figure 2-38AH) and to outside diameter of bearing inner races (8) on spindles of trunnion (4) and pillow block face which fays with thrust plug.

g. Apply a film of corrosion preventive compound (item 24) to outside diameter of pillow block (4) that will contact yoke (3), and to shank of bolts (12) and bushings (13).

h. Position trunnion (4) in yoke (3) and install pillow blocks (11) on each spindle of trunnion.

Exercise care to avoid damaging seals (7) during installation over bearing inner races (8). Install bushings (13), washers (12A), and bolts (12) MS21250-04018 through each pillow block. Install two steel washers (2) under nuts (1) MS21042L4 or EB048 and secure pillow blocks. Torque nuts (1) MS21042L4 100 inch-pounds or EB048 nuts 150 inch-pounds.

i. Paint 1/8 inch wide slippage marks across heads of bolts (12) to flange on pillow blocks (11) and from nuts (1) to flange on yoke (3).

j. Center trunnion (4) on pitch change axis within 0.003 inch as follows:

(1) Centering trunnion (without grips).

(a) Position yoke on a surface plate with bearing journals supported by vee blocks. (Refer to figure 2-38AL) Insert trunnion centering dowel work aid into trunnion. Dowel must be a line-to-line fit in trunnion with no more than 0.001 inch clearance. If dowel is a loose fit it is either undersize or splines of trunnion are worn. (Refer to figure 2-38AM for fabrication of main rotor trunnion centering dowel.)

(b) Level yoke and trunnion centering dowel. With the use of vernier height gage, measure and record the distance between the top surface of the trunnion centering dowel and top surface of yoke inboard bearing journal. This is dimension A on figure 2-38AL . Measure and record the distance between the lower surface of the trunnion centering dowel and lower surface of yoke inboard bearing journal. This is dimension B. Dimensions A and B must be equal within 0.003 inch.

(c) Reposition trunnion, as necessary, with adjusting screw. Use 1/4 inch hex wrench to obtain equal readings at dimensions A and B within 0.003 inch. (Refer to figure 2-38AL .) Recheck trunnion centering after each adjustment. Torque each adjusting screw 115 to 130 inch-pounds plus tare torque of self-locking element. Trunnion rotational pre-load shall not exceed 50 inch-pounds.

Note

If pre-load exceeds 50 inch-pounds, thrust washers were not hand lubricated on assembly or faying surfaces were too rough. Purging will not help. Rebuild trunnion.

(2) Centering trunnion (with grips installed).

(a) Position yoke with support blocks on a surface plate and insert trunnion centering dowel work aid into trunnion. (Refer to figure 2-38AN .) Dowel must be a line-to-line fit in trunnion with no more than 0.001 inch clearance.

Note

If dowel is loose fit, it is either undersized or splines of trunnion are worn. (Refer to figure 2-38AM for fabrication of main rotor trunnion centering dowel.)

(b) With the use of an inside micrometer or vernier caliper, measure and record the distance between the surface of the trunnion centering dowel and inside adjacent machine surface of the pillow block housing. Measure and record the distance between the opposite surface of the trunnion centering dowel as dimension A. Also, measure and record the distance between the trunnion centering dowel and the inside machine surface of the opposite pillow block housing as dimension B. Dimensions A and B must be equal within 0.003 inch. (Refer to figure 2-38AN .)

(c) Reposition trunnion, as necessary, with adjusting screws. Use 1/4 inch hex wrench to obtain equal reading at dimensions A and B within 0.003 inch. Torque each adjusting screw 115 to 130 inch-pounds plus tare torque of self-locking element. (Refer to figure 2-38AN .) Recheck trunnion centering after each adjustment. Trunnion rotational preload to be 50 inch pounds maximum.

k. After trunnion (4, figure 2-38AK) is adjusted set adjusting screws (5) as follows:

CAUTION

Do not move adjusting screws.

(1) Clean heads of adjusting screws (5) and threads in journal of trunnion (4) by wiping surfaces with a cloth dampened with solvent (item 135).

(2) Apply a wet film of primer (item 85) with a cotton swab to heads of adjusting screws (5) and

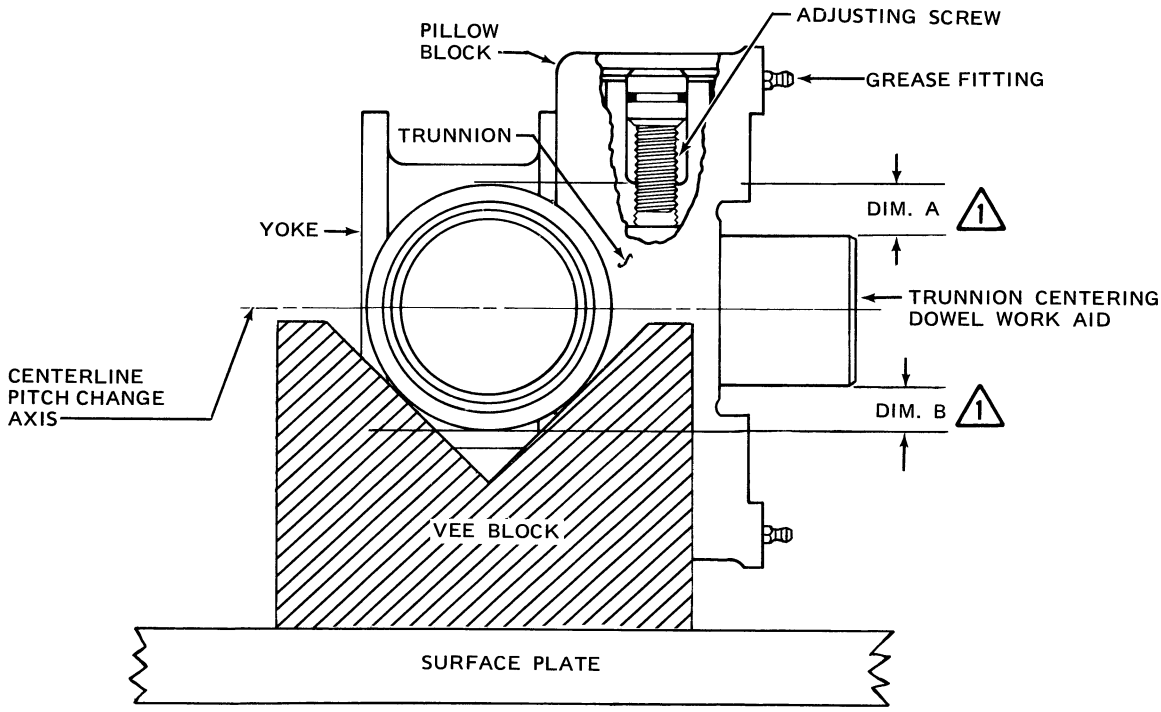

Notes:

1 Dimensions A and B must equal within 0.003 inch with yoke and trunnion centering dowel level.

L206011-63A

Figure 2-38AL. Trunnion centering without grips installed

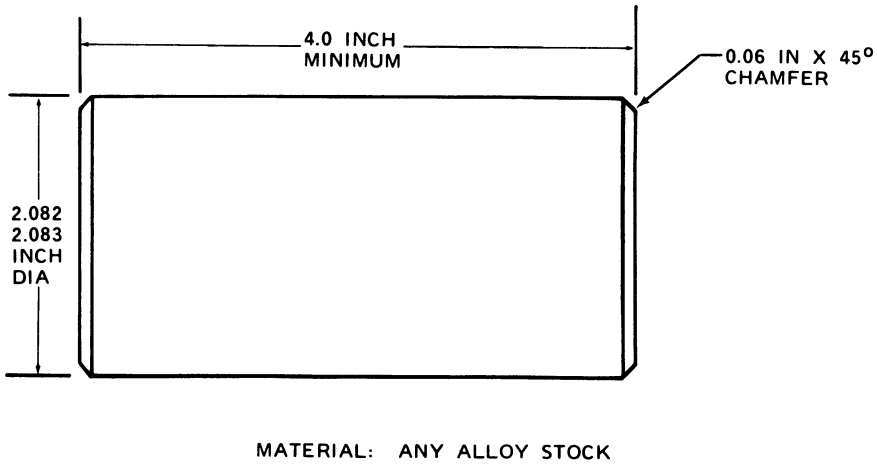

206011-116B

Figure 2-38AM. Trunnion centering dowel work aid

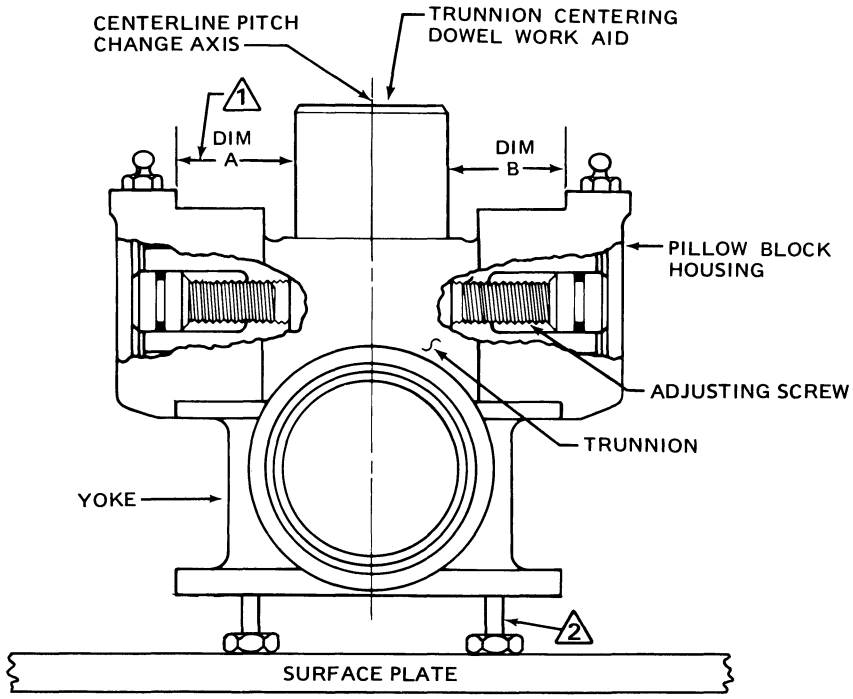

NOTES:

1. Dimensions A and B must equal within 0.003 inch or less.
2. Equal length bolts (3/8-24) in static stop attach holes.

206011-115A

Figure 2-38AN. Trunnion centering with grips installed

threads in journal of trunnion (4). Allow a 2 to 3 minute flash off of primer prior to sealant application.

(3) Apply a small bead of sealant (item 38) to heads of adjusting screws (5) and thread area in journal of trunnion (4). The sealant will be drawn into thread area by capillary action, sealing screws in place. Complete sealing of screws is assured when a purple ring of sealant remains around screw heads. Allow sealant to cure at 70° to 80°F (21° to 27°C) for 60 to 90 minutes.

l. Apply a coating of corrosion preventive compound (item 24) to heads of adjusting screws (5), threaded journal, and to all spline teeth of trunnion (4).

m. Center contact radius of static stop (4, figure 2-38AF) on centerline with splines in trunnion within 0.005 inch as follows:

(1) Loosen bolts (5) at static stop (4) and yoke (1). Insert a main rotor mast into main rotor trunnion and tilt to one extreme position.

(2) Hold static stop (4) in firm contact against yoke (1) and mast. Torque bolts (5) 175 inch-pounds. Ensure that a 0.000 to 0.004 inch pinch fit remains between static stop and inboard strap fitting. (Refer to detail A.) If preload is not correct adjust laminated shim (2), as required.

(3) Secure heads of bolts (5) together with lockwire (item 19). Repeat procedure for opposite side.

(4) After both static stops (4) are adjusted and secured, clean top and side surfaces of static stop, inboard surface of yoke and exposed surface of inboard strap fittings with clean cloths dampened with MEK (item 17).

(5) Apply a bead of sealant (item 7) to exposed surface of inboard strap fitting, yoke (1), and to top and sides of static stops (4). (Refer to detail A.)

n. Lubricate main rotor hub as follows:

(1) Purge lubricate grip cavities with grease (item 21) at grease fitting (29) until grease flows through relief valve (28).

(2) Purge lubricate pillow blocks with grease (item 21) at grease fitting (10, figure 2-38AH) until grease flows past seal (7).

o. Secure pitch horns (7, figure 2-38AF) to yoke by lockwire or work aid pins.

p. Install retainer (3A, figure 2-38AD) on yoke (3) and secure with washer (2B) and nut (2A). Torque nut (2A) 50 to 70 inch-pounds.

q. Install overhaul data plate and serial number data plate to main rotor hub yoke with adhesive (item 121) if not prevoiusly accomplished. Stamp overhaul information on data plate prior to bonding to yoke. Apply firm contact pressure to plates and cure for 72 hours at 70° to 90°F (21° to 32°C) (handling strength - 24 hours), or for 60 minutes at 175° to 185°F (79° to 85°C).

r. Paint main rotor hub. (Refer to paragraph 2-46J and table 2-5C.)

s. Clean and spray coat entire main rotor hub with corrosion preventive oil (WD-40).

Note

Delay coating until paint cures.

t. After initial ground run and tracking, service grips and pillow blocks to ensure cavities are completely filled. Repeat lubrication after first flight. (Refer to Section I)

2-46J. PAINTING — MAIN ROTOR HUB.

Note

Refer to Section I , for chemical film treatment and application of protective paint finishes.

a. Touch up all exposed bare aluminum surfaces with chemical film treatment (item 32).

b. Touch up all steel parts that were previously cadmium plated with brush cadmium plating solution (item 58).

c. Mask areas of main rotor hub, not requiring painting, with masking tape (item 69). (Refer to figure 2-38AP).

d. Prime main rotor hub with one coat of primer (item 102) in accordance with table 2-5C.

e. Paint main rotor hub with two coats of gloss acrylic lacquer (item 45) in accordance with table 2-5C.

2-46K. PRESERVATION — MAIN ROTOR HUB.

a. Lubricate main rotor hub with grease (item 21) at fittings (29) until purged past relief valve (28, figure 2-38AF).

b. Apply a coating of corrosion preventive compound (item 24) to all bare metal, uncoated, and unpainted surfaces (blade bolts, bushings, splines, etc.).

c. Enclose main rotor hub in wrapping paper (item 138) and seal with masking tape (item 69).

4. Securely pack main rotor hub in a metal or wooden shipping container with cushioning and hardware to prevent movement during handling or transit. Install 80 units of dessicant and seal container.

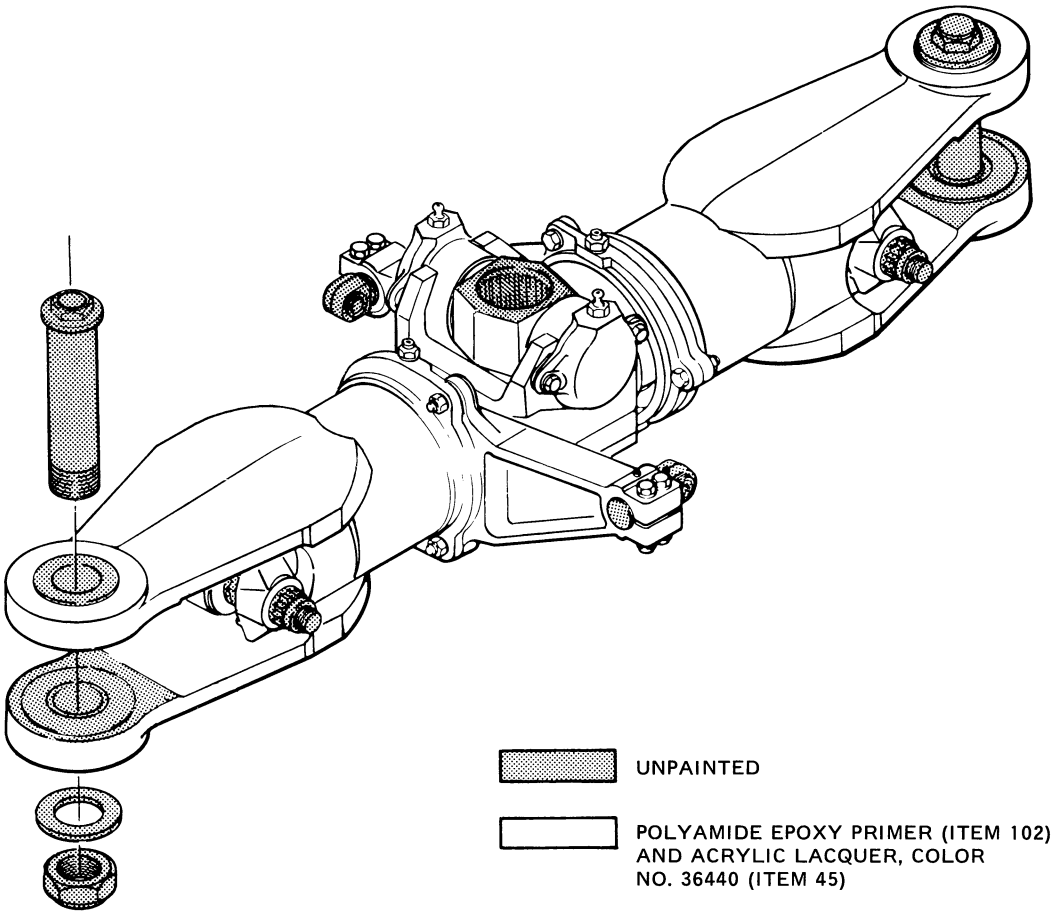

Figure 2-38AP. Main rotor hub painting

2-5C. Main rotor hub painting requirements

ITEM NAME	PAINT AND PRIMER TYPE	METHOD OF APPLICATION	NO. OF COATS	NOTE
Yoke	Primer, Polyamide Epoxy (item 102)	Spray	1	Paint yoke center section inboard of spindle wear sleeves. Omit finish on splindles, threaded holes, data plates, trunnion bearing bores, and retaining ring bore inboard end of spindle. Prime spindle ID, omit primer on retainer and seal bore.
	Acrylic Lacquer, Color No. 36440 (item 45)	Spray	2	
Pitch Horn	Primer (same as yoke)	Spray	1	Omit finish on trunnion bore, bolt holes, data plates, reservoir, and sight glass contact areas, seal bore, yoke and spindle bore, and oil supply hole.
	Acrylic Lacquer (same as yoke)	Spray	2	
Grip	Primer (same as yoke)	Spray	1	Omit finish on grip to pitch horn mating surface, wear pads of grip tang that mate with blade, blade bolt holes, bearing bore, inboard faces of tangs that mate with retention strap, and strap bolt holes.
	Acrylic Lacquer (same as yoke)	Spray	2	

Part 3
Rework - Main Rotor Blade Assembly

Note

Screen records to ensure main rotor blade has not reached retirement hours. (Refer to Section I, MANDATORY RETIREMENT SCHEDULE.)

Note

Limits Charts, listing critical dimensions of parts, are provided as a convenience in determining closeness of fit between mating parts. They also provide replacement dimensions as a guide for replacement of worn parts. It is not intended that all dimensions listed on Limits Charts are to be checked out as a prescribed rework procedure. Parts that give evidence of wear or physical damage will be checked dimensionally.

Note

For consumable materials item numbers, refer to Section I, CONSUMABLE MATERIALS, Table 1-1.

2-47. MAIN ROTOR BLADE ASSEMBLY (206-010-200) – REWORK.

2-48. DESCRIPTION. The main rotor blades are of all metal construction with an aluminum alloy honeycomb core, aluminum skins, spar and trailing edge strip. All of the structural components are joined by means of metal to metal bonding.

2-49. MAIN ROTOR BLADE INSPECTION.

Note

Any damage in excess of that noted in paragraphs 2-50 through 2-52 is reason to remove the blade. (See figure 2-39 and 2-40.)

2-50. INSPECTION – NICKS, SCRATCHES AND DENTS.

a. Nicks and scratches anywhere on the surface of the skin or trailing edge strip, that are not in excess of 0.008 inch in depth, are acceptable if they are polished out.

b. Nicks and notches in the extreme trailing edge of the blade, that are 0.120 inch deep or less, must be polished out over a distance of at least 2 inches each side of the nick or notch. In the area outboard of the trim tab, a depth of 0.25 inch may be polished out over a distance of 4.0 inches minimum on each side.

Note

If a nick or scratch in the skins, in excess of 0.008 inch deep, can be polished smooth without leaving the skin in the polished area so thin that it can be dented with fingernail pressure, then a patch may be applied over the area without cutting a hole.

c. Nicks and scratches in the skins, in excess of 0.008 inch deep, must be patched if it falls within the area and limits, as stated in paragraph 2-57.

d. In the outboard three feet of the blade, any dent in the skin that does not tear the skin, produce a void beyond allowable limits or affect flight characteristics, is acceptable.

e. Dents in the skin inboard of a station three feet from the tip of the blade, that are not in excess of 0.060 inch deep, are acceptable. Dents in excess of this value must be polished smooth and patched, as stated in paragraph 2-57.

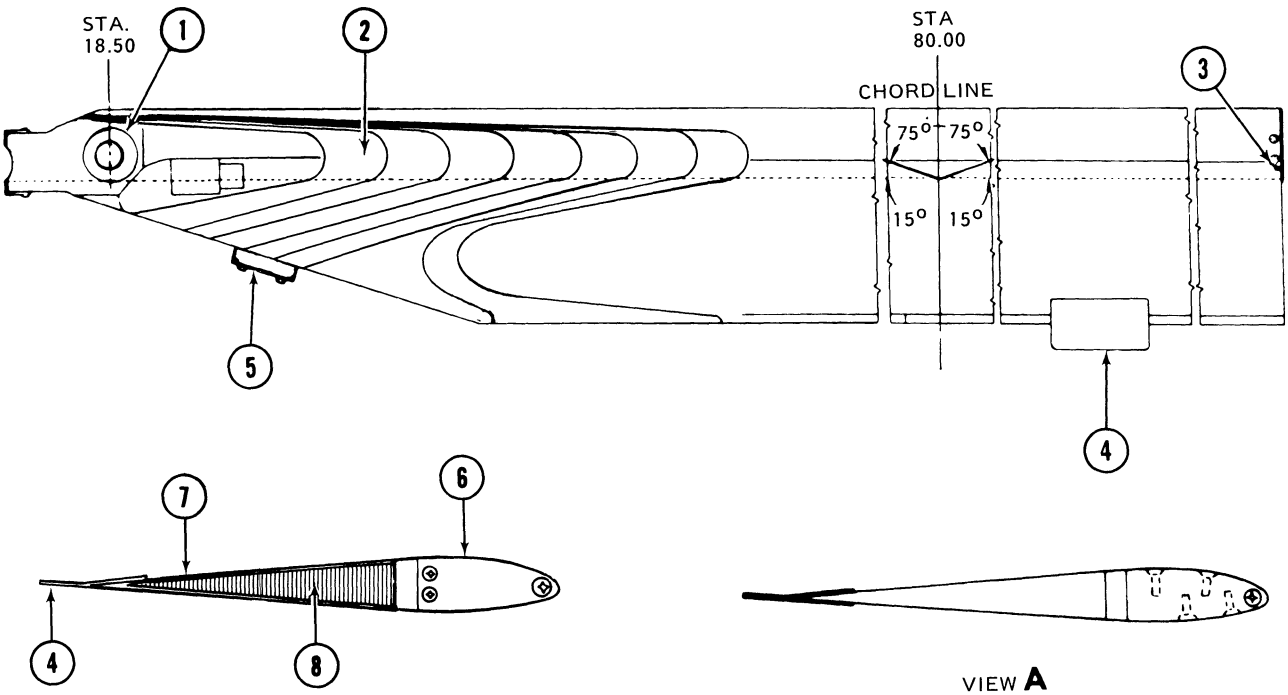

1. Grip Plate
2. Doublers
3. Spanwise Alignment Reference Point
4. Trim Tab
5. Balance Weight
6. Spar
7. Skin
8. Core

206019-8A

Figure 2-39. Main Rotor Blade – Rework Inspection

Note

Polish out all acceptable nicks and scratches using No. 180 grit or finer grit sandpaper (item 90). Polish to a surface finish of 63 RMS or better, remove only enough material to remove the nick or scratch.

f. If a nick or scratch exists in a sharp dent in the skin, the total depth of both must not exceed 0.060 inch. If the nick or scratch cannot be polished out, it must be cut out and patched, as stated in paragraph 2-57.

g. Nicks or scratches in the doublers or grip plates, that are not greater than 0.012 inch in depth, are acceptable if they are polished out.

2-51. INSPECTION — VOIDS.

Note

A void shall be defined as an unbonded area that is supposed to be bonded. Many sub-definitions of voids are often given, such as lack of adhesive, gas pocket, misfit, etc. These instructions shall make no distinction among these, but shall group them in the one general term "Void". All dimensions are in inches.

All acceptable voids in this paragraph must be sealed with the following:

Adhesive-EC-2216 (item 10), or Epoxy Adhesive-EA934 (item 31) or Epoxy Adhesive-A6 with Activator A (item 51).

a. Voids at the Butt End of the Blade.

(1) **A void between the trailing edge extrusion and skin not deeper than 1.0 inch nor wider than 0.25 inch is acceptable.**

(2) A void between the skin and trailing edge closure not deeper than 0.15 inch and wider than 1.0 inch is acceptable.

b. Voids in the Retention Area Inboard of Station 60.

(1) Edge voids 0.06 inch maximum depth, of any one bondline, shall not exceed 10 percent in total length of the bondline. Single edge voids, of 0.06 inch maximum depth and 2.0 inches maximum length, are acceptable on doublers and grip plates. Edge voids are not acceptable in the outboard 5.0 inches of each finger of the doublers and the outboard 3.0 inches of the grip plates unless repaired in accordance with paragraph 2-56A.

(2) Voids between the skin and core, not wider chordwise than 0.75 inch, not longer spanwise than 3.0 inches are permissible. The total area of all voids shall not exceed 5.0 square inches.

(3) Edge voids between the edge of the skin and the trailing edge extrusion or spar that are less than 0.06 inch wide by any length, or less than 0.12 inch wide by 7 inches long, are acceptable.

(4) Voids running into the main retention bolt hole, in any bondline, are not acceptable.

(5) Other voids between the skin and the trailing edge extrusion or spar which do not exceed 0.18 inch in width by 10.0 inches long, are acceptable.

c. Voids Under the Skin Outboard of Station 60.

(1) **Voids between the skin and the trailing edge extrusion shall not exceed 1/3 the width of the mating surfaces.**

(2) Voids between the skin and core shall not exceed 1.0 inch in width (chordwise) by 25.0 inches long. Voids within 1.0 inch of each other are to be considered one void.

(3) Voids between the skin and the spar not wider than 0.25 inch are acceptable. Voids not larger than 0.38 inch by 2.0 inches are acceptable, provided spacing between void centers exceeds 6.0 inches. Edge voids are acceptable up to 0.08 inch deep.

(4) Edge voids between the edge of the skin and the trailing edge extrusion, that are less than 0.08 inch wide by any length or less than 0.18 inch wide by 10.0 inches long, are acceptable.

2-52. INSPECTION — LEADING EDGE CORROSION/ EROSION.

a. Measure the chord line dimension of the blade, adjacent to the area of corrosion that will be cleaned-up, using a micrometer caliper or equivalent. (See figure 2-2. Area A.) This measurement minus the maximum of 0.125 inch clean-up at the leading edge will determine that the remaining leading edge thickness is within limits.

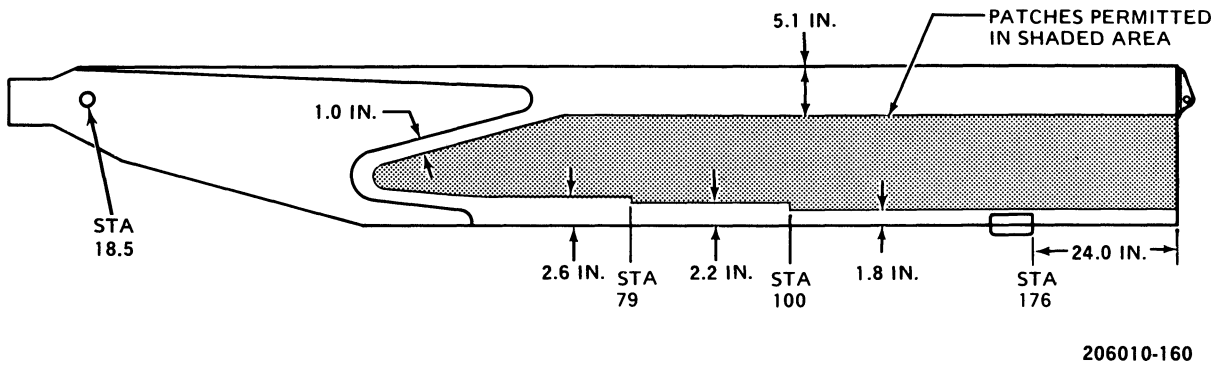

Figure 2-40. Main Rotor Blade — Rework

Example:

Measured dimension A	13.009 inches
Maximum clean-up allowed	0.125 inches
Minimum dimension a measurement allowed to the deepest part of the cleaned-up area	12.884 inches

Note

Two squares clamped opposing each other and wire or feeler gages can be used to obtain dimension A accurately.

b. An alternate measurement can be made by removing tip cap and measuring thickness from the aft side of spar to the leading edge. (See figure 2-2) If chordwise measurement is 0.6250 inch or less, replace blade.

c. If dimension calculated in subparagraphs a. or b. are within limits, repair blade in accordance with paragraph 2-56.

2-52A. INSPECTION AND REPAIR — MAIN ROTOR BLADE (206-010-200-33) RETENTION BUSHING.

a. Inspect retention bushing for corrosion, pitting, elongation, and size.

b. Main retention bushing must be replaced if inside diameter exceeds 1.524 inches.

c. Any corrosion or pitting of retention bushing in excess of replacement dimension, after polishing, is cause for replacement. Local polishing, in excess of replacement dimension, is acceptable.

d. Immediately after retention bushing clean-up, apply a coat of corrosion preventive compound (item 24) to inside surface.

e. Replacement of retention bushing may only be accomplished by a repair station having the capability to master sweep and balance blades.

2-53. SPOT REPAIR AND TOUCHUP REFINISHING PROCEDURE. This paragraph provides step-by-step instructions for spot repair and touchup refinishing procedures for rotor blades. This procedure also provides minor repairs of defects, such as corrosion, nicks, scratches, and in some instances blistering of paint finish noted during 100 Hour Inspection. Detail repair procedures are contained in paragraphs 2-55 and 2-56.

CAUTION

Use care when using naphtha and other toxic materials. Avoid breathing vapors and use in a well ventilated area. Avoid repeated contact with skin.

a. Degrease with naphtha (item 36), or solvent (item 12), or any good commercial degreasing solvent which will not smear or remove paint finish.

b. Using abrasive cloth (item 13), or medium grit No. 180 or finer sandpaper (item 90), remove all surface oxides in area to be repaired. This may include removal of some paint finish to allow for feathering area of repair.

Note

All sanding to be accomplished in a spanwise direction only.

c. Wash blade surfaces with a mild detergent soap cleaner (item 79) mixed 10 to 15 percent, by volume, in water. Achieve water break free surface which will be evident by a continuous unbroken film of water on the surface after thoroughly rinsing the soap from the surface.

d. On all surfaces where corrosion has been polished out apply alcoholic phosphoric solution (item 33) using a clean cloth or brush. Rub solution briskly into surface for approximately 40 to 60 seconds.

e. Rinse the blade thoroughly with clean running water and wipe dry with clean cloths.

Note

From completion of paragraph e. through final paint application, surfaces of blades are not to be handled with bare hands.

f. On all bare metal surfaces including surfaces covered in paragraph d, apply or spray (using brush solution) application of alodine conversion coating solution (item 6 or 32). If not available, use an application of 10 percent solution of chromic acid (item 81). Refer to table 6-3 for mixing instructions. After 1 minute, wipe with a damp cloth and dry with a clean cloth.

Note

If material referenced in paragraph d is not available, use material referenced in para. 2-56a.(3). If neither is immediately available, the bare aluminum may be coated with zinc chromate primer (item 80). This is temporary protection only. Do not refinish the area in accordance with paragraphs g. through j. until paragraphs d. and f. have been accomplished.

g. Thoroughly dry the cleaned surfaces. Apply one light coat (0.3 to 0.5 mils) of polyamide epoxy primer (item 56) or equivalent. Allow to air dry from 45 minutes to 4 hours.

h. Apply EC-2216 adhesive spray coating (item 10) over reworked areas only. Apply three coats over trim tab and doublers, one coat over butt joint of skin to abrasive strip or butt joint of skin to spar where applicable, and skin to trailing edge strip. Allow adhesive to air dry 45 to 60 minutes between coats.

WARNING

Methyl-ethyl-ketone is toxic and flammable. Use only in well ventilated area. Do not use near open flame.

Note

Mix EC-2216 adhesive (item 10) per manufacturer's instructions. Then mix 13 percent to 15 percent (by weight) of polyamide epoxy primer (item 56) into the EC-2216 adhesive and mix thoroughly. Thin to a sprayable consistency by adding methyl-ethyl-ketone (item 17) not to exceed 50 percent by volume of mixed EC-2216 adhesive (approximately 35 percent by volume will produce a sprayable consistency). Pot life of thinned EC-2216 is approximately 3 hours. After application of final coat of EC-2216 adhesive, allow blade to air-dry at 70° to 80°F (21° to 27°C for 16 to 24 hours.

i. Apply a light mist coat of polyamide epoxy primer (item 56). Allow to air dry 1 hour to 8 hours maximum.

j. Apply first coat of acrylic lacquer (item 94) to touchup areas on surface of blade. Spray only repaired areas. Allow one hour minimum drying time, then apply a second coat. Allow one hour minimum drying time before applying any other paint over second coat.

2-54. MAIN ROTOR BLADE REPAIRS.

The following paragraphs provide step-by-step instructions for repairs, which should be accomplished as routine maintenance on removed blades.

2-55. REPAIR — NICKS, SCRATCHES, DENTS, NOTCHES, AND BENT TRIM TAB.

a. Polish out all nicks and scratches described in paragraph 2-53 using aluminum wool (item 91, table 1-1).

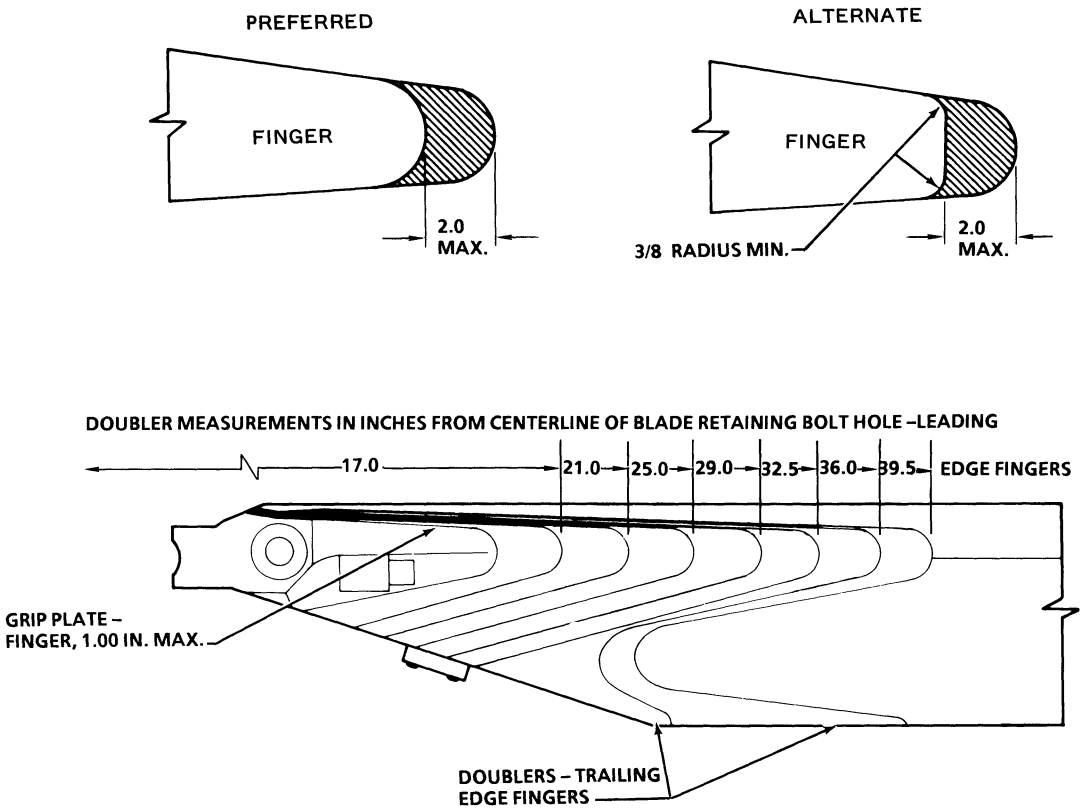

NOTE: ALL DIMENSIONS ARE IN INCHES

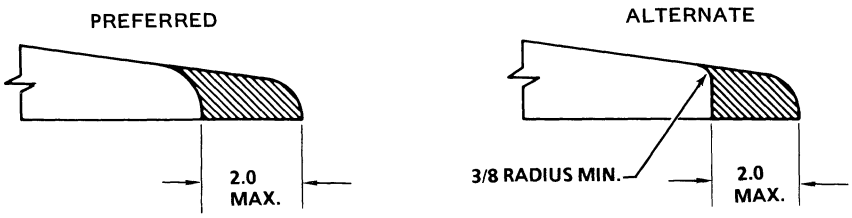

CAUTION

DO NOT TRIM LEADING OR TRAILING EDGE DOUBLER FINGERS PAST 2.0 INCH MAXIMUM OF ORIGINAL DOUBLER LENGTH. MEASURE ORIGINAL LENGTH FROM CENTER LINE OF BLADE RETAINING BOLT HOLE.

206010-149A

Figure 2-41. Main Rotor Blade — Removing Corrosion at Doublers and Grip Plates

Lightly sand the painted surfaces immediately surrounding the polished areas with sandpaper (item 90, table 1-1).

b. Repair nicks, scratches, and notches in the trailing edge strip, which do not extend forward more than 0.120 inch, by removing material faired out over a distance of 2.0 inch (minimum) on each side of nick.

c. On all surfaces where corrosion has been polished out, apply alcoholic phosphoric solution (item 33, table 1-1) using a clean cloth or brush. Rub solution briskly into surface for approximately 40 to 60 seconds.

d. If the trim tab is bent and no evidence of bond separation exists, straighten the tab with a heavy mallet and a heavy back up block or suitable tool. Reset the proper angle using a trim tab bending tool (T101444) and tab gage (T101445).

e. Refinish repaired areas in accordance with paragraphs 2-53 or 2-61 .

2-56. REPAIR — LEADING EDGE CORROSION/ EROSION.

a. If chordwise measurement is 0.6250 inch or less, replace blade. If dimension is within limits, repair blade leading edge as follows:

Note

All sanding must be accomplished in spanwise direction only.

(1) Sanding leading edge spanwise with No. 180 grit sandpaper or finer (item 90, table 1-1 with a final cleaning using aluminum wool (item 91, table 1-1). Sanding shall be accomplished by hand only and to a depth to remove corrosion/erosion. Blend edges of the sanded areas into adjacent areas to maintain the shape of the airfoil. (See figure 2-2, Area B and C.)

Note

Do NOT sand the skin to the spar butt joint. A minimum leading edge thickness of 0.625 inch must be maintained after corrosion clean-up. (See figure 2-2, area B.)

(2) Remove sanding residue with naphtha (item 17, table 1-1) or solvent (item 77, table 1-1).

(3) On all surfaces where corrosion has been polished out, apply alcoholic phosphoric solution (item 33, table 1-1 using a clean cloth or brush. Rub solution briskly into surface for approximately 40 to 60 seconds.

b. Refinish repaired areas in accordance with paragraphs 2-53 or 2-61 .

2-56A. REPAIR — GRIP PLATE AND DOUBLER CORROSION AND SEPARATION. Main rotor blades having corrosion and separation in the bond line of the grip plates and doublers (leading and trailing edge fingers) shall be repaired as follows: (See figure 2-41).

Note

This repair method involves removing a portion of the tip of a doubler or grip plate to expose the corroded or separated area so that the corrosion and separation can be removed and arrested. All upper and lower doubler tips may be trimmed a maximum of 2.0 inches. When a doubler is trimmed more than 1.0 inch, an equal amount of that over 1.0 inch must be trimmed from the adjacent shorter doubler tip. The grip plate tang shall not be trimmed beyond the 1.0 inch allowed. The grip plates shall only be trimmed in the elimination of corrosion or bondline separation.

a. Determine depth of tip separation by lightly tapping the doublers or grip plates with a light weight hammer. A 0.0015 inch feeler gage may be used; however, it will not give an accurate measurement of the separation depth.

b. If separation depth is less than 2.0 inches cut off only the minimum amount required to entirely eliminate the void or separation. Use a fine tooth hacksaw or file to cut laminate.

c. Mask off area adjacent to doubler or grip plate being trimmed with masking tape to prevent damage to blade skin, doubler, or spar. File or cut doubler or grip plate almost through, then raise outboard end to finish breaking. Extreme care must be used to prevent damage to blade skin, doubler, or spar under doubler being removed.

d. Remove tool marks and burrs with a smooth sided file. It is preferred the complete end of the doubler be trimmed on a radius one-half the width of the doubler or grip plate at the point where it is cut as shown in figure 2-41 .

e. Radius corners a minimum of 3/8 inch when doublers or grip plates are trimmed by alternate method. Trim trailing edge doublers to original shape or alternate shape as shown in figure 2-41 . After trimming, recheck end of doublers or grip

plates by tapping to ensure the void no longer exists.

f. Inspect reworked area to ensure all corrosion has been removed.

g. On all surfaces where corrosion has been polished out, apply alcoholic phosphoric solution (item 33, table 1-1) using a clean cloth or brush. Rub solution briskly into surface for approxiamtely 40 to 60 seconds.

h. Apply brush or spray application of chemical film treatment (item 32, table 1-1) to all bare aluminum surfaces and refinish blades in accordance with paragraph 2-63b through h.

i. For additional corrosion protection it is recommended the grip doublers, trim tab bond lines and trailing edge bond line be sprayed with EC 2216 sealer. (Refer to paragraph 2-64)

2-57. REPAIR — DAMAGE SKINS.

CAUTION

Repairs described in these paragraphs that are inboard of Station 164 MUST BE INSPECTED FOR CRACKS DAILY.

Note

Scratches, nicks, gouges, tears, holes, etc. in the skins that exceed the limits specified in paragraph 2-50 and that do not touch or damage in any way the trailing edge strip or the spar, or that do not come within 1.0 inch of the doublers, may be repaired by patching as described in this part and returned to service. These limits must be met after the hole is cleaned up for patching.

a. Cut out the skin around the damaged area. This may be accomplished by using a hole saw or scribing through the skin with a sharp instrument.

Note

If a circular hole is cut out to remove the damaged area, it must NOT exceed 2.0 inches in diameter. However, it is permissible to cut out an "oblong" hole if the general direction of the hole falls within 15 degrees of a line parallel to the leading edge or trailing edges of the blade. Maximum size of the "oblong" hole shall NOT exceed 1.0 inch wide by 4.0 inches long. The ends of the hole must have a minimum radius of 0.25 inch.

It is not necessary to cut a hole if the defect can be polished smooth without leaving the skin in the area so thin that it can be dented with fingernail pressure. In these cases, the area still must have a patch applied in the same manner as though the hole existed. Maximum diameter of a patch of this type is to be 4.0 inches with at least 0.75 inch of bonded area around the perimeter of the dent.

b. Remove the skin in the cut out area disturbing the core as little as possible. It is desirable to heat the cut out disk to 200°F (93°C) maximum and lift out the disk of skin while heated.

c. Deburr the edges of the hole making sure the skin is free of scratches and nicks.

d. Remove all paint from around the hole in the area the patch will cover using clean rags wet with methyl-ethyl-ketone (item 17, table 1-1). Do NOT allow any methyl-ethyl-ketone to enter the blade. Use No. 180 grit sandpaper (item 90, table 1-1) to remove Super Koropon primer.

e. Prepare a patch of 2024-T3 aluminum alloy, 0.020 thick. The patch must be large enough to overlap the hole at least 0.75 inch all around the perimeter. Deburr the edges of the patch.

f. Sand the mating surfaces of the blade and the patch using No. 400 grit paper (item 90, table 1-1). Wipe both surfaces clean with a rag wet with methyl-ethyl-ketone (item 17, table 1-1) and dry with a clean cloth.

CAUTION

The areas to be bonded must be clean, dry and free of grease, oil, wax, etc.

g. Apply epoxy adhesive (item 31 or 41, table 1-1) to the bond areas of the patch and the blade.

h. Apply the patch to the blade, moving the patch slightly back and forth under pressure to seat it properly and to expel air pockets in the adhesive. Blend out excess adhesive around the edges.

i. The patch may be held in place while curing with rubber bands made from an innertube or other mechanical means. If EA-934 is used, cure at 75°F (23.9°C) minimum for 24 hours or at 180°F (82°C) for 60 minutes. If using Metalset A4, cure at 70° to 90°F (21.1° to 32.2°C) for 24 hours or at 145° to 155° (63° to 85°) for 30 minutes. To accelerate curing time, apply heat to the area with a 200 watt lamp 12 inches from patch. Heat should be applied until adhesive is completely firm (will resist fingernail penetration).

j. Refinish the area in accordance with paragraph 2-63.

k. Install main rotor blades and align and balance main rotor hub and blade assembly. (Refer to paragraph 2-15 through 2-17.)

2-58. REPLACEMENT — ROOT END CLOSURE.

Note

The root end closure must be replaced if it is loose or if it is damaged to an extent that it cannot be repaired without removing.

a. Remove the old closure taking care not to damage the spar, doublers or grip plates.

b. Clean off the old adhesive using No. 180 to 240 grit sandpaper (item 90, table 1-1). Wipe the area with a cloth

dampened with methyl-ethyl-ketone (item 17, table 1-1) until the cloth remains clean.

c. Clean a new closure (206-010-231) or the old closure, if it is in a useable condition, by sanding and wiping as follows:

(1) Apply brush or spray (using brush solution application of chemical conversion coating (item 32, table 1-1). If not available, use application of alcoholic-phosphoric acid (item 33 table 1-1) or a 10 percent solution of chromic acid (item 81, table 1-1).

Note

From completion of step (1) through final point, closure should not be handled with bare hands.

(2) Thoroughly dry cleaned surfaces.

d. Mix EC-2216 adhesive, Parts "A" and "B" (item 10, table 1-1), as follows: 140 parts by weight of Part "A" (gray in color) with 100 parts by weight of Part "B" (white in color). Parts to be mixed in a clean container. Adhesive must be used within 2 hours.

e. Apply mixture of EC-2216 adhesive to the mating surfaces of the blade and closure.

f. Place the closure in position on the blade and gently move it back and forth while pressing against the blade. Remove excess adhesive by wiping with a clean cloth.

g. Allow adhesive to cure 24 hours at 70° to 80°F (21.1° to 26.7°C) or for 2 hours at 145° to 155°F (63° to 68°C).

h. Touch up the paint in accordance with paragraph 2-63h.

2-59. REPLACEMENT — TRIM TAB.

Note

If the trim tab is cracked or bent to an extent that it cannot be straightened, or if edge voids develop deeper than 0.12 inch between the trim tab and the blade, then it should be removed and replaced in accordance with the following instructions. Edge voids 0.12 inch deep or less may be sealed with EA-934 epoxy adhesive (item 31, table 1-1) unless there is evidence of corrosion in the void. If any corrosion exists, replace the trim tab.

a. Remove the old trim tab by cutting off the portion that extends beyond the trailing edge of the blade. Cut approximately 0.12 inch beyond trailing edge of blade.

b. Very carefully peel the tab from the blade by starting at a corner using a sharpened putty knife, or equivalent, to separate the bond. Use extreme care not to pull the skins loose from the core and trailing edge strip.

c. Remove all old adhesive from the blade by sanding in a spanwise direction, starting with No. 200 grit and finishing with 400 grit sandpaper (item 90, table 1-1). If any evidence of corrosion exists on the skin or trailing edge strip, it must be polished out completely. Do not polish more than 0.008 inch deep in the skins nor more than 0.030 inch deep in the trailing edge strip.

d. Sand off the paint for a distance of 0.25 to 0.50 inch around the perimeter of the area where the new trim tab will be bonded, sanding spanwise starting with 200 grit and finishing with No. 400 grit sandpaper (item 90, table 1-1).

e. Clean the area by wiping with a clean cloth dampened with methyl-ethyl-ketone (item 17, table 1-1). Continue with new cloths until surfaces are completely clean. Wipe dry with a clean cloth.

f. Obtain a new trim tab assembly (206-010-219-9). Peel the peel ply fabric from the inner surfaces of the trim tab exposing the cured adhesive on those surfaces.

CAUTION

Do not contaminate the inside surfaces after removing the peel ply. Use clean white cloth gloves while handling the trim tab.

g. Apply epoxy adhesive (item 31, table 1-1) to the inside surfaces of the trim tab and to the clean mating surfaces of the blade.

h. Install the trim tab on the blade. The outboard edge of the tab is to be located at Station 176.00 on the, (206-010-200-29 or -33) blades, or bonded 24.0 inches from outboard end of trim tab to outboard end of blade. (See figure 2-40)

i. Bond the trim tab to the blade using 5 to 30 psi pressure (applied with clamps). Cure for 2 hours at 140° to 160°F (60° to 71°C). "C" clamps and wood blocks approximately the size of the tabs may be used as a pressure device. A rubber pad 1/16 to 1/8 inch thick, approximately 40 durometer, should be used between the wood block and tab to distribute the pressure evenly.

j. Remove clamps and clean up excess adhesive squeeze-out. Wipe the tab and surrounding area of the blade with a clean cloth dampened with methyl-ethyl-ketone (item 17, table 1-1), then wipe dry with a clean cloth. Fair around the edges of the tab with fairing compound (item 3, table 1-1) or EA 960 adhesive (item 74, table 1-1).

k. On all bare aluminum apply a brush or spray coat of chemical conversion (alodine, item 6, table 1-1 . If not available, use application of alcoholic-phosphoric acid (item 33, table 1-1) or a 10 percent solution of chromic acid (item 81, table 1-1). Air dry.

l. Re-finish the area, including the new trim tab, in accordance with paragraph 2-63.

2-60. REPLACEMENT — BLADE GRIP PAD.

Note

If the grip pad (206-010-233) is loose or damaged it must be replaced.

a. Remove the old pad by prying it loose, being very careful not to damage the blade.

CAUTION

The surface of the blade grip plate around the hole has been shot peened. Do NOT sand through the shot peened surface. If evidence of shot peen "pits" remain, the sanding operation is acceptable. If all evidence of shot peening is removed in any area, the blade must be re-shot peened in accordance with applicable instructions. It is not necessary to remove old adhesive in the shot peen pits.

b. Remove old adhesive from the blade by sanding with No. 180 to 240 grit sandpaper (item 90, table 1-1 .

c. Wipe the bonding surface of the blade with a clean cloth dampened with methyl-ethyl-ketone (item 17, table 1-1). Wipe dry with a clean cloth.

d. Obtain a new (206-010-233-5) grip pad. Peel the peel ply fabric from the surface to which adhesive has been bonded. Use care not to contaminate the adhesive. Locate pad concentric within 0.02 inside diameter of bushing.

e. Coat the EXISTING adhesive surface of the blade grip pad and the mating surface of the blade with EA-934 epoxy-adhesive (item 31, table 1-1).

f. Place the pad on the blade around the retention bolt hole. Apply 5 to 30 psi pressure and cure for 24 hours at 70° to 95°F (21.1° to 35.5°C), or 60 to 70 minutes at 170° to 190°F (77° to 88°C).

Note

After bonding, the distance between the outside faces of the grip pads, on the top and bottom of the blades, must be 3.297 to 3.308 inches. This can be held by accomplishing the following while bonding:

(1) Measure the distance between the top and bottom grip plate surfaces in the areas around the blade grip pads.

(2) Subtract this dimension from 3.303 inches and divide the result by 2. (This should result in a dimension of approximately 0.016 inch). Obtain a shim the thickness of this dimension plus or minus 0.002 inch. Cut out a hole in the shim that is 0.12 inch larger in diameter than the blade grip pad.

(3) Place the shims around the blade grip pad (which has been positioned around the bolt hole), and place a bar across the shims and the pad.

(4) Intall clamps over the bar and tighten until the bar bottoms on the shim. Allow adhesive under blade grip pads to cure as previously instructed. Remove clamps, bar, and shim and clean up excessive squeeze-out.

g. Wipe the area clean with cloths dampened with methyl-ethyl-ketone (item 17, table 1-1) and touch up paint around the blade grip pad.

2-61. MAIN ROTOR BLADE REFINISHING.

Note

Install, align, and balance blade after refinishing.

2-62. CLEANING PROCEDURE.

a. Protect all openings to prevent entry of cleaning and refinishing materials.

b. Degrease with naphtha (item 36, table 1-1) or equivalent.

Note

The following steps are intended for touch-up painting only. Do NOT remove paint from entire main rotor blade.

c. Using cloth pads soaked with methyl-ethyl-ketone (item 17, table 1-1) strip lacquer finish from blade. Do not remove the Super Koropon primer except in areas where the primer is cracked or deteriorated or in areas where the

metal appears to be corroded or otherwise damaged. Remove primer in these areas down to bare metal, using Scotchbrite pads (item 9, table 1-1) in conjunction with a cloth pad soaked with methyl-ethyl-ketone (item 17, table 1-1). The process consists of wetting the surface with the methyl-ethyl-ketone soaked pad and then scrubbing with a piece of the Scotchbrite until surface has dried or paint has been removed. If the paint is not removed, repeat application of methyl-ethyl-ketone followed by Scotchbrite, rub until paint is removed.

d. After corrosion pits have been removed and repairable nicks and scratches have been polished out, remove surface oxidation from the entire blade by scrubbing thoroughly with Scotchbrite pads (item 9, table 1-1) and a solution of neutral soap (item 35, table 1-1).

e. Rinse thoroughly with clean running water. Achieve water breakfree surface which will be evident by a continuous unbroken film of water on the surface.

f. In areas of corrosion removal apply alcoholic phosphoric solution, (item 33, table 1-1) using a clean cloth or brush. Rub briskly for approximately 40 to 60 seconds.

g. Rinse the blade thoroughly with clean running water and wipe dry with clean cloths.

Note

From completion of this step through final paint, surfaces of blades should not be handled with bare hands.

h. On all bare aluminum, including areas treated in para. f. apply brush or spray (using brush solution) application of chemical conversion coating (item 32, table 1-1). If not available, use application of 10 percent solution of chromic acid (item 81, table 1-1). Rinse for break free surface. Thoroughly dry the cleaned surfaces.

2-63. TOUCH-UP REFINISHING.

a. Remove the tip cap assembly and plug the holes in the end of the spar to keep paint out.

CAUTION

Use care when using naphtha and other toxic materials. Avoid breathing vapors and use in a well ventilated area. Avoid repeated contact with skin.

b. Clean and treat main rotor blades in accordance with paragraph 2-62.

c. thru e. Deleted.

f. Thoroughly dry the cleaned surfaces. Apply one light coat (0.3 to 0.5 mils) of polyamide epoxy primer, (item 56, table 1-1) or equivalent. Allow to air dry from 30 minutes to 4 hours before next step.

Note

See note following subparagraph g (3) below.

g. Apply EC-2216 adhesive spray coating (item 10, table 1-1) in areas specified in steps (1) through (4) below (one to three coats as applicable), then apply a thin mist coat of primer as specified in step (6) below.

Note

Mix EC-2216 per manufacturer's instructions. Then mix 13 percent to 15 percent (by weight) of primer (item 56, table 1-1) into the EC-2216 adhesive (item 10, table 1-1). Mix thoroughly. Thin to a sprayable consistency by adding methyl-ethyl-ketone (item 17, table 1-1) not to exceed 50 percent by volume of the mixed EC-2216 adhesive (approximately 35 percent by volume will produce a sprayable consistency). Pot life of the thinned EC-2216 adhesive is approximately 3 hours.

(1) Apply three wet spray coats (1.5 to 2.0 mils each coat) or EC-2216 adhesive (mixed as noted above) to the doublers, from the root end of the blade to a distance of approximately 3/4 inch outboard (follow contour) of the bottom doubler (the doubler adjacent to the skin) on each side of the blade. Do not coat the faying surfaces of the grip plates or wear pads. Allow to dry 45 to 60 minutes between coats.

(2) Apply three wet spray coats of EC-2216 adhesive (by the same method specified above) to the trim tab. Extend spray coats of a minimum of 3/4 inch beyond edges of the trim tab onto the surfaces of the blade.

(3) Apply one wet spray coat of EC-2216 adhesive (by the same method specified in step (1) above), approximately 2 inches wide centered on the joint between the skins and spar (at the leading edge of the skins), and centered on the joint between the skins and the trailing edge extrusion. Spray coat to extend from the doublers to the tip of the blade.

Note

It is not necessary to apply coats of EC-2216 adhesive (as specified in steps (1), (2) and (3) above) over existing undamaged areas. If spot application only is being accomplished over damaged areas (see following Note), it is to be accomplished in accordance with the above paragraphs, taking care to achieve full coverage with the proper number of coats.

Note

It is not necessary to remove the primer and the EC-2216 adhesive spray coat around the doublers, trim tab and the leading edge and trailing edge of the skins. If there are areas where primer or EC-2216 adhesive is damaged by wear, scratches, etc., strip the finish mechanically.

(4) Mechanical strip the primer and/or EC-2216 from damaged areas by sanding with an air powered or electrical sander (orbital or jitterbug type) or hand sanding. Use 180 grit sandpaper, (item 15, table 1-1) with powered sanders and 240 grit for hand sanding.

CAUTION

The technique of sanding shall preclude the danger of digging into the bare metal or any section of the blade. To accomplish this, the enforcement of utilizing flat circular motion will prevent digging as well as excessive sanding either of which can be detrimental.

(5) After application of final coat of EC-2216 adhesive, allow blade to air dry at room temperature for 16 to 24 hours.

(6) Apply one thin mist coat of primer over the entire blade surface including the EC-2216 adhesive coated surfaces. Allow the primer to air dry a minimum of 30 minutes and a maximum of 4 hours before proceeding with applications of lacquer in the next subparagraph. If the primer has dried more than 4 hours, the lacquer will not properly adhere.

h. Apply two to three coats of Navy Formula P-95 acrylic lacquer (item 5, table 1-1) on touch-up areas. Colors to match surrounding areas as specified in subparagraph (1) and (2) below.

(1) Final Topcoat.

(a) Upper Surfaces – Apply two or three coats (as applicable in order to attain a topcoat thickness of 1.2 to 1.5 mils) of P-95 lacquer FED-STD-595, color number 16473, gloss gray. (Refer to table 2-6.)

(b) Lower Surfaces and Root End and 206-010-238 Weights – Apply two or three coats (as applicable in order to attain a top coat thickness of 1.2 to 1.5 mils) of P-95 lacquer FED-STD 595, color number 37038 black (camouflage). (Refer to table 2-6)

(2) Blade Tip Color. Blades shall have the exterior surfaces of the 206-010-203 weight support organic finished using orange Yellow P-95 acrylic lacquer FED STD 595 color number 33538. (Refer to table 2-6 .)

(3) Air dry blade a minimum of 48 hours before flying after final paint coat. Alternate method; Oven dry at 180°F (82°C) for one hour.

2-64. ABRASION AND CORROSION RESISTANT COATING (EC-2216). The original blade finish included an abrasion and corrosion resistant coating (EC-2216). Inspect the edges of the doublers and joint areas of the blade to determine if the EC-2216 coating is present (a pronounced "build-up" at the edges will be evident). If the EC-2216 coating is present, proceed to table 2-6 and omit steps 2 and 3. If the EC-2216 coating is not present, refer to paragraph 2-63 , step g, for mixing instructions and to table 2-6 for painting requirements.

2-65. Deleted.

Table 2-6. Painting Requirements Main Rotor Blade

STEP	PAINT TYPE AND SPECIFICATION	METHOD OF APPLICATION	NO. OF COATS	NOTES
1	Primer,polyamide epoxy	Spray	2	On bare areas of blade, apply one coat spanwise and one coat chordwise. Total dry film thickness 1 mil (0.001 inch) to 1-1/2 mils (0.0015 inch). Apply thin mist coat over remainder of blade, air dry minimum 45 minutes and maximum 4 hours.
2*	EC-2216 Abrasion and Corrosion Resistant Coating	Spray	See Notes	Refer to paragraph 2-63 for mixing of EC-2216. Apply three wet spray coats of EC-2216 from the butt end of the blade to a distance 3/4 inch to 3 inches outboard (follow contour) of the largest doubler. Do not apply to surfaces of wear pads or on grip faying surface of grip pads. Three coats over trim tab extending 1/2 inch minimum beyond adhesive squeeze-out onto blade surfaces. Apply one wet coat entire length of blade (both sides) using butt joint between spar and skin as center line of spray. Apply one wet coat entire length of blade (both sides) using butt joint between trailing edge strip and skin as center line of spray. Air dry at 75° to 80°F (23.9 to 26.7°C) for 45 to 60 minutes between coats. After final coat, air dry 75° to 80°F (24° to 27°C) for 16-24 hours or allow coating to air dry 30 minutes at 75° to 80°F (23.9° to 26.7°C), followed by heat lamp application for 2 hours at 150° - 160°F (65° - 71°C).
3*	Primer, polyamide epoxy		1	One thin mist coat over touch up areas. Air dry 75° to 80°F (23.9 to 26.7°C), 45 minutes to 4 hours.
4	P-95 Lacquer Color No. 16473 Fed. Std. 595 Gloss Gray	Spray	3	Upper surfaces of blade. Allow minimum 1 hour dry between coats.
5	P-95 Lacquer, Fed. Std. 595, Color No. 37038 Black	Spray	3	Root end and entire lower surface of blade. Allow minimum 1 hour dry between coats.
6	P-95 Lacquer, Fed. Std. 595, Color No. 33538 Orange Yellow	Spray	1	Exterior surfaces of tip cap only. Allow minimum 30 minutes drying time.

*Omit steps 2 and 3 if EC-2216 coating is not required.

2-66. INSTALLATION OF TAPE TO MAIN ROTOR BLADES FOR EROSION PROTECTION.

Note

Use of polyurethane tape (item 72, table 1-1) is optional with the individual operator. Its use is recommended for protection against abrasion of the leading edge of the blade in areas of high sand and dust conditions. It affords medium protection against rain. The tape may be removed and replaced with new tape as often as necessary. When tape ends release or appear loose on the rotor blade, the tape must be removed prior to flight.

a. New blades with final paint finish fully cured shall be wiped with a clean cloth or rag dampened with naphtha (item 36, table 1-1) and wiped dry prior to full evaporation of the naphtha.

(1) Blades that have been in service shall have all contamination cleaned off using Scotchbrite pads (item 9, table 1-1), or equivalent, followed by wiping with a clean cloth dampened with naphtha and wiped dry with a clean cloth.

(2) Blades that are having the tape replaced are to be treated the same as blades that have been in service. Tape may be removed and replaced as often as necessary.

b. Cut a strip of tape (item 72, table 1-1) 6.0 inches wide by 96 inches long. The tape must be the same size (within reasonable limits) for each blade of a set to prevent an out-of-balance condition.

c. The tape shall be applied to the blade by a minimum of two people. Place one end of the tape flush with the tip end of the blade so that equal coverage will be applied to the bottom and top surfaces. Using a plastic spatula or similar tool, firmly affix the tape to the extreme leading edge of the blade for the full length of the tape

d. Using the spatula or similar tool, affix the tape firmly to each side of the leading edge. In the event an air bubble is entrapped, raise that area of the tape, releasing the air, and reaffix the tape firmly. Properly applied, the tape should show no evidence of air bubbles.

e. Inspect the tape daily for proper adhesion and tape condition. Replacement is to be based on the daily inspection findings.