Section III
Tail Rotor Hub and Blade Assembly

TABLE OF CONTENTS

Paragraph Number	Title	Page Number
3-1	Tail Rotor Hub and Blade Assembly	3-1
3-3	Removal — Tail Rotor Hub and Blade Installation (206-011-700)	3-1
3-4	Removal — Tail Rotor Hub and Blade Installation (206-011-720)	3-1
3-7	Inspection and Repair — Tail Rotor Hub Assembly (206-011-810)	3-4
3-10	Installation — Tail Rotor Blades	3-11
3-11	Balancing — Tail Rotor Hub and Blade Assembly (206-011-810)	3-13
3-12	Installation — Tail Rotor Hub and Blade Installation (206-011-700)	3-15
3-13	Installation — Tail Rotor Hub and Blades (206-011-720 and 206-011-810)	3-16
3-14	Dynamic Balance — Tail Rotor Hub and Blade Installation	3-19
3-15	Tail Rotor Hub (206-011-810) Overhaul	3-21
3-19	Repair and Replacement	3-23
3-21	Tail Rotor Blade (Stainless Steel) Rework	3-31
3-25	Inspection and Repair — Tail Rotor Blades	3-33
3-26	Refinishing — Tail Rotor Blades	3-38
3-27	Reassembly — Tail Rotor Blades	3-39
3-28	Bearing Replacement — Tail Rotor Blades	3-39

LIST OF TABLES

Table Number	Title	Page Number
3-1	Tail Rotor Installation	3-17
3-2	Balance Weight Conversion	3-19

LIST OF FIGURES

Figure Number	Title	Page Number
3-1	Tail Rotor Installation (206-011-700)	3-2
3-2	Tail Rotor Installation (206-011-720)	3-3
3-3	Tail Rotor Hub and Blade Assembly (206-011-810)	3-5
3-4	Tail Rotor Crosshead — Damage Limits	3-6
3-5	Tail Rotor Pitch Link — Damage Limits	3-7
3-6	Tail Rotor Spacer, Static Stop and Knurled Nut — Damage Limits	3-8
3-7	Tail Rotor Balancing — Tool Application	3-14
3-8	Tail Rotor Hub Assembly (206-011-810)	3-22
3-9	Tail Rotor Hub (206-011-810) — Limits Chart	3-24

LIST OF FIGURES (Cont)

Figure Number	Title	Page Number
3-10	Tail Rotor Yoke (206-011-811) — Damage Limits	3-25
3-11	Tail Rotor Yoke Housing — Damage Limits	3-26
3-12	Tail Rotor Trunnion (206-011-812) — Damage Limits	3-27
3-13	Tail Rotor Pitch Horn (206-011-809) — Damage Limits	3-28
3-14	Tail Rotor Blade Assembly (206-016-201)	3-32
3-15	Tail Rotor Blade (206-016-201)	3-34
3-16	Tail Rotor Blade Rivet Installation	3-35
3-17	Tail Rotor Blade	3-36
3-18	Tail Rotor Blade Paint Scheme	3-39

Tail Rotor Hub and Blade Assembly Section III

3-1. TAIL ROTOR HUB AND BLADE ASSEMBLY.

3-2. DESCRIPTION. The tail rotor hub and blade assembly consists of an aluminum alloy forged yoke and metal blades. The blades are mounted in the yoke by means of spherical bearings which are mounted in the grip plates on the pitch change axis. The spherical bearings provide for pitch change of the blades. The yoke and blade assembly is mounted on the 90-degree gearbox shaft by means of a splined trunnion, mounted in bearings in the yoke, to provide a flapping axis for the assembly.

3-3. REMOVAL — TAIL ROTOR HUB AND BLADE INSTALLATION (206-011-700).

a. Disconnect pitch links (13, figure 3-1) from rotor blades. Remove nut (20) from end of pitch change shaft (control tube, 3) and pull crosshead (23) from shaft. Lift pin (22) from shaft after crosshead is removed. Use battery terminal type puller to remove crosshead. (Refer to Section I.)

b. Cut safety wire and remove knurled nut (24) and liner (12).

c. Straighten washer (10) where it forms over nut (11) and remove nut. Remove washer (10), static stop (9), bumper (8), and shim (7) from tail rotor shaft. Slide tail rotor assembly off ninety degree gearbox shaft. Remove pin (1) and spacer (4). Discard washer (10).

Note

Shim (7) serves to limit flapping freedom and in turn the tail rotor blade-to-boom clearance. If the tail rotor is to be reinstalled, identify the shim for re-use in the assembly.

d. Inspect bearings in pitch links (13) for damage and excessive wear, maximum wear must not exceed 0.020 inch axial looseness.

3-4. REMOVAL — TAIL ROTOR HUB AND BLADE INSTALLATION (206-011-720).

Note

Steel washer (24A, figure 3-2) is used when stainless steel blades are installed.

a. Disconnect pitch change links (1) at crosshead (5) by removing nut (22), bolt (20), and washer (21) and at pitch horn (2) by removing nut (23), washer (24A), and cupped washer (24). Remove nut (3) and washer (4) from end of pitch control tube (7). Using a suitable puller, remove crosshead (5) from control tube (7) and remove pin (6).

b. Cut lockwire and remove knurled nut (8) and liner (9).

c. If balance wheel is installed, remove shims (25) and balance wheel (26).

Note

Balance wheel (26) is threaded onto shaft.

d. Straighten washer (10) where it is bent over nut (11) and remove nut.

e. Remove washer (10), static stop (12), bumper (13), and shim (14). Discard washer (10).

f. Slide tail rotor assembly off gearbox shaft (18) and remove pin (15) and spacer (17).

Note

Shim (14) serves to limit flapping freedom and in turn the tail rotor blade-to-boom clearance. If the hub and blade assembly is to be reinstalled, identify the shim for reuse in the assembly.

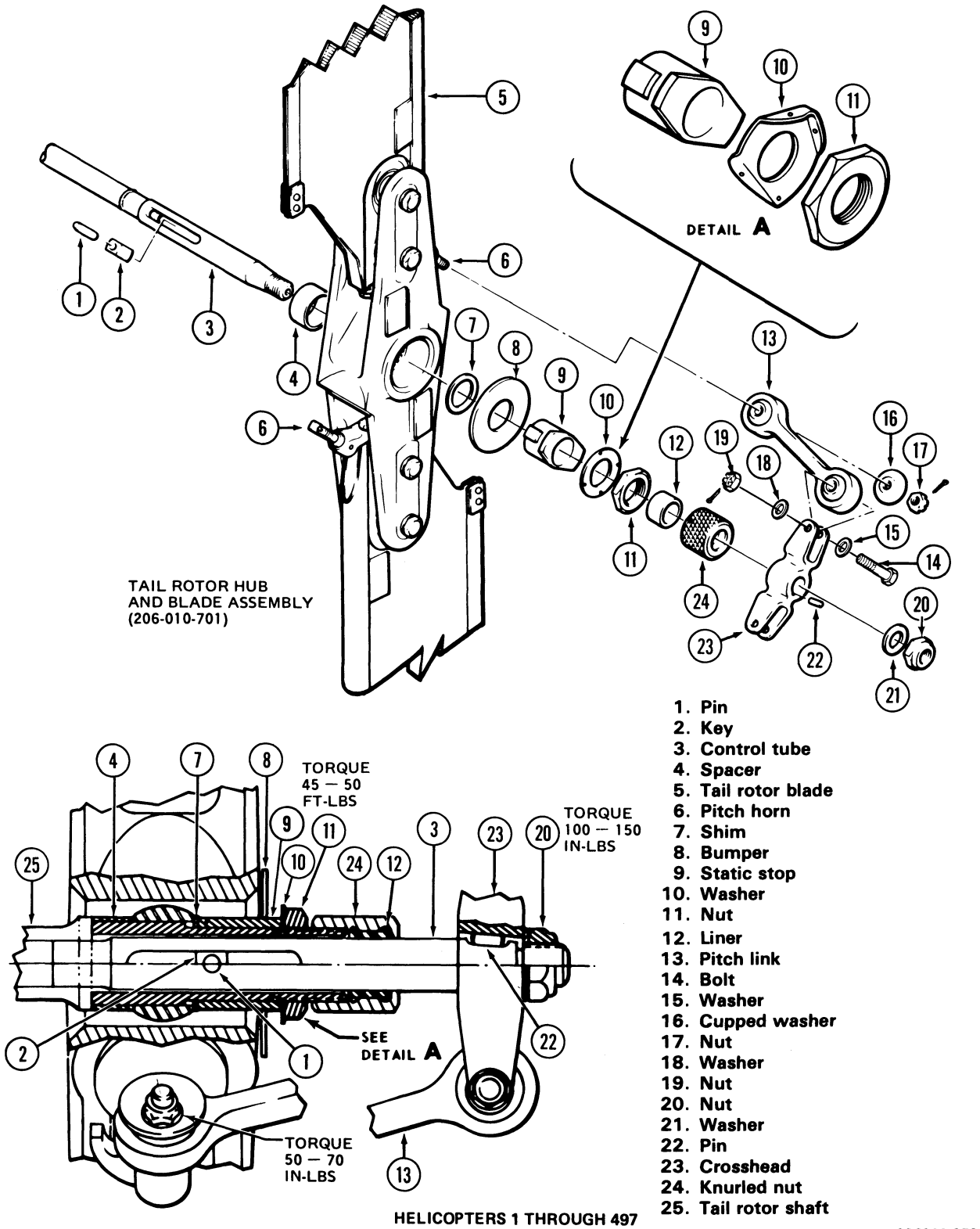

Figure 3-1. Tail Rotor Installation (206-011-700)

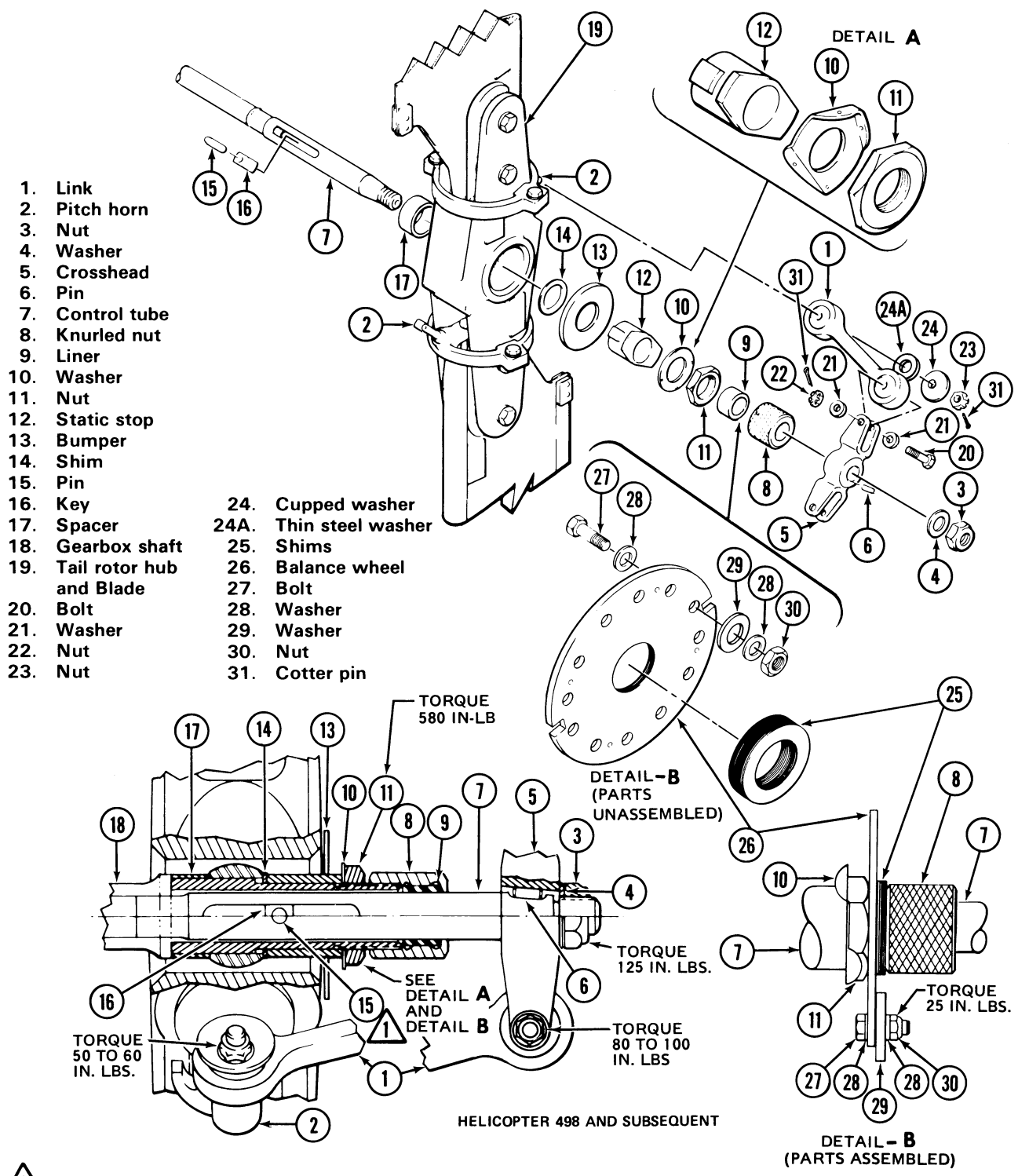

1 Maximum I.D. for pin hole in gearbox output shaft is 0.1910 inch.

Figure 3-2. Tail Rotor Installation (206-011-720)

3-5. REMOVAL — TAIL ROTOR BLADES.

a. Identify blades and yoke before removal of blade to ensure correct reinstallation. (See figure 3-3.) Ensure that each of the blade retention bolts (7), nuts (5), and washers (6) or (6A) are identified so that they can be replaced in their original positions to prevent change in spanwise balance.

b. Remove two blade-to-yoke bolts (7) and remove blade (2) from yoke (8). Remove opposite blade in same manner.

c. Inspect spherical bearings (3), for damage and excessive wear. Maximum axial play not to exceed 0.010 inch for bearings 206-010-721-3, -5 and 0.015 inch for bearings 206-010-765-1, provided no increase in airframe vibration is noted.

3-6. CLEANING — TAIL ROTOR HUB AND BLADE ASSEMBLY.

Clean all parts with drycleaning solvent (item 12). Dry with filtered compressed air.

3-7. INSPECTION AND REPAIR — TAIL ROTOR HUB ASSEMBLY (206-011-810).

Note

The (206-011-810) tail rotor hub and blade assembly may be used on all 206A/B helicopters, and is installed on helicopters 997 and subsequent.

a. Inspect yoke (8, figure 3-3) for damage. Minor nicks, scratches, and gouges may be polished out. Blend edges of repair area into surrounding surface with a smooth contour. Apply chemical film treatment (item 6 or 32) to repair areas.

(1) Inspect crosshead (23, figure 3-1 or 5, figure 3-2) for damage. Minor nicks, gouges, and scratches may be polished out. (Replace crosshead exceeding allowable limits shown in figure 3-4.)

(2) Inspect pitch links (13, figure 3-1 or 1, figure 3-2) for damage. Minor nicks, dents, and scratches may be polished out. (Replace parts exceeding allowable limits shown in figure 3-5.)

(3) Inspect spacer (17, figure 3-2), static stop (12), and knurled nut (8) for damage. Replace part/s exceeding allowable limits shown in figure 3-6.

b. Inspect trunnion (10, figure 3-3) for freedom of movement in bearings (11) and trunnion splines for nicks, burrs, and scratches. Dress splines with a fine india stone (item 95) as necessary.

c. Remove unserviceable trunnion bearings (11) and bearing races (20) as follows:

(1) Remove bolts (16), weights (18), and washers (17) securing bearing housing (12) to yoke (8).

Note

Weights (18, figure 3-3) and washers (17) were selected to balance hub and blade assembly; therefore, weights and washers shall be retained for reinstallation.

(2) Remove bearing housing (12) from yoke (8), using care not to damage bearing housing or bearing (11).

Note

Thrust plug (14) and shims (15) may remain in bearing housing (12) or in recessed end of trunnion (10).

(3) Remove thrust plug (14) and shims (15).

(4) Remove trunnion (10) from yoke (8), thrust plug (14) and shims (15) from opposite end of trunnion.

(5) Remove bolts (16), washers (17), weights (18) and bearing housing (12) from opposite side of yoke (8).

(6) Remove seal (19) and bearing (11) from bearing housing (12) as follows:

(a) Fabricate a steel plug 0.750 inch in diameter by 4 to 5 inches long. Ends of plug must be square in relation to the shank of the plug.

(b) Fill the bearing housing cavity approximately one-half full of high viscosity grease.

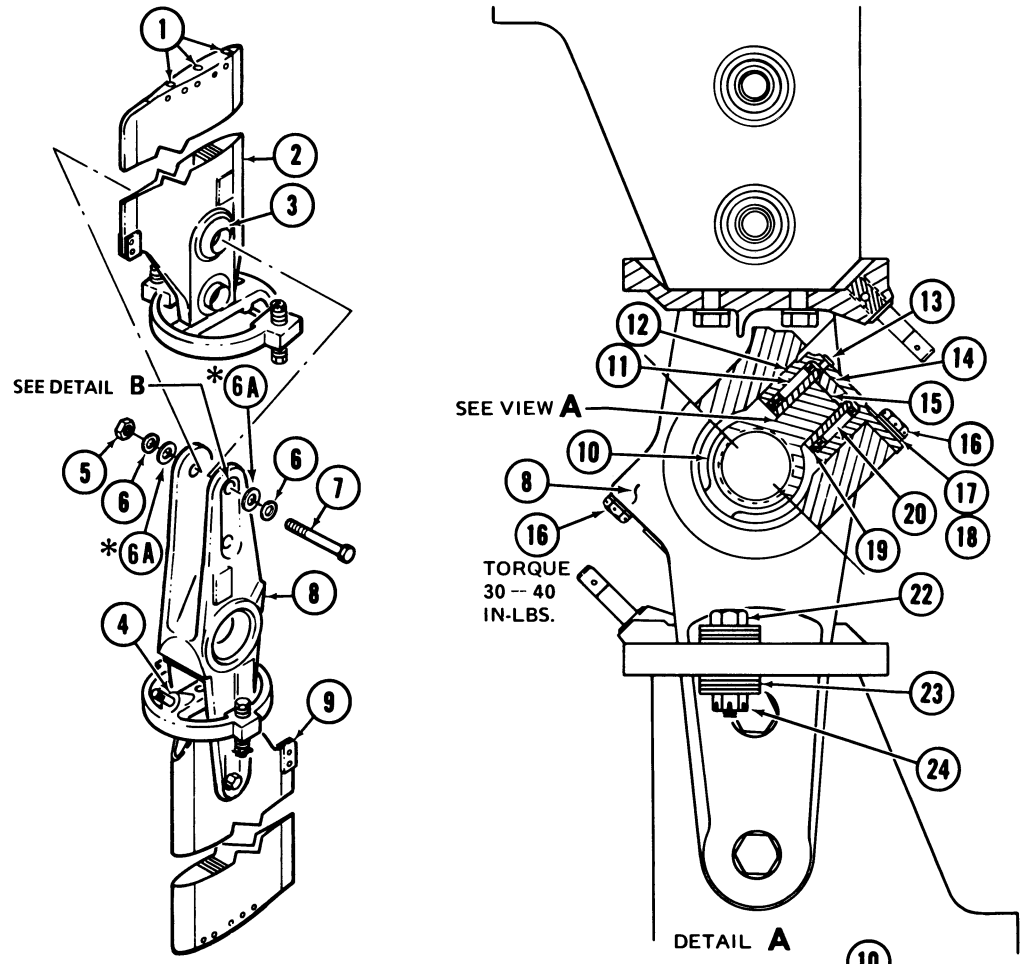

1. Weights (nonadjustable
2. Tail Rotor Blade
3. Spherical Bearing
4. Pitch Horn
5. Nut
6. Washer
*6A. Washers
7. Bolt
8. Yoke
9. Balance Weight
10. Trunnion
11. Bearing
12. Bearing Housing
13. Grease Fitting
14. Thrust Plug
15. Shim
16. Bolt
17. Washers (as required)
18. Weight (as required)
19. Seal
20. Bearing Race
21. Sealant
22. Bolt
23. Washer
24. Nut

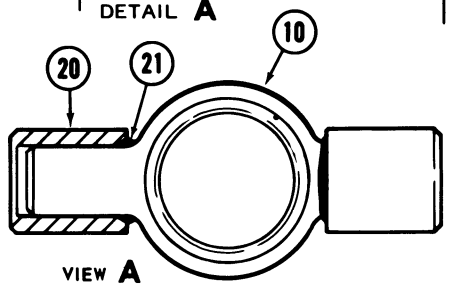

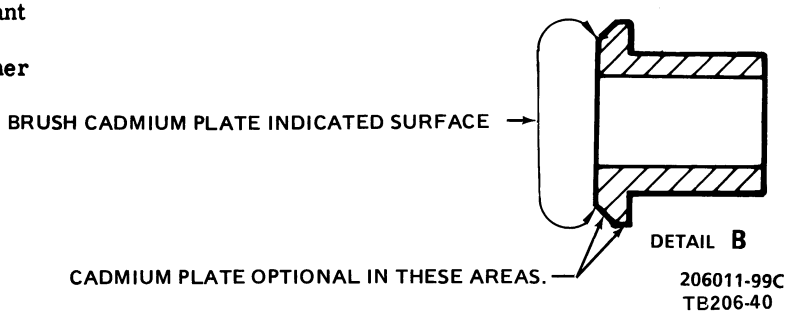

*MS9482-12 WASHERS ARE USED WHEN P/N 206-016-201-103 BLADES ARE INSTALLED.

Figure 3-3. Tail Rotor Hub and Blade Assembly (206-011-810)

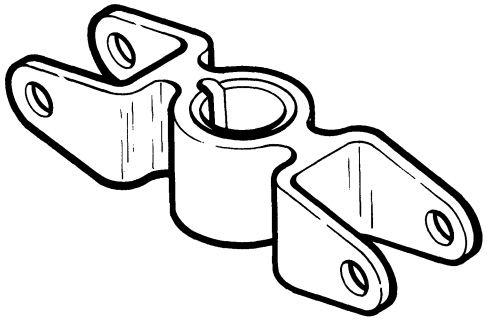

206-010-741 CROSSHEAD

DAMAGE LOCATION SYMBOLS

TYPE OF DAMAGE	MAXIMUM DAMAGE AND REPAIR DEPTH
MECHANICAL AND CORROSION	0.010 in. before and after repair
MAXIMUM AREA PER FULL DEPTH REPAIR	0.10 sq. in.
NUMBER OF REPAIRS	Two
EDGE CHAMFER	0.020 in.
BORES	0.001 in. for 1/4 circumference

206010-116A

Figure 3-4. Tail Rotor Crosshead — Damage Limits

(c) Support the flat portion of bearing housing (12) (grease fitting side) on a suitable flat surface. Position housing so that grease fitting (13) is off edge of surface and will not be damaged.

(d) Insert the fabricated plug into bearing, then strike the plug a sharp blow with a hammer. This will start the bearing (11) moving out of housing. Replenish grease as required so that the plug will not contact the bearing housing base.

(7) Remove bearing race (20) from trunnion (10), using a two-jawed puller.

(8) Repeat steps (6) and (7) on opposite end of trunnion.

d. Install serviceable trunnion bearings (11) and seals (19) as follows:

(1) Press bearing (11) into bearing housing (12). Press against markings on end of bearing until outer edge of bearing is 0.150 inch below edge of bearing housing.

(2) Press seal (19) into bearing housing (12) with lip of seal facing inboard as installed on hub.

(3) Repeat steps (1) and (2) to install bearing and seal in opposite bearing housing.

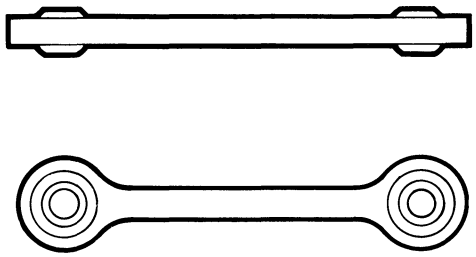

206-010-710 PITCHLINK

DAMAGE LOCATION SYMBOLS

TYPE OF DAMAGE	MAXIMUM DAMAGE AND REPAIR DEPTH
MECHANICAL	0.010 in. before and after repair
CORROSION	0.005 in. before and 0.010 in. after repair
MAXIMUM AREA PER FULL DEPTH REPAIR	0.04 sq. in.
NUMBER OF REPAIRS	Two - not adjacent
EDGE CHAMFER	0.030 in.

206010-117

Figure 3-5. Tail Rotor Pitch Link — Damage Limits

e. Install bearing races (20) as follows:

Note

To aid in installing bearing races (20), locally fabricate two trunnion bearing race plugs and a trunnion centering shaft. (See figure 1-13 .)

(1) Install fabricated trunnion centering shaft into trunnion to prevent distortion when pressing bearing race onto trunnion spindle.

(2) Apply a film of lubricating oil (item 50) to spindles of trunnion (10, figure 3-3) and inner races (20). Apply a heat lamp to inner races until heated. Position bearing race (20) on trunnion spindle with large chamfered inner surface of race facing inboard. (See view A.)

(3) Press bearing race (20) part way onto trunnion spindle. Remove from press and install locally fabricated plug into bearing race. Press bearing race onto trunnion spindle until outboard edge of race is flush with plug.

Note

Dimension from end of trunnion spindle to outboard edge of bearing race must be 0.128 to 0.138 inches.

(4) Reverse trunnion and leave bearing race plug in place to prevent installed bearing race from moving while installing opposite bearing race.

(5) Using second bearing race plug as a guide, press opposite bearing race on trunnion spindle as outlined in steps (1) through (3).

(6) Clean inboard chamfered edges of bearing races (20) and trunnion spindle with naphtha (item 36, table 1-1). Wipe dry with clean dry cloth before evaporation of naphtha.

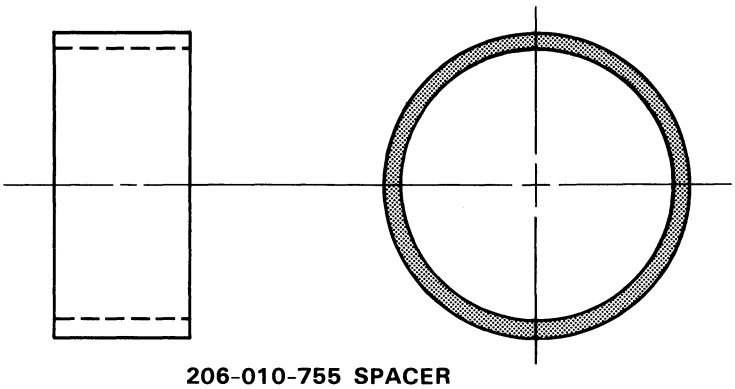

206-010-755 SPACER

DAMAGE LOCATION SYMBOLS

TYPE OF DAMAGE	MAXIMUM DAMAGE AND REPAIR DEPTH	
MECHANICAL AND CORROSION	0.010 in.	0.010 in.
MAXIMUM AREA PER FULL DEPTH REPAIR	0.2 in.	1/4 circumference
NUMBER OF REPAIRS	Three	Not critical
EDGE CHAMFER	0.015 in.	0.015 in.
BORES	———	———

206011-126

Figure 3-6. Tail Rotor Spacer, Static Stop and Knurled Nut — Damage Limits (Sheet 1 of 3)

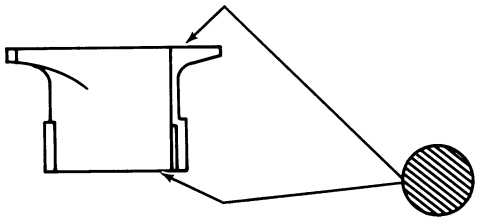

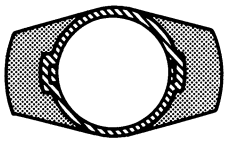

206-010-742-3 STATIC STOP

DAMAGE LOCATION SYMBOLS

TYPE OF DAMAGE	MAXIMUM DAMAGE AND REPAIR DEPTH		
MECHANICAL AND CORROSION	0.005 in.	0.010 in.	0.010 in.
MAXIMUM AREA PER FULL DEPTH REPAIR	Not critical	Not critical	1/4 circumference
NUMBER OF REPAIRS	Not critical	Not critical	Not critical
EDGE CHAMFER	0.020 in. x 45°	0.020 in.	———
BORES	0.005 inch for 1/4 circumference		

206011-127

Figure 3-6. Tail Rotor Spacer, Static Stop and Knurled Nut — Damage Limits (Sheet 2 of 3)

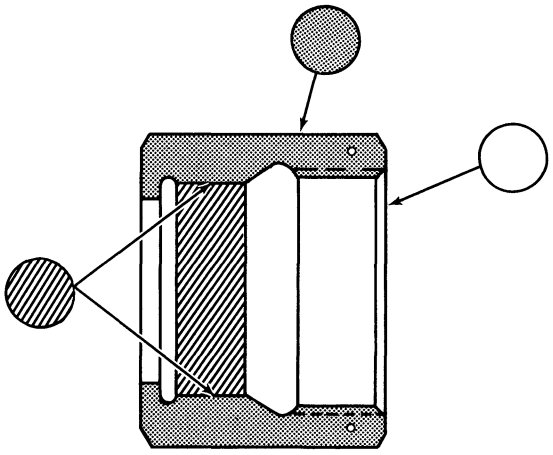

206-010-759 NUT

DAMAGE LOCATION SYMBOLS

TYPE OF DAMAGE	MAXIMUM DAMAGE AND REPAIR DEPTH	
MECHANICAL AND CORROSION	0.020 in.	0.020 in below depth of knurl
MAXIMUM AREA PER FULL DEPTH REPAIR	Not critical	Not critical
NUMBER OF REPAIRS	Not critical	Not critical
EDGE CHAMFER	0.030 in.	0.030 in.
BORES	0.010 inch for 1/4 circumference	
THREADS:		
DEPTH:	1/3 of thread	
LENGTH:	1/4 inch	
NUMBER:	Two	

206011-128

Figure 3-6. Tail Rotor Spacer, Static Stop and Knurled Nut — Damage Limits (Sheet 3 of 3)

(7) Apply a fillet of sealant (item 7) around trunnion spindle to fill void between trunnion (10) and chamfered edge of bearing races (20). (See view A.)

(8) Cure sealant at 150°F (66°C) for 3 hours prior to further assembly.

f. Install trunnion (10) in yoke (8) as follows:

Note

To aid in centering trunnion (10) in yoke (8) use fabricated trunnion centering shaft. (See figure 1-13 .)

(1) Install trunnion (10, figure 3-3) into yoke (8).

(2) Position thrust plug (14) and shims (15) into each bearing housing (12). Apply corrosion preventive compound (24, table 1-1) to faying surfaces of yoke and housing during final assembly. Install bearing housings on each end of trunnion.

(3) Install fabricated trunnion centering shaft into trunnion (10) and yoke (8). Secure trunnion centering tool with a washer (AN970-5) and a bolt (AN5-4A).

(4) Establish a pinch fit on trunnion (10) by adding shims (15) as required to obtain a 0.000 to 0.002 inch gap between the underside of bearing housing flange and mating surface of yoke (8), both sides.

(5) Install washers (17), weights (18), and bolts (16). Tighten bolts (16) to a torque of 30 to 40 inch-pounds. Bolts to be safetied after balancing.

(6) Lubricate bearings at grease fitting (13) with grease (item 82) until grease can be seen coming from seals (19).

g. Install tail rotor blades. (Refer to paragraph 3-10.)

h. Balance tail rotor hub and blade assembly. (Refer to paragraph 3-11 .)

3-8. REPAIR — TAIL ROTOR PITCH CHANGE MECHANISM. (Refer to Section IV.)

3-9. INSPECTION AND REPAIR — TAIL ROTOR BLADES. (Refer to Section III.)

3-10. INSTALLATION — TAIL ROTOR BLADES.

Note

The following installation instructions are applicable for P/N 206-016-201-103 tail rotor blades as used on 206A and B helicopters. Blades must be installed in sets which have common part numbers and dash numbers.

a. If not previously accomplished, install pitch horns (4, figure 3-3) on blades as follows:

Note

Pitch horn P/N 206-011-809-5 must be used with the P/N 206-011-810-121 hub and blade assembly.

(1) Install bolts, with washers attached, through pitch horn. Do not install pitch horn on blade until step (4) below is accomplished.

(2) Apply brush cadmium solution (item 58) to the flat face surface of bushing in yoke (8) that contacts bearing (3).

Note

Polyamide epoxy primer (item 56) may be used in lieu of brush cadmium plate as an interim until brush cadmium is available.

(3) Prior to installing blade (2) into yoke (8), apply corrosion preventive compound, grade 2 (item 24A) to I.D. of inner race of bearing (3).

(4) Fill the area of the pitch horn that mates the blade with sealant (item 7).

(5) Install pitch horn on blade (with pitch link attaching stud facing toward leading edge of blade as shown in figure 3-3) and secure with two (20-057-4-24) bolts and washers. Torque bolts 30 to 40 inch-pounds and safety bolt heads together with 0.032 inch lockwire (item 19).

CAUTION

Retorque pitch horn attaching bolts 30 to 40 inch-pounds, one hour after initial pitch horn installation to ensure adequate torque prior to cure of sealant.

(6) Apply a smooth coat of sealant (item 7), to any remaining unpainted surfaces of blade butt and blend into the squeezed out sealant around pitch horn.

(7) Repeat steps (1) through (6) for opposite blade.

Note

Due to manufacturing processes the yoke tangs may be arched open or closed and be acceptable. If they are closed they may be opened, to accept the blade by inserting a smooth rounded end 0.375 inch diameter rod into each outboard bushing. Apply sufficient force to open the tangs wide enough to accept the blade.

b. Position rotor blade (2) in yoke (8) with pitch horn adjacent to trunnion. Install two bolts (7), washers (6) or (6A), and nuts (5) as follows:

BOLT	WASHERS	NUTS
(Refer to No. 1.)	(Refer to Note 2.)	(Refer to Note 3.)
20-057-6-31		MS21042L6
20-057-6-32		MS21042L6
20-057-6-34		MS21042L6
20-057-6-36	(Refer to Note 2.)	MS21042L6

Note 1. Length of bolts determined by combination of washers required and quantity required for spanwise balance.

Note 2. Washers (AN960-616, AN960-616L and AN970-6) are used in combination as required for spanwise balance. On P/N 206-016-201-103 blade installation, add one MS9482-12 washer (6A, figure 3-3) next to yoke (eight places).

Note 3. Torque (MS21042L6) nuts to specified torque plus friction drag of nut. (Refer to subparagraph c.)

c. Repeat procedure for opposite blade. Torque nuts (5) as follows if balancing is not required.

d. Balance tail rotor hub and blade assembly if required; due to blade repair, trunnion adjustment, or other causes which may have changed balance of the assembly. (Refer to paragraph 3-11 .)

TAIL ROTOR HUB AND BLADE ASSEMBLY		206-011-810
Specified Torque		150 to 176 Inch-Lbs
Torque Wrench/Friction Drag or Nut		9.5 to 80 Inch-Lbs
Final Torque Wrench Reading	Actual Tare Torque + Specified Value	

3-11. BALANCING — TAIL ROTOR HUB AND BLADE ASSEMBLY (206-011-810).

Note

To balance the tail rotor using MARVEL Mfg. Co. equipment refer to the appropriate MARVEL Mfg. Co. manual and bulletins.

Note

Rework (T101576-3) mandrel (11, figure 3-7) and fabricate (T101576-21) spacer before balancing. Reworking mandrel and fabricating spacer in accordance with figure 1-13 will reduce sensitivity during tail rotor hub and blade assembly balancing.

a. Level and check balance of tail rotor balancing tools as follows:

(1) Place stand (12) on a stable support stand or work bench in a draft free room. The support stand must have a top constructed from material such as steel to prevent the legs of stand (12) from pressing in and causing a change in level. It is advisable to drill three small locating holes about 1/8 inch deep in the top of the support stand to set legs of stand (12). This will prevent shifting of stand and possible change in level. An alternate procedure is to make a pencil outline of the base of stand (12) on the support stand.

(2) Place plate (14) on top of stand (12). Place level (1) on plate (14). Adjust screws (13) in base of stand to level stand. Remove level and plate.

(3) Place spacer (10) and base (7) on mandrel (11). Place mandrel carefully on stand (12). Place plug (4) on mandrel; do not install screw and washer. Place level in recess on top of plug (4) and check to see if the assembly is in balance. If assembly is not in balance, lay small washers in base (7) to attain balance. When assembly is balanced, attach washers to lower surface of base (7) with masking tape and recheck balance.

CAUTION

Ensure (T101576-21) spacer, (MS134366) ball, and (MS29561-113) packing are installed in (T101576-3) mandrel. (See detail A.) Carefully place mandrel (11) on stand assembly (12) to prevent damage to spacer, ball, and packing.

(4) Remove level, plug and mandrel from stand.

b. Prior to balance, install four washers (AN970-3) (23, figure 3-3) on each side of pitch horn (4) (maximum 16 per pitch horn).

Note

Do not add or remove washers to balance tail rotor hub and blade assembly. Washers are used to achieve rudder pedal balance if determined to be necessary by flight test. Quantity and type of washers must be same on all pitch horn lugs. Select NAS 1303-13D thru NAS 1303-17D bolts as necessary to insure minimum thread engagement of 0.250 inch.

c. Balance the tail rotor assembly chordwise as follows:

(1) Place spacer (10, figure 3-7) on mandrel (11).

(2) Place base (7) on spacer.

(3) Place tail rotor assembly on base.

(4) Place plug (4) on tail rotor and secure with screw (2) and washer (3).

(5) Install adapter (T101571) on pitch horn studs; then position locks (6) in rotor blade pitch horns and secure locks to base (7) with screws (9) and washers (8).

(6) Tighten screws (2) and (9).

(7) Carefully place tail rotor assembly on stand to prevent damage to ball in mandrel.

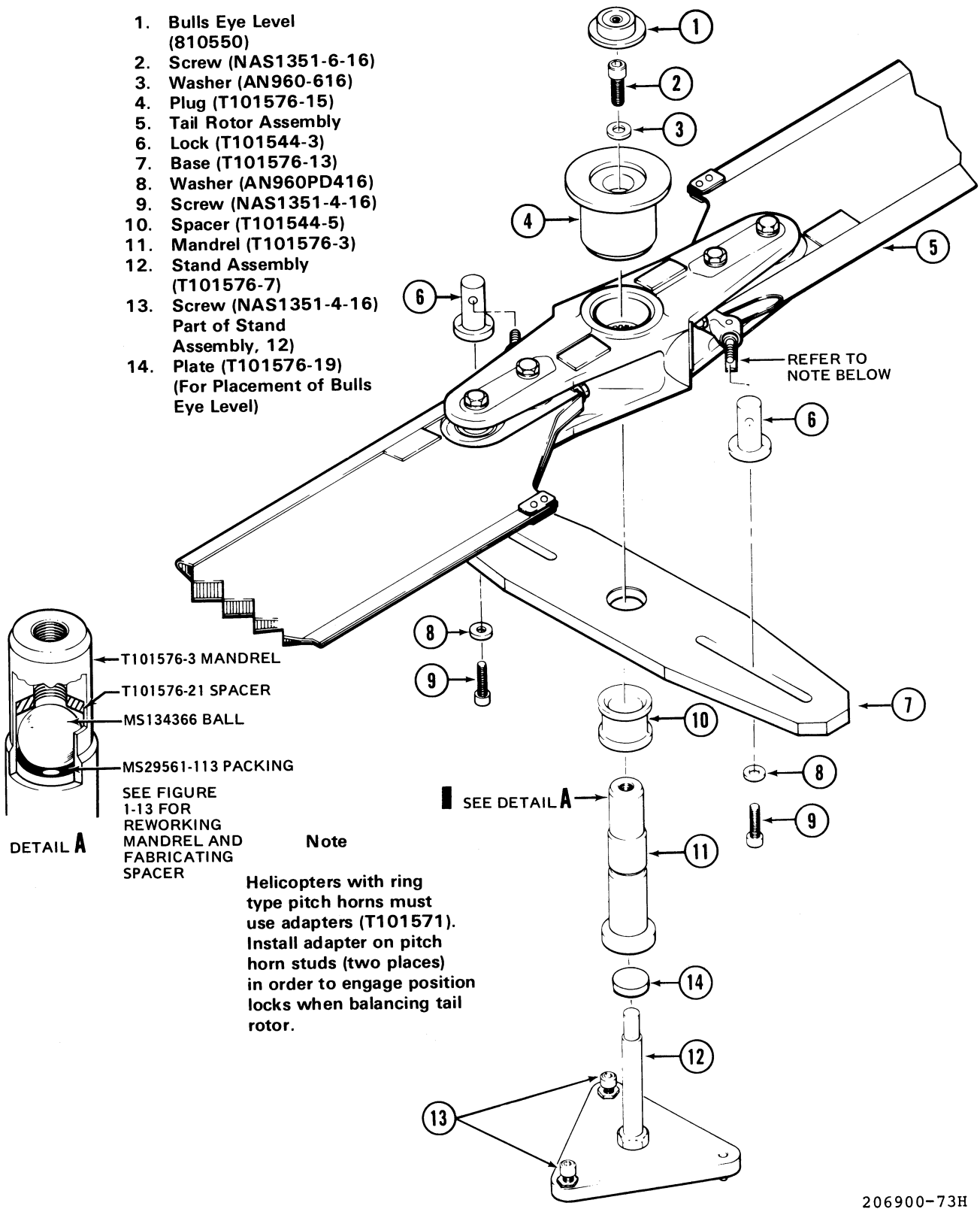

Figure 3-7. Tail Rotor Balancing — Tool Application

(8) Place bulls eye level (1) and plug (4) and check chordwise balance. Ensure that mandrel is centered on stand.

(9) Use combinations of weights (47-641-191-1) (18, figure 3-3) and washers (AN960-416 or AN960-416L) (17) as necessary to obtain chordwise balance.

Note

Select bolts (NAS 1304-2H thru NAS 1304-8H) to ensure a minimum thread engagement of 0.250 inch.

Note

Adjustment of chordwise balance will also affect spanwise balance. If necessary, temporarily place washers on yoke to balance spanwise so that accurate chordwise readings may be obtained.

d. Balance the tail rotor assembly spanwise as follows:

(1) Place the tail rotor assembly on the balance stand as described for chordwise balance in step c.

(2) Balance assembly spanwise by using combinations of washers (AN960-616, AN960-616L, and AN970-6) on bolts (7). Inboard bolts may be (20-057-6-34) (minimum length) through (20-057-6-36) (maximum length) to accommodate washers. Outboard bolts may be (20-057-6-34) (minimum) through (20-057-6-40) (maximum length) to accommodate washers.

CAUTION

Remove tail rotor assembly from balance stand (12, figure 3-7) to install washers and/or larger bolts to preclude damage to stand or ball in mandrel (11). Balancing should be obtained by placing balance washers on outboard bolt. If more washers are required, additional washers may be added to inboard bolt. Assure minimum length of inboard bolt is used to preclude interference between bolt and pedal balance washers and bolt.

(3) Remove balancing tools from tail rotor assembly.

Note

Do not rotate trunnion 180 degrees after static balance procedures. The balance and trunnion centering will likely not be the same due to manufacturing tolerances of the trunnion.

(4) Torque nut (5, figure 3-3) 150 to 175 inch-pounds plus friction drag of nut.

3-12. INSTALLATION — TAIL ROTOR HUB AND BLADE INSTALLATION (206-011-700).

a. Install spacer (4, figure 3-1) against shoulder on tail rotor drive shaft. Align pin hole in drive shaft, slot in pitch change shaft (control tube, 3), and hole in key (2); install pin (1).

CAUTION

Ensure that pin (1) goes through hole in key (2) and remains in position until tail rotor assembly and static stop are positioned on tail rotor shaft (25).

Note

Do not bend lock washer (10), install safety wire or cotter keys until completion of subparagraph d. following flapping angle correction.

b. Align splines and position tail rotor assembly on tail rotor shaft (25) with leading edge of top blade facing aft. Install shim (7) static stop (9), new washer (10), and nut (11). Torque nut 45 to 50 foot-pounds. Do not install rubber bumper (8) or bend lockwasher (10) at this time.

c. After tail rotor has been rigged, check for correct rotor flapping angle as follows:

(1) Place tail rotor blades in vertical position, move rubber bumper (8) outboard over static stop, and check flapping angle along pitch change axis. The pitch change axis is an extension of a line through the centers of the blade to yoke attachment bolts (7, figure 3-3). Flap tail rotor to one

extreme position until yoke contacts static stop (9, figure 3-1). Place protractor on blade-to-yoke attachment bolts and record angle. Flap tail rotor to opposite extreme position until yoke contacts static stop; measure and record angle. The total flapping angle must be 12-degrees plus or minus 1 degree. If angle is not within tolerance, refer to step (2).

(2) If necessary to obtain 12-degrees plus or minus 1 degree or 1.0 inch noted in steps (1), adjust thickness of shim (7).

Note

Use only bonded laminates of shim (7). If a thicker shim is required, use a new shim.

(3) Install rubber bumper (8) between static stop and yoke.

d. When 12-degrees plus or minus 1 degree and 1.0 inch tolerances noted in subparagraph c. have been attained, safety the installation. Bend edge of washer (10) inboard over one flat of static stop (9). Bend edge of washer (10), at another location, outboard over two flats of nut (11). (See detail A.) Safety nut (24) with 0.032 inch lockwire (item 19) to washer (10).

e. Install liner (12) and knurled nut (24). Tighten nut hand tight.

f. Check pitch change mechanism for freedom of movement through operating range.

g. Check tail rotor assembly for freedom of movement on flapping axis. Check each rotor blade for freedom of movement on pitch change spherical bearings.

h. Install pin (22) in pitch change shaft and install crosshead (23) over shaft and pin. Check for proper location of pin by inserting piece of lockwire into groove at back of crosshead. Secure crosshead with washer (21) and nut (20). Torque nut 100 to 150 inch-pounds plus friction drag of nut.

i. Install pitch change links between blade pitch horns and crosshead. Secure with washers and nuts. Install cupped washer (16) between nut and pitch link at blade pitch horn. Torque nut (17) 50 to 70 inch-pounds plus friction drag of nut. Check pitch links for freedom of movement on bearings. Install cotter pins in nuts (17 and 19) to secure pitch links (13).

j. Check rigging of anti-torque control system. (Refer to Section IV.)

k. Check tail rotor hub and blades for correct tailboom clearance as follows:

(1) Turn tail rotor hub and blade to position one blade tip adjacent to tailboom. Hold right tail rotor pedal full forward against stop. Flap tail rotor hub and blade toward tailboom until tail rotor hub contacts static stop (9).

Note

The trailing edge of the tail rotor blade must clear the tailboom at closest point by at least 1.00 inch.

(2) If clearance is not within tolerance, accomplish the following steps:

(a) Remove items installed in steps d. through i.

(b) Accomplish procedures specified in step c.(1) through c.(2). Adjust shim to minimum of 18 degree flap.

(c) Install items specified in steps d. through i.

(d) Accomplish steps k.(1) through k.(2).

l. Bend one edge of special washer (10) inboard over one flat of static stop. At another location, bend one edge of special washer (10) outboard over two flats of nut (11) as shown on detail A.

m. Position rubber bumper (8) between tail rotor hub and flanges of static stop (9).

n. Install knurled nut (24), liner (12). Safety nut (24) with 0.32 inch lockwire (item 19).

3-13. INSTALLATION — TAIL ROTOR HUB AND BLADES (206-011-720, and 206-011-810).

a. Install spacer (17, figure 3-2) against shoulder on gearbox shaft (18).

CAUTION

Ensure that pin (15) goes through hole in key (16) and remains in position until rotor hub and blade (19) and static stop (12) are positioned on driveshaft.

b. Align pin hole in gearbox shaft with slot in control tube (7) and install key (16) and pin (15).

c. Align splines in gearbox shaft (18) and tail rotor hub and blade (19). Install tail rotor hub on gearbox shaft with leading edge of top tail rotor blade facing aft.

d. Install shim (14) static stop (12) special washer (10) and nut (11). Torque nut (11) 580 inch-pounds.

Note

Do not bend special washer (10) until correct flapping angle and tail boom clearance has been obtained.

e. Adjust tail rotor hub and blade (19) for correct flapping angle as follows:

(1) Position tail rotor hub and blade (19) in vertical position and check flapping angle along pitch change axis. The pitch change axis is an extension of a line through the centers of the tail rotor blades to the attachment bolts.

(2) Flap tail rotor hub and blade (19) to one extreme position until tail rotor hub contacts static stop (12). Place protractor adjacent to blade attachment bolts and record angle. Flap tail rotor hub and blade (19) to opposite extreme position until tail rotor hub contacts static stop (12); measure and record angle.

(3) Total flapping angle must be within the limits shown in Table 3-1 for the particular parts installed; if not, refer to step e.(4).

(4) Turn tail rotor hub and blade to position one blade tip adjacent to tailboom. Hold right tail rotor pedal full forward against stop. Flap tail rotor blade toward tailboom until tail rotor hub contacts static stop.

(5) The trailing edge of the tail rotor blade must clear tailboom at closest point by at least 1.0 inch. If clearance is not within tolerance refer to step (4).

CAUTION

The long stainless steel tail rotor blades P/N 206-016-201-001 are not authorized for installation on helicopters S/N 4 through 497. On helicopters S/N 498 through 2211, blades may be installed during compliance with Service Instruction No. 206-112.

(6) If angle is not within tolerance accomplish the following steps:

(a) Remove nut (11), special washer (10) and static stop (12).

(b) Adjust thickness of shim (14), as required. If a thicker shim is required, use a new shim. Laminates of shim are 0.002 inch.

(c) Install shim (14), static stop (12), special washer (10), and nut (11). Torque nut 580 inch-pounds.

(d) Accomplish steps e.(1) through e.(3).

Table 3-1. Tail Rotor Installation

Total Flapping Angle Limits	T/R Hub P/N	T/R Blade P/N	Static Stop P/N
18° to 19°	206-011-810-015	206-016-201-001	206-010-742-003
11° to 13°	206-011-810-015	206-016-201-103	206-010-742-001

f. If flapping angle is within tolerance temporarily install rubber bumper (13) over nut (11).

CAUTION

Exceeding torque of 50 inch-pounds will strip the threads in the balance wheel.

g. Thread balance wheel (26) onto tail rotor gearbox shaft against nut (11). Torque balance wheel to a maximum of 50 inch-pounds.

h. Install liner (9) and knurled nut (8), and hand tighten onto gearbox shaft. Adjust shim (25) clearance as follows:

(1) Measure the clearance between the balance wheel (26) and the knurled nut (8). Record measured clearance.

(2) Adjust thickness of shim (25) to equal measured clearance to within 0.002 inch. Shims (25) are 0.002 inch laminates with total thickness of 0.032 inch. Do not exceed a maximum of 10 shims.

(3) Install measured shims (25) liner (9) and knurled nut (8). Tighten knurled nut (8) hand tight on gearbox shaft.

i. Install pin (6) in outboard end of control tube (7), and install crosshead (5) over control tube (7) and pin (6). Check for proper location of pin (6) by inserting a piece of lockwire into groove at back of crosshead (5).

j. Install washer (4) and nut (3) on outboard end of control tube (7). Torque nut (3) 125 inch-pounds.

k. Install pitch change links (1) between crosshead (5) and studs on pitch horn (2) as follows:

(1) Connect pitch change links (1) to pitch horns (2) with thin washers (24A), cupped washers (24) and nuts (23). Torque nut (23) 50 to 60 inch-pounds.

(2) Connect pitch change links (1) to crosshead (5) with bolts (20) (heads in direction of rotation) washers (21) and nuts (22). Position washers under head of bolts and under nuts. Torque nut (22) 80 to 100 inch-pounds.

l. Check pitch change mechanism for freedom of movement with pedals through full operating range.

m. Check tail rotor hub and blades (19) for freedom of movement at flapping axis. Check tail rotor blade bearings for freedom of movement.

n. Check rigging of anti-torque control system. (Refer to Section IV .)

o. Check tail rotor hub and blades for correct tailboom clearance as follows:

(1) Turn tail rotor hub and blade (19) to position one blade tip adjacent to tailboom. Hold right tail rotor pedal full forward against stop. Flap tail rotor hub and blade (19) toward tailboom until tail rotor hub contacts static stop (12).

(2) The trailing edge of the tail rotor blade must clear the tailboom at closest point by at least 1.0 inch.

(3) If clearance is not within tolerance, accomplish the following steps:

(a) Remove items installed in steps f. through k.

(b) Accomplish procedures specified in step e.(4). Adjust shim to minimum flap angle of step e.(3).

(c) Install items specified in steps f. through k.

(d) Accomplish steps o.(1) through o.(3).

p. Bend one edge of special washer (10) inboard over one flat of static stop. At another location, bend one edge of special washer (10) outboard over two flats of nut (11) as shown on detail A.

q. Position rubber bumper (13) between tail rotor hub and flanges of static stop (12).

r. Secure knurled nut (8) to balance wheel (26) and then secure balance wheel to special washer (10) with lockwire (item 19).

3-14. DYNAMIC BALANCE — TAIL ROTOR HUB AND BLADE INSTALLATION.

Balance wheel (26, figure 3-2) is installed on all tail rotor hub and blade installations to dynamic blade assembly at operating rpm.

Note

The tail rotor hub and blade assembly must be statically balanced prior to installation on the helicopter. The balance wheel (26) is installed to permit dynamic balancing of the assembly on the helicopter when a high frequency vibration is found to exist, and it is known that the hub and blade assembly is serviceable and is statically balanced.

When balancing is completed there can be a bolt, washers and nut installed in both the spanwise and chordwise directions.

To balance the tail rotor using MARVEL Mfg. Co. equipment, refer to MARVEL Mfg. Co. manual and bulletins.

a. Spanwise Balancing.

(1) Observe the amount of vibration at the pedals and horizontal stabilizer at 96 to 100 percent N2, flat pitch for reference.

(2) Place a 2 inch strip of 1 inch wide masking tape (item 75, table 1-1) near the tip of one blade (30 inches from center line of hub) and compare the vibration.

If vibration is not reduced by the first 2 inch strip of masking tape, remove the tape and perform the same procedure on the opposite blade.

(3) If vibration is reduced but not acceptable, try a 4, 6, 8 or 10 inch strip of masking tape until vibration is reduced to its minimum.

(4) Install a bolt (27), washers (28 and 29), and nut (30) in the balance wheel (26) hole aligned spanwise (lengthwise) with the blade. (See detail B.)

Note

Washers (28) are to be installed under both the bolt head (27) and nut (30).

Washers (29) should be placed alternately on either side of the balance wheel (26).

The combination of bolt, washers, and nut is to equal the same inch/gram imbalance as that exerted by the tape on the rotor. (Refer to table 3-2)

b. Chordwise Balancing.

(1) Observe the amount of vibration at the pedals and horizontal stabilizer at 96 to 100 percent N2 for reference.

(2) Install a bolt (27), two washers (28) and a nut (30) in one of the balance wheel (26) holes aligned chordwise (fore and aft) with the rotor blades and compare the vibration. If vibration is not reduced, remove the bolt, washers, and nut and perform the same procedure using the opposite hole in the balance wheel.

Note

Washers (28) are to be installed under both the bolt head (27) and nut (30).

Washers (29) should be placed alternately on either side of the balance wheel (26).

Table 3-2. Balance Weight Conversion

ITEM NO.	NOMENCLATURE	WEIGHT	ARM	UNBALANCE
1	Masking, Tape, 1 inch wide			
	a. 2 inch length	0.18 gm	30 inch	5.4 in/gm
	b. 4 inch length	0.36 gm	30 inch	10.8 in/gm
	c. 6 inch length	0.54 gm	30 inch	16.2 in/gm

Table 3-2. Balance Weight Conversion (Cont)

ITEM NO.	NOMENCLATURE	WEIGHT	ARM	UNBALANCE
2	AN3-3A Bolt	2.95 gm	1.25 inch	3.7 in/gm
3	NAS679A3 nut or MS21042 nut	1.27 gm	1.25 inch	1.6 in/gm
4	AN960-10 washer	0.9 gm	1.25 inch	1.1 in/gm
5	AN970-3 washer	5.0 gm	1.25 inch	6.2 in/gm

Part 3
Overhaul — Tail Rotor Hub Assembly (206-011-810)

Note

Screen records and retire those components which have accumulated maximum operating time or will accumulate maximum operating time before next scheduled overhaul. (Refer to Section I , AIRWORTHINESS LIMITATIONS SCHEDULE.)

Note

Limits Charts, listing critical dimensions of parts, are provided as a convenience in determining closeness of fit between mating parts. They also provide replacement dimensions as a guide for replacement of worn parts. It is not intended that all dimensions listed on Limits Charts are to be checked out as a prescribed overhaul procedure. Parts that give evidence of wear or physical damage will be checked dimensionally.

Note

For consumable materials item numbers, refer to Section I , CONSUMABLE MATERIALS, Table 1-1 .

3-15. TAIL ROTOR HUB (206-011-810) OVERHAUL.

3-16. DISASSEMBLY.

a. Remove tail rotor blades (19, figure 3-8) by removing nuts (18), washers (17), weight if installed and bolts (16). Inspect, repair, and refinish blade in accordance with Part 5.

b. Remove bolts (12), washers (13), weights (14). Weights (14) were selected for balance, tag and secure for reinstallation in the same location.

c. Remove housing (10) from yoke (1). Thrust plug (4) and shims (5) may remain in housing or on end of trunnion (7), remove plug and shim.

d. Remove trunnion (7) from yoke, and thrust plug (4) and shims (5) from opposite end of trunnion.

e. Remove bolts (12), washer (13), weights (14) and housing (10) from opposite side of yoke (1).

f. Remove seals (8) and bearings (9) from housings (10) as follows:

(1) Fabricate a steel plug 0.750 inch diameter by 4 to 5 inches long, ends must be square in relation to the shank of the plug.

(2) Fill the bearing housing (10) cavity approximately one-half full with a high viscosity grease (item 82, table 1-1).

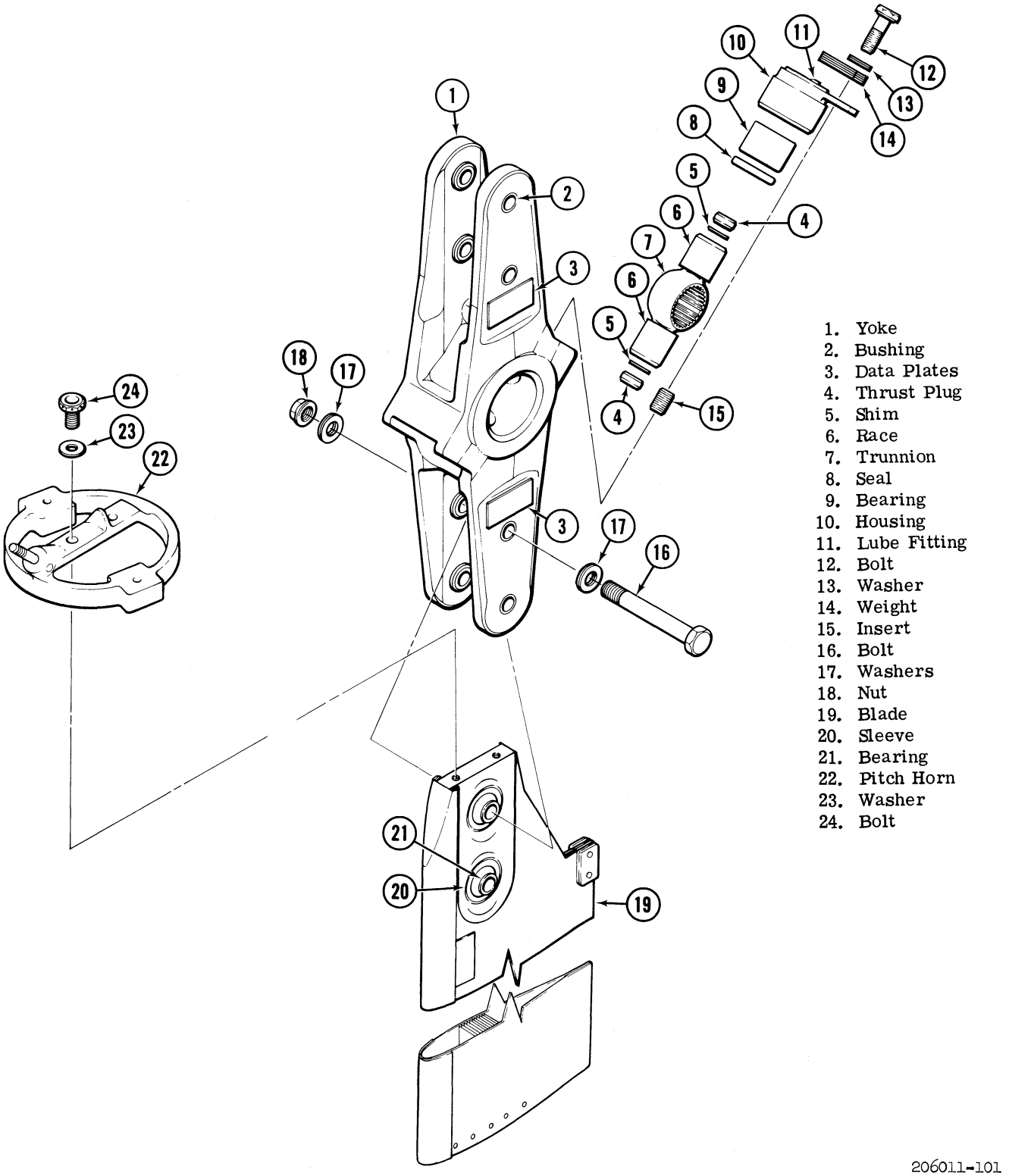

Figure 3-8. Tail Rotor Hub Assembly (206-011-810)

(3) Support the flat portion of bearing housing on a suitable work bench. Dimple top of work bench to accept protruding lube fitting, but still maintaining pressure on lube fitting. This will prevent the possibility of blowing lube fitting out of housing while removing the bearing with grease.

(4) Insert the fabricated plug into bearing, then strike the plug a sharp blow with a hammer, this will start the bearing moving out of housing. Replenish grease as required so that plug will not hit against the bearing housing base.

g. Remove bearing races (6) from trunnion (7) using a two-jawed puller. Discard races.

3-17. CLEANING. Clean all parts with cleaning solvent (item 12, table 1-1). Dry with filtered compressed air.

3-18. INSPECTION. Inspect the hub in a well lighted area. During inspection, maintain a record of the condition of all parts. Replace parts that exceed inspection limits and parts for which fatigue life (per Airworthiness Limitations Schedule) determines replacement.

a. If accompanying records and/or physical appearance of component indicate that component has been subjected to sudden stoppage, scrap assembly.

b. Inspect all parts dimensionally in accordance with figure 3-9 .

c. Inspect yoke for mechanical and corrosion damage in accordance with figure 3-10 .

(1) Damage to trunnion bore shall not exceed 0.001 inch after clean-up.

(2) Dimensionally inspect ID of yoke bushings (eight locations). Replace bushing if ID is greater than 0.377 inch. Brush cadmium to repair bushing in accordance with **Section I**.

d. Inspect yoke housing for mechanical or corrosion damage in accordance with figure 3-11 .

e. Inspect trunnion for mechanical and corrosion damage in accordance with figure 3-12 .

f. Inspect pitch horn assembly for mechanical and corrosion damage in accordance with figure 3-13.

(1) Inspect pitch horn stud for burrs, damaged threads and for straightness. Ensure that the stud retaining pin is point staked adjacent to the pin hole.

(2) If stud is damaged beyond limits stated, replace pitch horn assembly.

(3) Polish out nicks, scratches, and gouges with fine india stone (item 95) and blend repair area into surrounding area.

g. Remove paint and primer from yoke using paint remover solvent (item 61).

h. Inspect tail rotor yoke, trunnion, and housing by Fluorescent Penetrant or Magnetic Particle method. (Refer to **Section I** SPECIAL INSPECTION - ACCEPTANCE STANDARDS.)

Note

Trunnion housing (5, figure 3-9) is epoxy resin coated. Do not remove coating for fluorescent penetrant inspection of steel housing.

3-19. REPAIR AND REPLACEMENT.

a. Replace parts that exceed inspection limits and parts for which retirement life requires replacement.

b. Install new data plate (3, figure 3-8) if required as follows:

(1) Abrade plate (3) and yoke (1) contacting surfaces lightly with 180 grit sandpaper (item 90).

(2) Clean plate and hub with methyl-ethyl-ketone (item 17) and clean cheesecloth. Wipe surfaces dry immediately with clean cheesecloth. Mask hub with masking tape (item 75) to within 1/16 inch of faying surface.

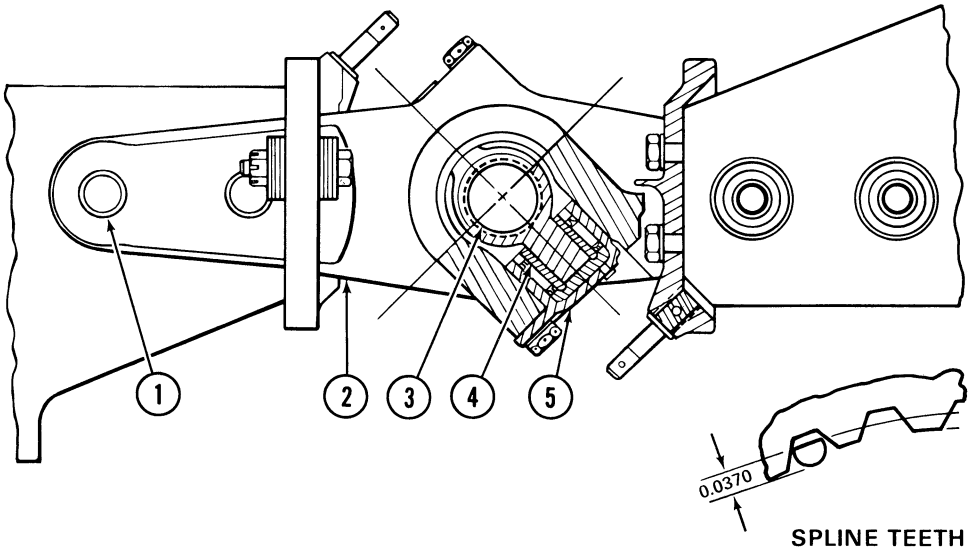

INDEX	NOMENCLATURE		MINIMUM	MAXIMUM
			INCHES	
1.	Yoke	ID	0.5000	0.5005
	Yoke Bushing (206-011-813)	ID	0.3750	0.377
2.	Yoke (206-011-811)	Bore	1.375	1.376
3.	Trunnion-Spline (206-011-812) (Between 0.0450 inch diameter pins) △1	ID	0.9520	0.9546
4.	Race (47-641-175)	OD	0.7495	0.7505
5.	Housing (206-011-814)	OD	1.373	1.374

△1 Use pins with one side ground flat to provide clearance between pins and root of spline teeth.

206011-102E

Figure 3-9. Tail Rotor Hub (206-011-810) — Limits Chart

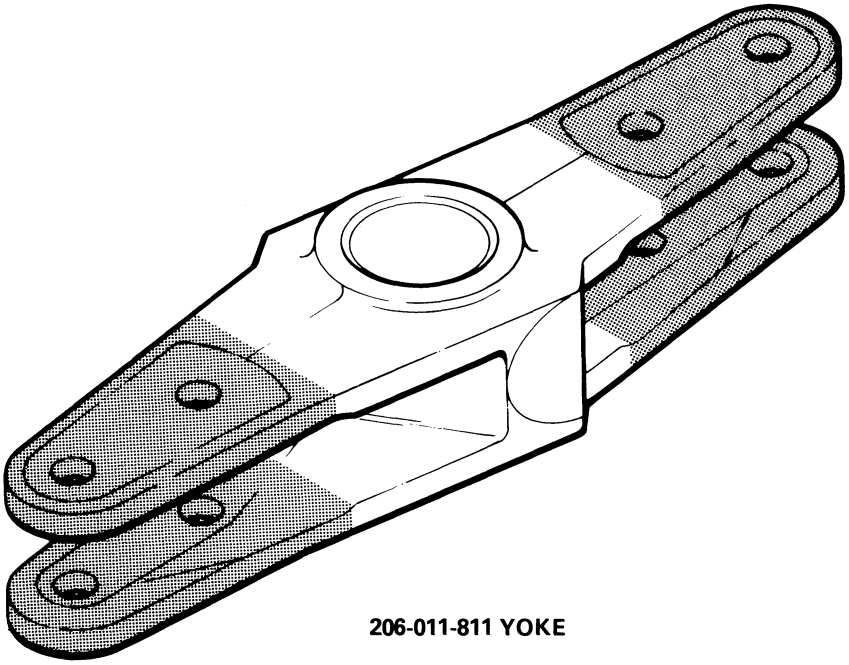

206-011-811 YOKE

DAMAGE LOCATION SYMBOLS

TYPE OF DAMAGE	MAXIMUM DAMAGE AND REPAIR DEPTH	
MECHANICAL	0.010 in. before and after repair	0.030 in. before and after repair
CORROSION	0.005 in. before and 0.010 in. after repair	0.015 in. before and 0.030 in. after repair
MAXIMUM AREA PER FULL DEPTH REPAIR	0.25 sq. in.	0.50 sq. in.
NUMBER OF REPAIRS	One per tang	Not critical
EDGE CHAMFER	0.030 in.	0.060 in.
BORES	0.001 in. for 1/4 circumference	
TRUNNION BORE	0.002 inch for 1/4 circumference	

206011-103A

Figure 3-10. Tail Rotor Yoke (206-011-811) — Damage Limits

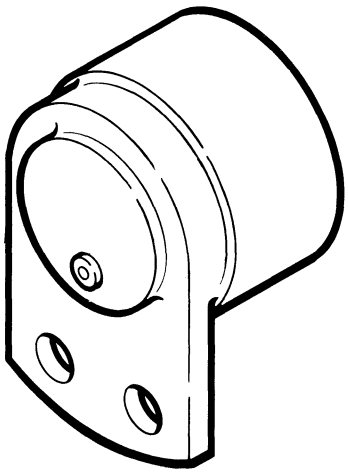

206-011-814 HOUSING

DAMAGE LOCATION SYMBOLS

TYPE OF DAMAGE	MAXIMUM DAMAGE AND REPAIR DEPTH
MECHANICAL AND CORROSION	0.010 in. before and after repair
MAXIMUM AREA PER FULL DEPTH REPAIR	0.20 sq. in.
NUMBER OF REPAIRS	Not critical
EDGE CHAMFER	0.020 in.
BORES	0.002 in. full circumference

206011-118A

Figure 3-11. Tail Rotor Yoke Housing — Damage Limits

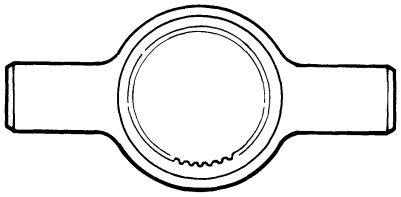

206-011-812 TRUNNION

DAMAGE LOCATION SYMBOLS

TYPE OF DAMAGE	MAXIMUM DAMAGE AND REPAIR DEPTH
MECHANICAL AND CORROSION	0.002 in. before and after repair
MAXIMUM AREA PER FULL DEPTH REPAIR	0.01 sq. in.
NUMBER OF REPAIRS	Two
EDGE CHAMFER	0.020 in.
SPLINES (1)	
Depth:	1/3 of spline
Length:	1/2 of spline
Number:	Three

NOTE:

(1) No pitting allowed on splines.

206011-232

Figure 3-12. Tail Rotor Tunnion (206-011-812) — Damage Limits

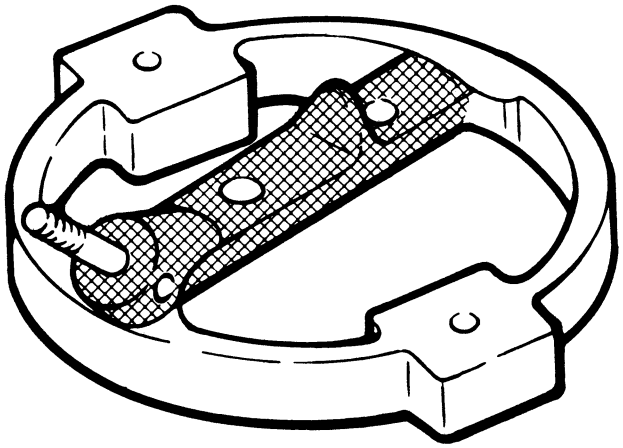

DAMAGE LOCATION SYMBOLS

TYPE OF DAMAGE	MAXIMUM DAMAGE AND REPAIR DEPTH	
MECHANICAL	0.010 in. before and after repair	0.030 in. before and after repair
CORROSION	0.010 in. before and after repair	0.030 in. before and after repair
MAXIMUM AREA PER FULL DEPTH REPAIR	0.10 sq. in.	Not critical
NUMBER OF REPAIRS	One	Not critical
EDGE CHAMFER	0.020 in.	0.040 in.
BORES	0.002 in. for one-four circumference	
THREAD		
Depth:	One third of thread	
Length:	one half of circumference	
Number:	One	

206011-100D

Figure 3-13. Tail Rotor Pitch Horn (206-011-809) — Damage Limits

WARNING

Avoid adhesive contact with skin. Wear white cotton gloves.

(3) Mix epoxy adhesive, (item 121) thoroughly. Apply adhesive to each surface. Pot life is 2 hours after mixing but adhesive should be used within 20 minutes.

Note

The maximum gap between data plate and contacting surface shall not exceed 0.015 inch.

(4) Position data plate and check that adhesive overlaps edge of data plate. Clamp data plate in place (5 to 15 PSI).

(5) Cure for 24 hours at 70° to 80°F (21° to 27°C) or 180° to 200°F (82° to 93°C) for 2 hours. During cure, check for edge voids and fill with adhesive if any are found. Remove masking tape and excess adhesive before adhesive sets.

(6) After cure, inspect for loose edges, edge voids and non-cure of adhesive.

c. Replace yoke bushings (2, figure 3-8) if fretting or corrosion or wear allowance is exceeded as follows:

(1) Support yoke tangs on a suitable support and press out bushings.

(2) Clean primer from bushing hole and apply unreduced epoxy polyamide primer (item 56) to hole in yoke and to OD of bushing. Install bushing while primer is wet (bushing flange inboard). Ensure that bushing flanges are fully seated.

(3) Insert gage blocks between yoke tangs to maintain 1.120 to 1.124 inch dimension between yoke tangs during reaming operation. Line ream bushings to 0.3750 to 0.3755 inch diameter. Insert a new (20-057-6) bolt through yoke bushings, bolt shall be free fitting. Remove gage blocks.

d. Repair mechanical or corrosion damage to yoke (1, figure 3-8 , housing (10), and trunnion (7) to limits. (See figures 3-9 through 3-12.)

e. Install new trunnion bearings (9, figure 3-8) and seals (8) as follows:

(1) Press bearing (9) into bearing housing (10), using suitable pressing plug. Press against markings on end of bearings until outer edge of bearing is 0.150 inch below face of housing.

(2) Press seal (8) into housing (10) with lip of seal facing inboard as installed in hub.

(3) Repeat steps (1) and (2) to install bearing and seal in opposite housing (10).

f. Install new bearing races (6) on trunnion (7) in accordance with paragraph 3-7e.

g. Touch-up paint finish on yoke (1) as follows:

(1) Apply one spray coat of super koropon primer (item 4) to yoke, omitting primer on name plate, yoke bores and bushings.

(2) Apply two spray coats of light gull gray acrylic lacquer (item 5) on same area.

3-20. REASSEMBLY.

a. Install trunnion (7, figure 3-8) in yoke (1) with thrust plugs (4), shims (5), and insert (15). Refer to paragraph 3-7f.

b. Purge lubricate tail rotor hub at fitting (11) with grease (item 82).

c. Install tail rotor blades (19) with bolts (16), washers (17), and nut (18). (Refer to paragraph 3-10.)

d. Balance tail rotor hub and blade assembly. (Refer to paragraph 3-11)

Part 5
Rework — Tail Rotor Blade Assembly (P/Nos. 206-016-201-1 and 206-016-201-103)

Note

Screen records to ensure tail rotor blade has not reached retirement hours. (Refer to Section I AIRWORTHINESS LIMITATIONS SCHEDULE.)

Limits Charts, listing critical dimensions of parts, are provided as a convenience in determining closeness of fit between mating parts. They also provide replacement dimensions as a guide for replacement of worn parts. It is not intended that all dimensions listed on Limits Charts are to be checked out as a prescribed rework procedure. Parts that give evidence of wear or physical damage will be checked dimensionally.

For consumable materials item numbers, refer to Section I , CONSUMABLE MATERIALS, Table 1-1 .

3-21. TAIL ROTOR BLADE (STAINLESS STEEL) REWORK.

WARNING

Stainless steel tail rotor blade (206-016-201-1) can only be installed in compliance with Service Instruction 206-112, helicopters 498 through 2211. Blade can only be installed on a tail rotor hub that contains a shot peened 206-011-811-09 yoke.

3-22. DESCRIPTION. The tail rotor blades are all metal assemblies consisting of a stainless steel shell reinforced by a honeycomb filler and stainless steel leading edge abrasive strip. Two spherical bearings are installed in an aluminum alloy retention block to provide for pitch change movement of the blades in the tail rotor hub.

3-23. DISASSEMBLY — TAIL ROTOR BLADES.

a. Cut and remove lockwire from bolts (1, figure 3-14 . Remove bolts (1) and washers (2).

b. Remove pitch horn (5) from tail rotor blades (9). Pitch horn is bonded to butt end of tail rotor blades with sealant. Use extreme caution to prevent damage to tail rotor blades when removing pitch horn.

c. Remove old sealant from butt end of tail rotor blade (9) and pitch horn (5) by scraping with a plastic or phenolic scraper.

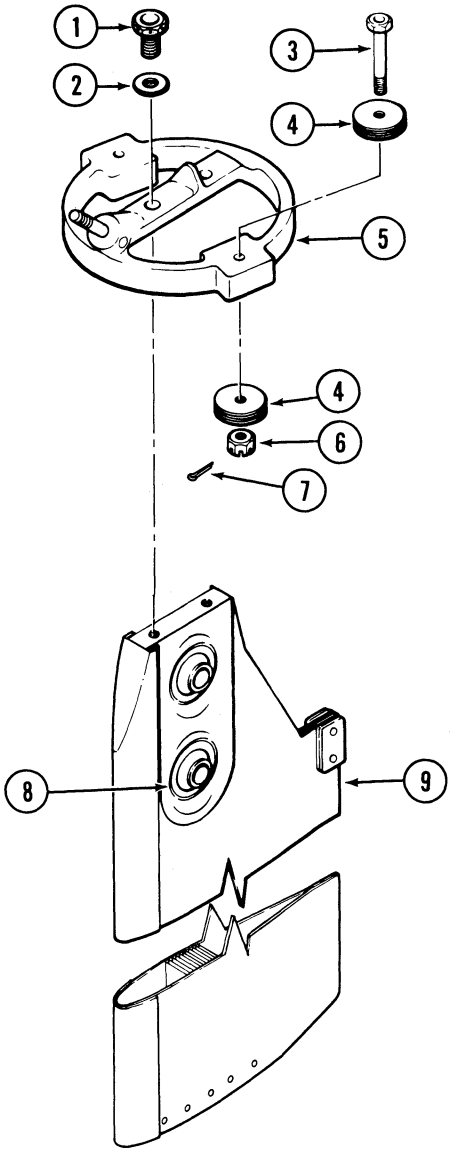

1. Bolt
2. Washer
3. Bolt
4. Washers (AN 970-3)
5. Pitch horn
6. Nut
7. Cotter pin
8. Bearing
9. Blade

L206010-70

Figure 3-14. Tail Rotor Blade Assembly (206-016-201)

3-24. CLEANING — TAIL ROTOR BLADES.

Note

The following cleaning procedure should be accomplished each week, or more frequently if deemed necessary, to prevent corrosion and extend tail rotor blade service life.

a. Wipe tail rotor blades clean with naphtha (item 36) or drycleaning solvent (item 12).

b. Wash tail rotor blades with a mild detergent soap cleaner (item 106). Rinse with clean water and wipe dry with clean cloths.

c. Wax tail rotor blade surfaces with wax (item 78). Do not use silicone type waxes for they may interfere with future repairs or refinishing.

3-25. INSPECTION AND REPAIR — TAIL ROTOR BLADES.

WARNING

If a crack exists in any location, the blade shall be replaced. All dents should be closely inspected for nicks, scratches and cracks. If nicks or scratches exist in dents and the total depth is in excess of that permitted in steps b.(1)(a), b.(2)(b), and b.(2)(c), the blade shall be replaced. Corroded or damaged rivets on tip block end of blade shall be replaced per step a.(6).

a. Any damage to tail rotor blades exceeding the following limits or conditions shall require that the blade be scrapped.

(1) Water in core.

(2) Any blade that has reached the maximum service life. (Refer to Airworthiness Limitations Schedule.)

(3) Corrosion in core or in core cavity.

(4) Any penetration through retention block (2, figure 3-15), root end doublers, leading and trailing edge, or tip block (10) is cracked.

(5) If one of the blades of a pair has been damaged enough that metal has been torn, or any bond lines have separated, then both blades must be scrapped.

(6) Rivet Inspection/Replacement.

(a) Inspect blade for corroded rivets and/or missing rivet heads.

(b) Install replacement rivets per figure 3-16.

b. Any damage in excess of that noted below is reason to remove the blade.

(1) Skins inboard of Station 23. (Refer to figure 3-17 .)

(a) Nicks and scratches running within 0 to 15 degrees of the blade spanline and not in excess of 0.004 inch in depth must be polished out.

(b) All other nicks and scratches not in excess of 0.003 inch in depth must be polished out.

(c) Sharp dents in the skin (which do not break the skin or remove metal), except the area of the retention block which are not in excess of 0.010 inch in depth, are permissible.

(d) Non-sharp dents in skin, except in area of the retention block which are not in excess of 0.020 inch in depth are permissible.

(2) Skins outboard of Station 23.

(a) Nicks and scratches which are not in excess of 0.004 inch in depth must be polished out.

(b) Sharp dents which do not break the skin or remove metal and are not in excess of 0.030 inch in depth are permissible.

(c) Non-sharp dents, which are not in excess of 0.060 inch in depth are permissible.

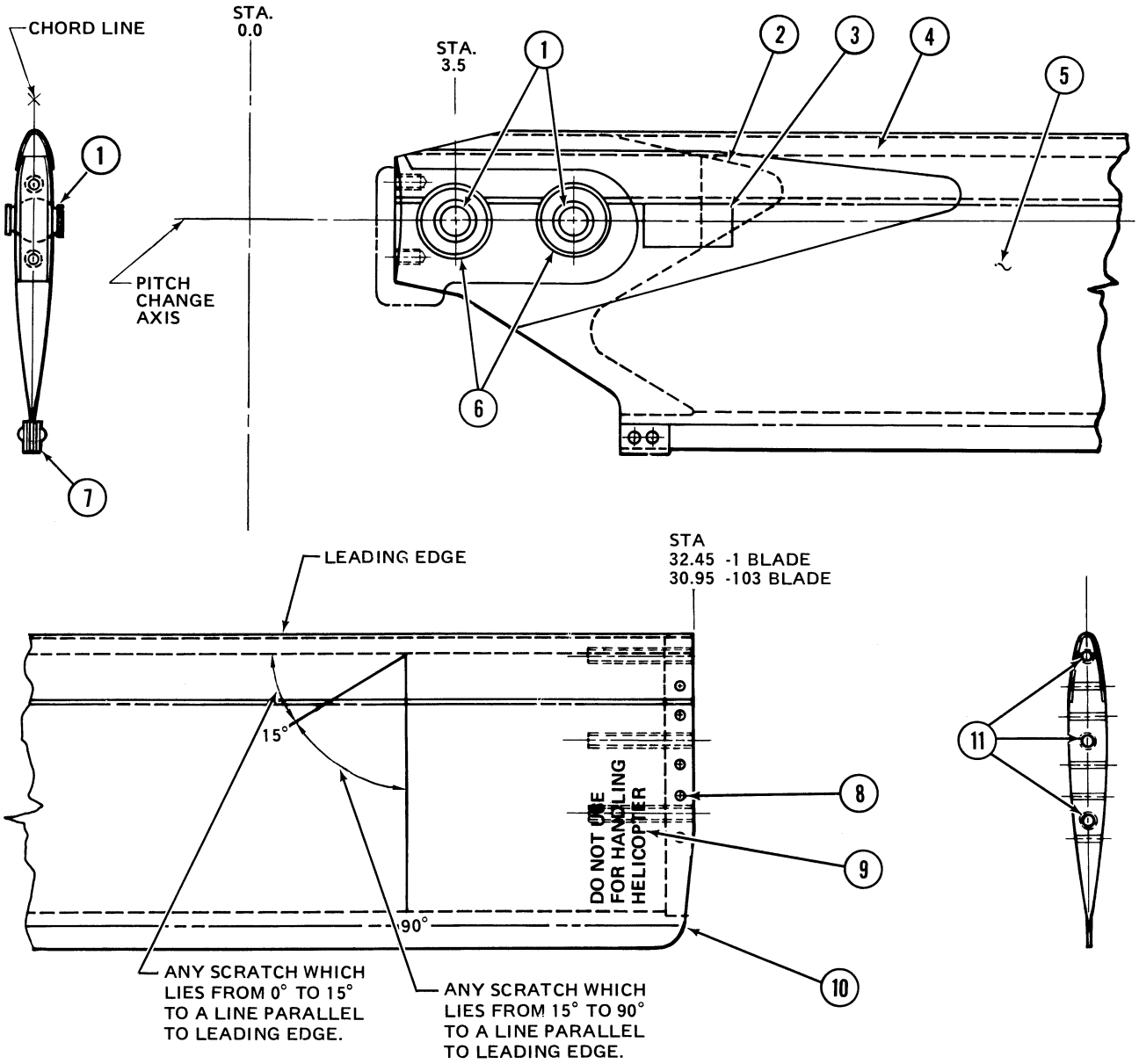

1. Bearing
2. Retention block
3. Identification plate
4. Abrasive strip
5. Blade
6. Sleeve
7. Weight
8. Rivet
9. Stencil
10. Tip block
11. Weight

L206010-72B
206-016-031

Figure 3-15. Tail Rotor Blade (206-016-201)

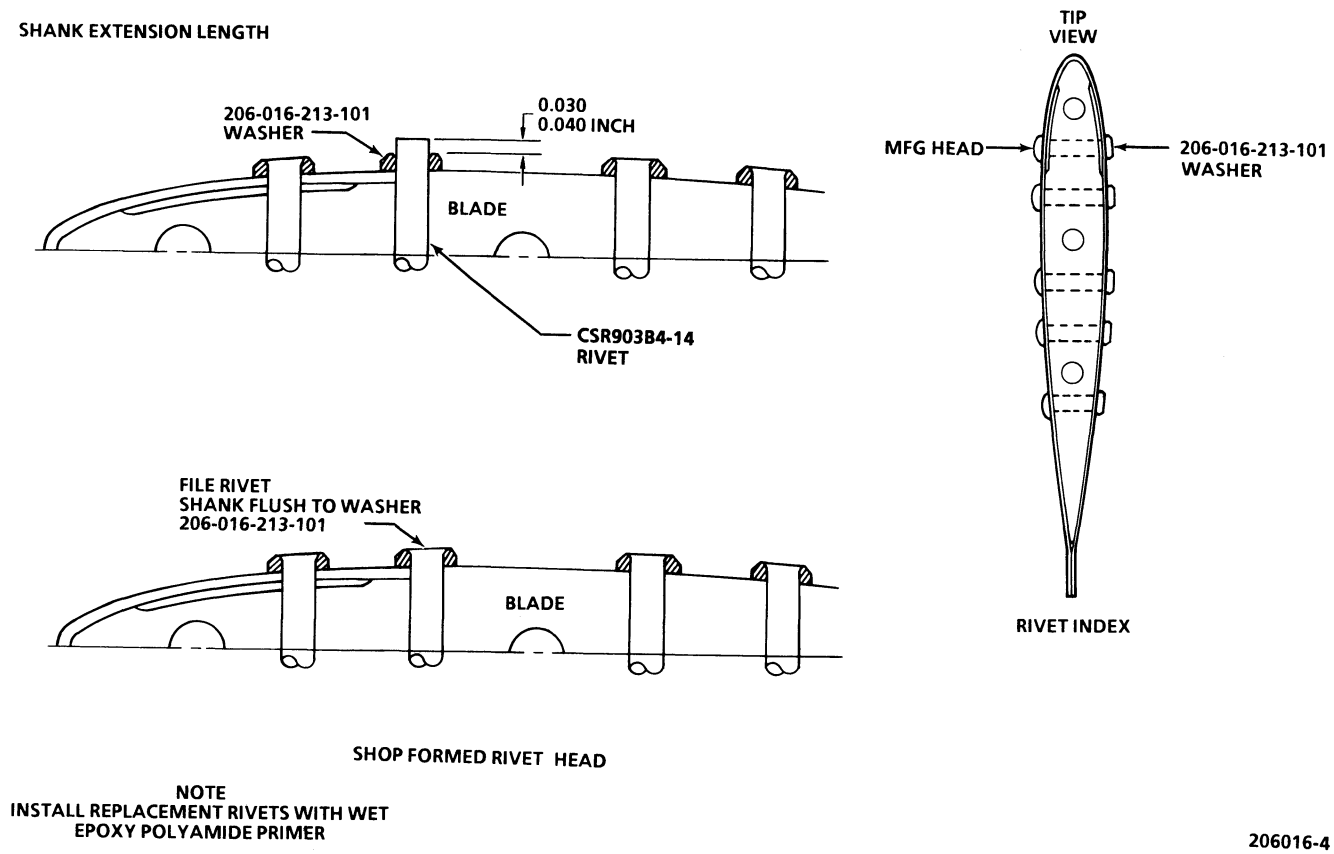

Figure 3-16. Tail Rotor Blade Rivet Installation

(3) Abrasive Strip.

Note

If abrasive strip is cut through, ripped or has been displaced to cause an abrupt discontinuity, the blade should be scrapped.

(a) Dents in the abrasive strip, inboard of Station 23.0 in excess of 0.006 inch are not acceptable at the extreme leading edge radius.

(b) Other dents in the abrasive strip should be inspected to the same limits as dents in the skin. (Refer to preceding steps b.(1) and b.(2).

(4) Scratches, nicks or dents in the extreme trailing edge 0.008 inch deep or less may be polished out over a distance of at least 1.0 inch each side of the damage.

(5) Void limits.

(a) Voids are not allowed within 0.25 inch of trailing edge and within 0.50 inch of inboard and outboard ends of abrasive strip, except as allowed in steps (c) and (d) below. Not more than 15 percent of remaining area of abrasive strip shall be void.

(b) At the trailing edge of the shell, void 0.12 inch maximum in width (chordwise) is allowed. Edge voids are not acceptable, but may be repaired.

(c) Voids between the shell and the root end retention block.

1 A void 0.25 inch wide (maximum at the leading edge is acceptable provided it is sealed.

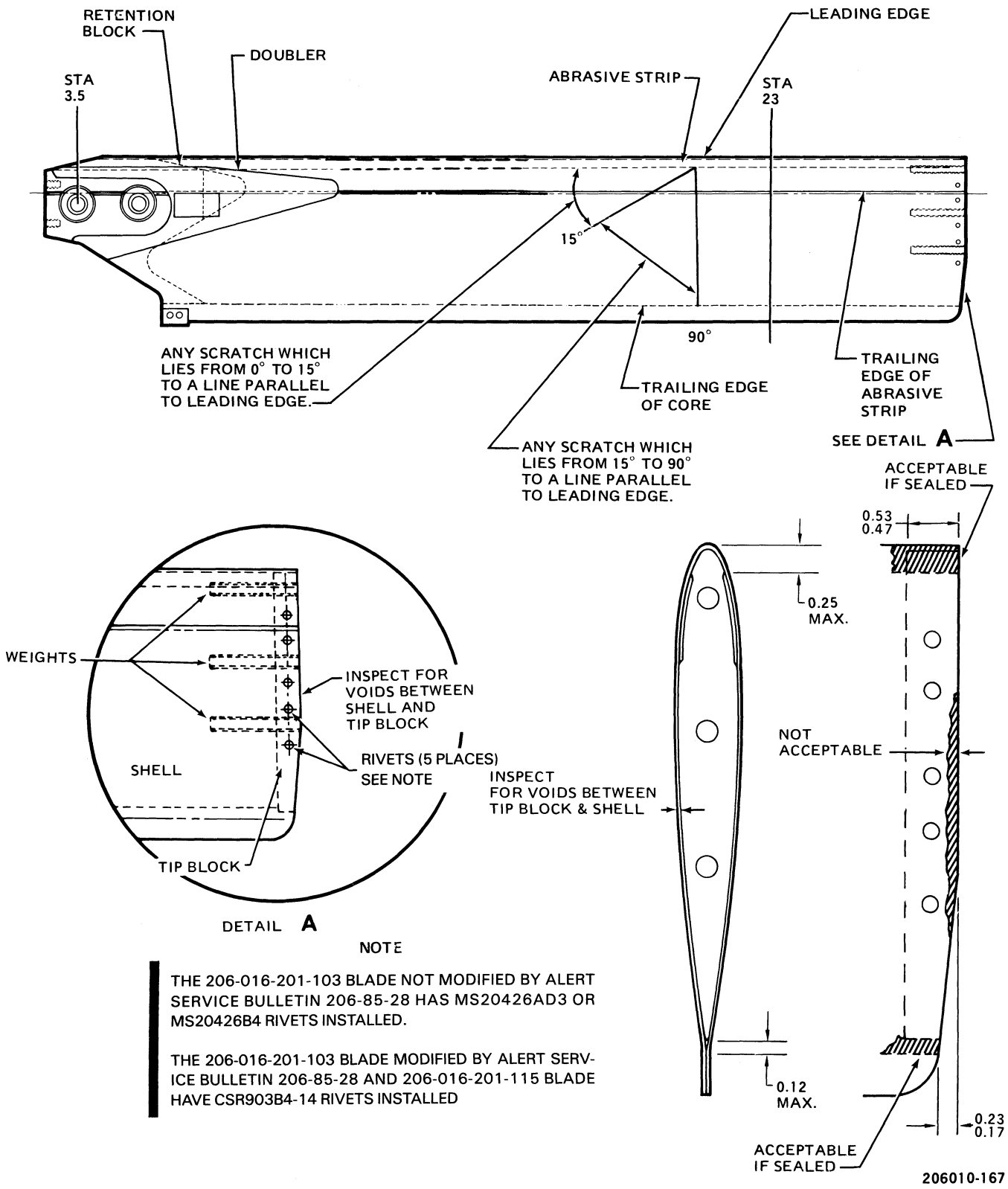

NOTE

THE 206-016-201-103 BLADE NOT MODIFIED BY ALERT SERVICE BULLETIN 206-85-28 HAS MS20426AD3 OR MS20426B4 RIVETS INSTALLED.

THE 206-016-201-103 BLADE MODIFIED BY ALERT SERVICE BULLETIN 206-85-28 AND 206-016-201-115 BLADE HAVE CSR903B4-14 RIVETS INSTALLED

Figure 3-17. Tail Rotor Blade

BHT-206A/B-M&O

2 A void (or gap), 0.12 inch wide (chordwise) between the shell and the butt block at the trailing edge, is acceptable provided it is sealed.

3 Edge voids are not allowed between the shell and the retention block except as specified in above paragraph 2.

(d) Visually check for voids or separations between the shell and the tip block. Limits for voids or gaps between the shell and tip block are as follows:

1 A void (or gap) 0.25 inch wide (chordwise) at the LEADING EDGE is acceptable but must be sealed. (See Figure 3-17.) Seal with adhesive (item 10) or (item 31).

2 A void (or gap) 0.12 inch wide (chordwise) between the shell and the AFT END of the tip block is acceptable but must be sealed. Seal with adhesive (item 10) or (item 31).

3 With exception of paragraph 1 and 2 above, VOIDS BETWEEN THE SHELL AND THE TIP BLOCK THAT ARE VISIBLE AT THE TIP ARE UNACCEPTABLE.

4 Any voids in excess of these limitations will require replacement of the blade.

5 Any movement of the tip block outboard of the tip of the shell shall require replacement of the blade.

(e) Voids between root end doubler and skin.

1 Edge voids are not allowed.

2 Voids not exceeding 0.50 inch chordwise and 1.0 inch spanwise are acceptable provided 0.25 inch good edge bond exists.

(f) Replace bearings if damaged, axial wear exceeds 0.015 inch, or tail rotor vibration was reported. (Refer to Section I) for bearing replacement.)

(g) If one of the blades of a pair has been damaged badly enough due to hard landing or sudden stoppage that metal has been torn or any bond lines have been separated, then both blades must be scrapped.

(h) If one of the blades of a pair has been damaged slightly by denting, return both blades to an authorized blade repair station for evaluation.

(i) If any movement of the tip end or root end balance weights has occurred, scrap the blade.

(j) If the tip block is cracked, scrap the blade.

(k) If blades pass the above inspection requirements, and no other discrepancies exist, the blade is serviceable.

(l) Known or suspected contact of tail rotor blades with soft terrain, snow, water or dense vegetation should be considered as sudden stoppage and both blades returned to an authorized repair station for evaluation, unless the blade is obviously scrap.

c. Inspect tail rotor blades visually and review accompanying records to determine whether blades have been subjected to an accident or incident outside the realm of normal usage.

(1) If there is evidence of accident or incident, proceed with normal blade repairs, as required.

(2) If there is evidence of accident or incident damage, proceed with major blade repairs or replacement, as required, refer to step g. below.

d. Inspect spherical bearing (8, figure 3-14) for damage or wear. Replace bearings that are damaged or when axial wear exceeds 0.010 inch. (Refer to paragraph 3-28)

e. Inspect pitch horn (figure 3-13) for mechanical and corrosion damage.

(1) Inspect pitch horn stud for burrs, damaged threads, and for straightness. Shank of pitch horn shall not be damaged in excess of what can be cleaned up with fine abrasive cloth or paper (item 15). Thread damage shall not exceed one-third thread depth and two threads.

(2) Blend out nicks, scratches and gouges on ring portion of pitch horn with No. 80 grit abrasive cloth or paper (item 15). Maximum damage and repair depth to center crosspiece is 0.030 inch and to ring portion 0.010 inch. Minimum radius of

repair on center cross piece is 0.35 inch and ring portion is 0.50 inch.

(3) Apply one coat of primer (item 56) and two coats of acrylic lacquer (item 5), aluminum color No. 17178, to repaired areas. Acrylic lacquer should be applied within four hours after priming. (Refer to Section I.) Do not apply primer or lacquer to exposed portion of stud.

f. Any damage to tail rotor blades less than the limits in preceding step a. may be reparable.

g. Tail rotor blades with damage less than the limits and conditions stated in step a. may be repaired at an approved repair facility. Repair facilities are capable of accomplishing the following repairs to tail rotor blades.

(1) Spherical bearing (8, figure 3-14) and sleeve replacement.

(2) Complete refinishing of tail rotor blade.

(3) Inspection after major overspeed, sudden stoppage, and hard landing. Known or suspected contact of tail rotor blades with soft terrain, snow, water, or dense vegetation should be considered as sudden stoppage.

(4) Tail rotor blade balance to a master blade.

(5) If one of the blades of a pair has been damaged slightly by denting, return both blades to approved repair facility for evaluation.

h. Refinishing tail rotor blades. (Refer to paragraph 3-26.)

3-26. REFINISHING — TAIL ROTOR BLADES.

a. Thoroughly wipe tail rotor blade surface to be repainted with mineral spirits (commercial grade) or solvent (item 55).

b. Allow solvent to wet blade for a few minutes, then wipe dry with clean dry rags or cheesecloth.

c. Sand blade with 400 grit or finer abrasive cloth (item 15), until a uniform matte finish is obtained.

d. Wash sanded blade with abrasive pads (item 9) and cleaning compound (item 157) solution. Rinse with clean water.

e. Repeat preceding steps a. through d. as required to obtain a water break-free blade surface.

Note

From completion of next step through final painting, blade should not be handled with bare hands.

f. If bare metal is exposed, prepare blade by applying a brush or spray coating of alcohol phosphoric cleaner (item 33).

Note

Leading edge of blade is not painted. See figure 3-18.

g. Apply one coat of urethane primer (item 156) to cover blade surface. Primer should be overcoated after 1 to 8 hours air dry. If 8 hours air dry is exceeded, primer must be sanded and reapplied prior to overcoating.

h. Apply one or two coats of white urethane paint (item 158). Allow 30 minutes to 72 hours air dry between coats. If 72 hours air dry is exceeded, initial coat(s) shall be sanded prior to overcoating.

i. After 6 to 72 hours air dry, mask area of blade to remain white with tape (item 69). See figure 3-18. If 72 hours air dry is exceeded, blade to be striped shall be sanded prior to overcoating.

j. Apply one or two coats of black urethane paint (item 158) for striping blade. Allow 30 minutes to 72 hours air dry between coats. Remove masking tape.

k. Stencil the following on both sides of tail rotor blade using appropriate black paint or ink. Letters must be one-quarter inch high. Spacing between lines must be one-sixteenth inch.

DO NOT USE
FOR HANDLING
HELICOPTER

Note

Tail rotor blade must be cleaned each 100 hours to maintain improved visibility.

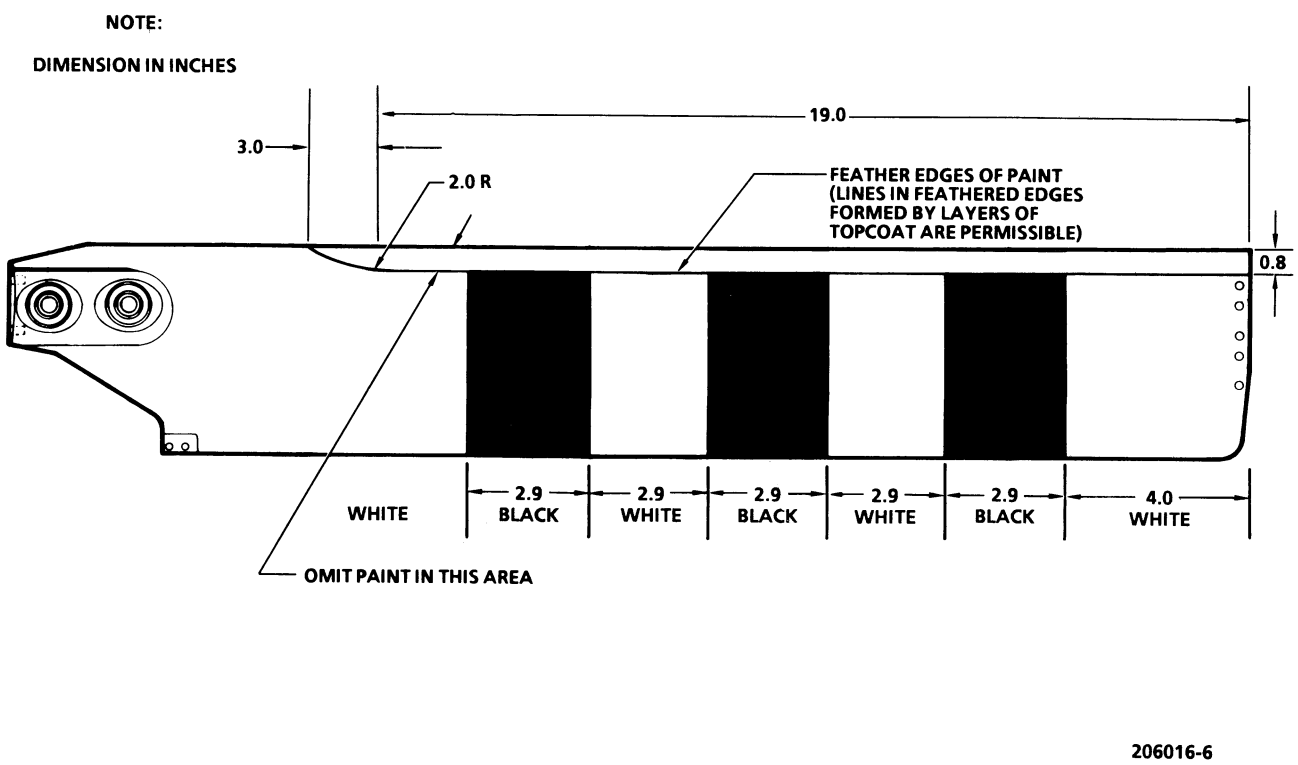

Figure 3-18. Tail Rotor Blade Paint Scheme

3-27. REASSEMBLY — TAIL ROTOR BLADES.

a. Fill the area of the pitch horns (5, figure 3-14) that mates with the tail rotor blades (9) with sealant (item 7).

b. Install bolts (1) with washers (2) through pitch horns (5) and secure to tail rotor blades (9). Install pitch horns with stud to leading edge surface of tail rotor blades.

c. Torque bolts (1) 30 to 40 inch-pounds. After 1 hour, retorque bolts 30 to 40 inch-pounds and secure bolt head together with 0.032 inch lockwire (item 19).

d. Apply a smooth coat of sealant (item 7) to all remaining unpainted surfaces of tail rotor blade butt, blend into squeezed out sealant around pitch horn and fair surfaces.

e. Install bolts (3) with four washers (4) on each side of pitch horns (5) and secure with nuts (6). Maximum of 16 washers (4) are to be installed on each pitch horn (5). Torque nuts (6) 15 to 30 inch-pounds and secure with cotter pins (7).

Note

Final bolt length and washer quantities to be determined at time of flight test when achieving desired anti-torque pedal balance forces. Washers must be installed in accordance with step e. prior to balancing tail rotor hub and blade assembly.

3-28. BEARING REPLACEMENT — TAIL ROTOR BLADES.

Tail rotor blade spherical bearings (8, figure 3-14) shall be replaced when damaged or when axial wear exceeds 0.010 inch. Replacement bearing must be of the same part number as installed bearing, or in part numbered pairs. (Refer to Section I .)