Section VI
Power Train Systems

TABLE OF CONTENTS

TABLE OF CONTENTS (Cont)

LIST OF TABLES

LIST OF FIGURES

LIST OF FIGURES (Cont)

LIST OF FIGURES (Cont)

Section VI
Power Train Systems

6-1. POWER TRAIN SYSTEM.

6-2. GENERAL.

Table 6-1 outlines the major changes and improvements that have occurred on the designated helicopters power train major components. Due to the interchangeability of these components, maintenance and overhaul instructions in this section shall include the component part number in the paragraph titles and illustrations, as applicable. For the tail rotor drive shaft systems, descriptive paragraph titles have been used to aid in the location of maintenance information and instructions.

6-3. DESCRIPTION – POWER TRAIN SYSTEM. (Helicopters 4 through 1251.)

The power train system comprises a transmission, freewheeling drive unit, engine to transmission drive shaft, oil cooler fan and drive shaft, two short tail rotor drive shafts, a long tail rotor drive shaft and tail rotor gearbox. The freewheeling unit, mounted in the engine accessory gear case, connects the engine to transmission through input drive shaft on forward side and tail rotor gearbox through related shafting on aft side to provide simultaneous rotation of main and tail rotor and to permit free rotation of both rotors when engine is not operating. (See figure 6-1.)

6-4. DESCRIPTION – POWER TRAIN SYSTEM. (Helicopters 1252 and Subsequent.)

The power train system comprises a transmission, freewheeling drive unit, engine to transmission drive shaft, oil cooler fan and drive shaft, two short tail rotor drive shafts (one forward and one aft of oil cooler fan assembly), five tail rotor drive shaft segments with bearing hanger assemblies, and a tail rotor gearbox. The freewheeling unit, mounted in the engine accessory gear case, connects the engine to transmission through input drive shaft on forward side and tail rotor gearbox through related shafting on aft side to provide simultaneous rotation of main and tail rotor and to permit free rotation of both rotors when engine is not operating. (See figure 6-2.)

6-4A. ALLOWABLE LEAKAGE RATES FOR POWER TRAIN COMPONENTS.

Table 6-1A presents a measurement of allowable leakage rates which may be used in conjunction with power train troubleshooting.

6-5. TRANSMISSION.

6-6. DESCRIPTION. The transmission provides a two stage reduction of 15.23 to 1.0 (6000 to 394 RPM). The first stage is bevel gear arrangement with 3.26 to 1.0 reduction; the second stage reduction is obtained with a planetary gear train providing 4.67 to 1.0 reduction. A complete hydraulic system power pack is mounted on the forward side of the transmission case and is driven by a transmission accessory gear. The accessory drive gear provides a 1.42 to 1.0 reduction. The transmission is mounted on the cabin roof deck, forward of the power plant. The main rotor mast is secured in top of transmission by the mast bearing, bearing liner, and bearing and seal plate. Transmission is supported by and isolated from the airframe by a system composed of two pylon support links, one on each side; a drag link secured to bottom of transmission and connected by bolt to the rubber isolation support mount on the airframe. A cylindrical boss extends downward from forward end of drag link. and fits loosely in a hole in the pylon stop mounted on airframe, providing a positive limit of travel of the pylon. (See figures 6-3 and 6-4.)

Lubrication is provided by a system which includes a pump, relief valves, filter, spray jets, temperature bulb and an oil cooler. The pump is a constant volume type driven by the accessory gear. An oil level sight gage is located on the right side of the transmission case where it is easily inspected. A breather type filler cap and a magnetic drain plug are incorporated (the -13, -15, and -25 transmissions incorporate two magnetic drain plugs or chip detector plugs). The transmission also furnishes lubrication for the freewheeling unit mounted in the engine accessory gear case. A pressure line and a return oil line pass through the forward bulkhead to connect the transmission and freewheeling unit. A line with filter on transmission connects to a restrictor on the pressure oil line and connects to an oil prssure gage on pilot's instrument panel. The oil system schematic is shown in figures 6-5 and 6-6.

6-6A. TROUBLESHOOTING — TRANSMISSION SYSTEM.

Table 6-0 and the following general information provides troubleshooting procedures for the transmission system. It includes indication of troubles, probable causes, and corrective actions to be taken. The troubleshooting table should be used along with the general information and other sources of information such as: transmission oil

system schematic, electrical wiring diagrams, operational checks, serviceability checks, and other detailed procedures in this and other chapters of the manual. The following general information is provided to assist in troubleshooting and should be used in conjunction with table 6-1 .

a. A low lubricating oil level in the transmission will not cause a low oil pressure indication provided that the sump contains enough oil to cover the pump inlet; however, transmission oil temperature may increase.

b. Overfilling the transmission with lubricating oil may cause low or fluctuating oil pressure due to foaming of oil.

c. An external oil leak will cause failure of the transmission if all the oil is lost. While oil remains to supply the pump, the pressure relief valve will tend to compensate for leakage and maintain normal pressure. This applies especially to leaks located between pump and relief valve. Leaks located beyond the relief valve could cause a low oil pressure indication.

d. An internal oil leak will not affect oil level, but could cause inadequate lubrication to parts beyond the leak. Also, oil pressure and oil temperature could be affected.

e. Cumulative clogging of oil filter screens will not be revealed by a gradual drop in oil pressure. The pressure relief valve will remain normal pressure even if the filter element becomes so clogged that oil bypasses the filter through the bypass valve. If this does occur, the manual reset bypass indicator on the filter head wil extend to show that the filter is being bypassed.

Table 6-0. Transmission system troubleshooting

INDICATION OF TROUBLE	PROBABLE CAUSE	CORRECTIVE ACTION
	TRANSMISSION	
TRANS TEMP Caution light ON, but oil temperature indicator within limits	Faulty wiring or faulty thermoswitch	Check light wiring system for continuity and for grounding. Replace faulty wiring. (Refer to Section XIII.) Remove thermoswitch and replace with switch known to be accurate. Perform ground run-up for functional check.
Transmission oil temperature indicates high on pilot's instrument, but TRANS TEMP caution light not on	Faulty wiring, faulty temperature bulb, or faulty instrument	Check temperature bulb wiring for continuity and for grounding. Replace faulty wiring. (Refer to Section XIII.) Remove temperature bulb and replace with bulb known to be accurate, perform ground run-up for functional check. Remove instrument and replace with instrument known to be accurate. Perform ground run-up for functional check. (Refer to Section X.)

Table 6-0. Transmission system troubleshooting (Cont)

INDICATION OF TROUBLE	PROBABLE CAUSE	CORRECTIVE ACTION
TRANS TEMP Caution light ON and/or transmission oil temperature indicator indicates high oil temperature	Obstructed air duct into transmission oil cooler air passages	Clear air duct and oil cooler air passages.
	Oil cooler integral thermal bypass valve malfunction or oil cooler internal passages clogged	Check relative temperature of oil cooler and of two oil tubes from transmission to oil cooler immediately after engine shutdown. Replace oil cooler if thermal bypass valve is faulty. (Refer to Section VI.) Remove oil cooler and check visually. If it appears that cooler is clogged, replace. Flush out oil tubes, check electric chip detectors and pump screen for metal particles. (Refer to Section VI.)
	Clogged or damaged oil jet	Remove and inspect oil jets. Clean clogged jets, replace damaged jets.
	Transmission internal failure.	Check oil pump screen, magnetic plug in oil monitor on 206-040-126 filter heads, electric chip detectors and oil filter. If any chips are found, retain them in a clean container for subsequent investigation. (Refer to Section VI.) If chips are found, refer to identification of metal particles and serviceability check.
TRANS PRESS caution light ON, but pressure indicator within limits	1. Check for oil leaks. 2. Install direct reading gage to verify oil pressure 3. Faulty wiring or faulty low pressure switch	Check light wiring system for continuity and for grounding. Replace faulty wiring. (Refer to Section XIII.) Remove pressure switch and replace with switch known to be serviceable, perform ground run-up for functional check. (Refer to Section XIII.)

Table 6-0. Transmission system troubleshooting (Cont)

INDICATION OF TROUBLE	PROBABLE CAUSE	CORRECTIVE ACTION
Transmission oil pressure indicates low on pilot's instrument, but TRANS PRESS caution light not ON	Leak in tubing from transmission to pressure indicator or faulty indicator	Check tubing from transmission to indicator for leaks. Repair or replace faulty tubing. (Refer to Section VI.)
		Remove indicator and replace with indicator known to be accurate. Perform ground run-up for functional check. (Refer to Section X.)
	Pressure switch or wiring is defective	Check wiring. Check pressure switch. (Refer to Section XIII.)
Transmission oil pressure low on indicator and TRANS PRESS caution light ON	Transmission oil level high	Check lubricating oil for evidence of foaming which can cause low fluctuating oil pressure. Drain and refill to correct level with designated oil. (Refer to Section VI.)
	Transmission oil level low	Check lubricating oil level. If oil level is low enough to have caused low pressure reading, the transmission may have been damaged. (Refer to Section VI.)
	Pressure relief valve out of adjustment, leaking or faulty	Check pressure relief valve for leaking. Replace packings on relief valve body. Adjust pressure relief valve. (Refer to Section VI.)
	Oil pump faulty	Remove oil pump and inspect visually. Replace faulty pump.
	Packings on jets faulty	Remove jets and inspect packings visually. Install oil jets with new packings. (Refer to Section VI.)
	Oil filter faulty	Replace filter, service transmission and make serviceability check. (Refer to Section VI.)
	Transmission filled with improper lubricating oil	Drain oil into clean container and check visually. If it appears that incorrect oil was used, save oil for subsequent

Table 6-0. Transmission system troubleshooting (Cont)

INDICATION OF TROUBLE	PROBABLE CAUSE	CORRECTIVE ACTION
		laboratory inspection. Notify Service Department, Bell Helicopter Textron to determine whether conducting a transmission serviceability check will suffice to make the helicopter airworthy. (Refer to Section VI.)
Low oil level in transmission with high oil level in engine	Leaking seals in engine accessory gearbox at freewheeling assembly	Remove freewheeling unit from engine accessory gearbox and replace two seals in engine accessory case. Install the double-lip-type seals. (Refer to Section VI.)
TRANS CHIP caution light segment illuminated	Metal chips have accumulated on electric chip detector	Remove both electric chip detectors, magnetic plug in oil monitor on 206-040-126 filter heads, and inspect for metal chips. If chips are found, retain them in a clean container for subsequent investigation. (Refer to Section VI.) If any chips are found, refer to paragraphs 6-18 and 6-21D for identification of metal particles and serviceability check. (Refer to Section VI.)
	Faulty wiring or faulty electric chip detector	Check wiring to both electric chip detectors for continuity and for grounding. Replace faulty wiring. (Refer to Section XIII.) Check both electric chip detectors for damage which could cause false indication. Replace faulty electric chip detector. (Refer to Section VI.)
Rubber particles found during inspection of transmission oil pump inlet screen	Cut packing in pressure relief valve seat or oil jets	Remove pressure relief valve and check condition of packings. Remove oil jets and check condition of packings. (Refer to Section VI.) Check transmission case for sharp edges which could cut packings. Install new packings. (Refer to Section VI.)

Table 6-0. Transmission system troubleshooting (Cont)

INDICATION OF TROUBLE	PROBABLE CAUSE	CORRECTIVE ACTION
		Inspect and clean oil jets and freewheeling lube restrictor on left cabin roof side. Remove and inspect packing or pressure relief valve.

6-7. TRANSMISSION MAINTENANCE INSTRUCTIONS.

6-8. OIL PUMP. A constant volume transmission oil pump is mounted in the transmission inboard of the hydraulic pump and is driven by the accessory drive bevel gear. The pump may be removed by first removing the hydraulic pump assembly, then removing four stud nuts and withdrawing the pump from the case. (See figures 6-3 and 6-4.)

6-9. OIL STRAINER. An oil pump strainer is mounted in the lower case just forward of the transmission oil level sight gage. To remove the strainer, remove the spiral lock retainer ring from around the plug having the projecting knob. Withdraw plug and strainer. Inspect strainer for foreign material and metal particles. Install new O-ring on strainer, insert strainer in transmission case and install retainer ring. (See figure 6-3 and 6-4)

6-10. SERVICING – TRANSMISSION OIL FILTER. (Transmissions 206-040-002-5 and -15.)

The oil filter, mounted on the lower left side, is a replaceable type cartridge. To replace: Remove clamp and screw filter from filter head (22, figure 6-3). Lubricate filter cartridge seal with turbine oil (item 20). Screw cartridge in place plus 1/8 turn and secure with clamp. Check for oil leaks on ground run-up.

6-11. SERVICING — TRANSMISSION OIL FILTER. (Transmissions 206-040-002-13, -25 and -29.)

The oil filter, mounted on the lower left side, is a replaceable element type. The filter element (26, figure 6-4) is encased within a filter housing (29) which is attached by studs to the filter head (25). The filter head incorporates a drain valve (30) and an oil monitor (31) that has a screen with a magnetic chip detector plug. To replace the filter, remove the drain valve center plug and drain the filter into a suitable container by depressing the internal valve with a small diameter rod. (Refer to table 6-2 for special drain hose usage.) Remove two nuts, four washers, and pull the filter housing (29) from the head assembly. Using a new filter element and packings, lubricate packings with turbine oil (item 20), and install. Replace filter housing and secure with four washers and two nuts. Replace drain valve plug and tighten to a torque of 20 to 35 inch-pounds. Check for leaks on ground run-up.

6-12. ADJUSTMENT – OIL PRESSURE. The transmission oil pressure adjustment screw (18, figure 6-3 and 21, figure 6-4) is located on the left side of the transmission just aft of the oil filter. To adjust oil pressure loosen locknut and screw adjuster in to increase pressure. Adjust pressure to 45 psi at 6,000 rpm. and tighten locknut.

Table 6-1. Power Train Components – Major Changes

HELICOPTER SERIAL NO.	COMPONENT AND PART NO.	MAJOR CHANGE
4 – 583	Transmission 206-040-002-5	Original, with five changes
584 – 913	Transmission 206-040-002-15	Main Case with 2 chip detectors
914 – 1251	Transmission 206-040-002-13	Filter Assembly – Cartridge type

Table 6-1. Power Train Components — Major Changes (Cont)

HELICOPTER SERIAL NO.	COMPONENT AND PART NO.	MAJOR CHANGE
1252 and Sub.	Transmission 206-040-002-25	Four pinion planetary and electric chip detectors
Spares	206-040-002-29	Grease lubricated sun gear and magnetic carbon input seal.
4 – 517	Freewheeling Assembly 206-040-230-13	Original
518 – 913	Freewheeling Assembly 206-040-230-19	Non-vented
914 – 1413	Freewheeling Assembly 206-040-230-25	Housing with union and drain plug plug and improved sprag clutch from 989 through 1413
1414 and Sub.	Freewheeling Assembly 206-040-270-3	Increased cap size for rotor brake installation and incorporation of electric chip detector
4 – 413	Tail Rotor Gear Box 206-040-400-3	Original
414 – 913	Tail Rotor Gear Box 206-040-400-5	Stud mounted and relocation of drain plug
914 – 1657	Tail Rotor Gear Box 206-040-400-11	Case and cap assembly
1658 and Sub.	Tail Rotor Gear Box 206-040-400-9	Electric chip detector

Table 6-1A. Maximum Allowable Leakage for Power Train Components

COMPONENT	TYPE	LEAKAGE RATE
Transmission (and Freewheeling Assembly)	S	Input quill leakage shall not exceed ten drops per minute. Total transmission leakage at all sources, including freewheeling assembly must not exceed 15 drops per minute.
	D	One quart per three hours of operating time.
Tail Rotor Gearbox	S	Input quill leakage shall not exceed two drops per minute. Total leakage at all sources must not exceed six drops per minute.
	D	50 percent of normal sight gage oil level indication per three hours of operating time.

NOTES:
D — Dynamic
S — Static

6-12A. TROUBLESHOOTING — MAIN DRIVESHAFT.

Refer to table 6-1B for troubleshooting main driveshaft.

Table 6-1B. Main driveshaft troubleshooting

INDICATION OF TROUBLE	PROBABLE CAUSE	CORRECTIVE ACTION
High frequency vibration.	Improper assembled driveshaft.	Remove, disassemble, inspect, and reassemble main driveshaft.
Grease leakage.	Improper assembled driveshaft.	Remove, disassemble, inspect, and reassemble main driveshaft.
	Faulty packings, boots or seals.	Remove, disassemble, inspect, and reassemble main driveshaft.
Abnormal wear of couplings and gears.	Faulty lubrication application or wrong lubricant.	Remove, disassemble, inspect, and reassemble main driveshaft.
	Faulty pylon restraint mount.	Remove and replace mount.
	Faulty elastomeric engine mount isolators.	Remove and replace engine mount vibration isolators.

6-12B. TROUBLESHOOTING — FREEWHEELING ASSEMBLY.

Refer to table 6-1C for troubleshooting freewheeling assembly. For corrective action to be taken for oil contamination, metal particles identification and serviceability checks refer to paragraphs 6-21D and 6-18B.

Table 6-1C. Freewheeling assembly troubleshooting

INDICATION OF TROUBLE	PROBABLE CAUSE	CORRECTIVE ACTION
TRANS CHIP caution light segment illuminated or metal particles found on electric chip detector.	Internal failure of freewheeling clutch or bearings.	Remove freewheeling unit and visually inspect. Replace faulty freewheeling unit and clean oil lines to transmission. Ground run for one hour and check both transmission electric chip detectors and oil screen. Also check filter in oil line from transmission to freewheeling unit. If no chips are found, release for five hours flight operations and then recheck electric chip detectors and oil screen. If no contamination is found on second check, it may be assumed that the transmission was not contaminated.

6-12C. TROUBLESHOOTING — TAIL ROTOR DRIVESHAFT.

Refer to table 6-1D for troubleshooting the tail rotor driveshaft system and oil cooler blower.

Table 6-1D. Tail rotor driveshaft troubleshooting

INDICATION OF TROUBLE	PROBABLE CAUSE	CORRECTIVE ACTION
Vibration believed to be originating in tail rotor drive system.	Bolts in disk couplings loose.	Inspect all disk couplings for loose bolts and for excessive gaps between disks. Replace disks or torque bolts as required.
	Shaft hanger bearings rough or overheating.	Check visually for signs of overheated bearings. If no sign of overheating is noted, recheck after five hours of operation.
		Replace bearings if overheating. Replace bearings if they are still rough after five hours of operation whether they show signs of overheating or not.
	Splined adapters binding.	Check splined adapters for excessive backlash. Replace worn splined adapters and mating driveshaft.
	Oil cooler fan out of balance.	Inspect oil cooler fan for excessive unbalance. If inspection requirements are not met, balance fan assembly in accordance with paragraph 6-77.
Excessive loss of grease from hanger bearings.	Misalignment of bearing in hangers.	Check and correct alignment of bearings.
Binding or roughness when rotor and tail rotor driveshaft is turned by hand.	Dry or faulty hanger bearings.	Inspect bearings for lubrication and condition. Lubricate dry bearings.
		Remove driveshaft segments if necessary, to identify faulty bearing(s). Replace faulty bearings.
	Interference of oil cooler impeller and blower housing.	Inspect oil cooler blower assembly for evidence that impeller is contacting blower housing. Replace faulty oil cooler blower assembly.

Table 6-1B. Main driveshaft troubleshooting (Cont)

INDICATION OF TROUBLE	PROBABLE CAUSE	CORRECTIVE ACTION
	Faulty tail rotor gearbox.	Inspect electric chip detector and tail rotor gearbox lubricating oil for evidence of internal failure. Replace faulty gearbox.

6-12D. TROUBLESHOOTING — TAIL ROTOR GEARBOX.

Refer to table 6-1E for troubleshooting tail rotor gearbox. For corrective action to be taken for oil contamination, metal particle identification, and serviceability checks refer to paragraphs 6-21D , and 6-18C .

Note

Gearbox normal operating temperature may be as high as 170° to 180°F (77° to 82°C). The maximum allowable operating temperature is 212°F (100°C).

Table 6-1E. Tail rotor gearbox troubleshooting

INDICATION OF TROUBLE	PROBABLE CAUSE	CORRECTIVE ACTION
T/R CHIP caution light segment illuminated.	Metal chips have accumulated on chip detector.	Remove electric chip detector and inspect for metal chips. If chips are found, retain them in a clean container for subsequent investigation. If any chips are found, refer to paragraph 6-21D for identification of metal particles. Check for serviceability, paragraph 6-18C.
	Faulty wiring or faulty electric chip detector.	Check wiring to electric chip detector for continuity and grounding. Repair faulty wiring or replace electric chip detector as required.
Oil leakage from tail rotor gearbox.	Faulty seals or packings.	Clean gearbox and recheck for oil leak both static and dynamic (helicopter running). Measure and record rate of leakage. Maximum allowable static or dynamic leakage at input drive quill is two drops per minute. Total allowable leakage from all sources on gearbox is six drops per minute.

Table 6-1E. Tail rotor gearbox troubleshooting (Cont)

INDICATION OF TROUBLE	PROBABLE CAUSE	CORRECTIVE ACTION
		Replace gearbox if maximum allowable leakage rate is exceeded.
	Cracked gearbox housing.	Inspect gearbox attachment sight glass area for cracks in the housing. Replace gearbox if cracks are found.

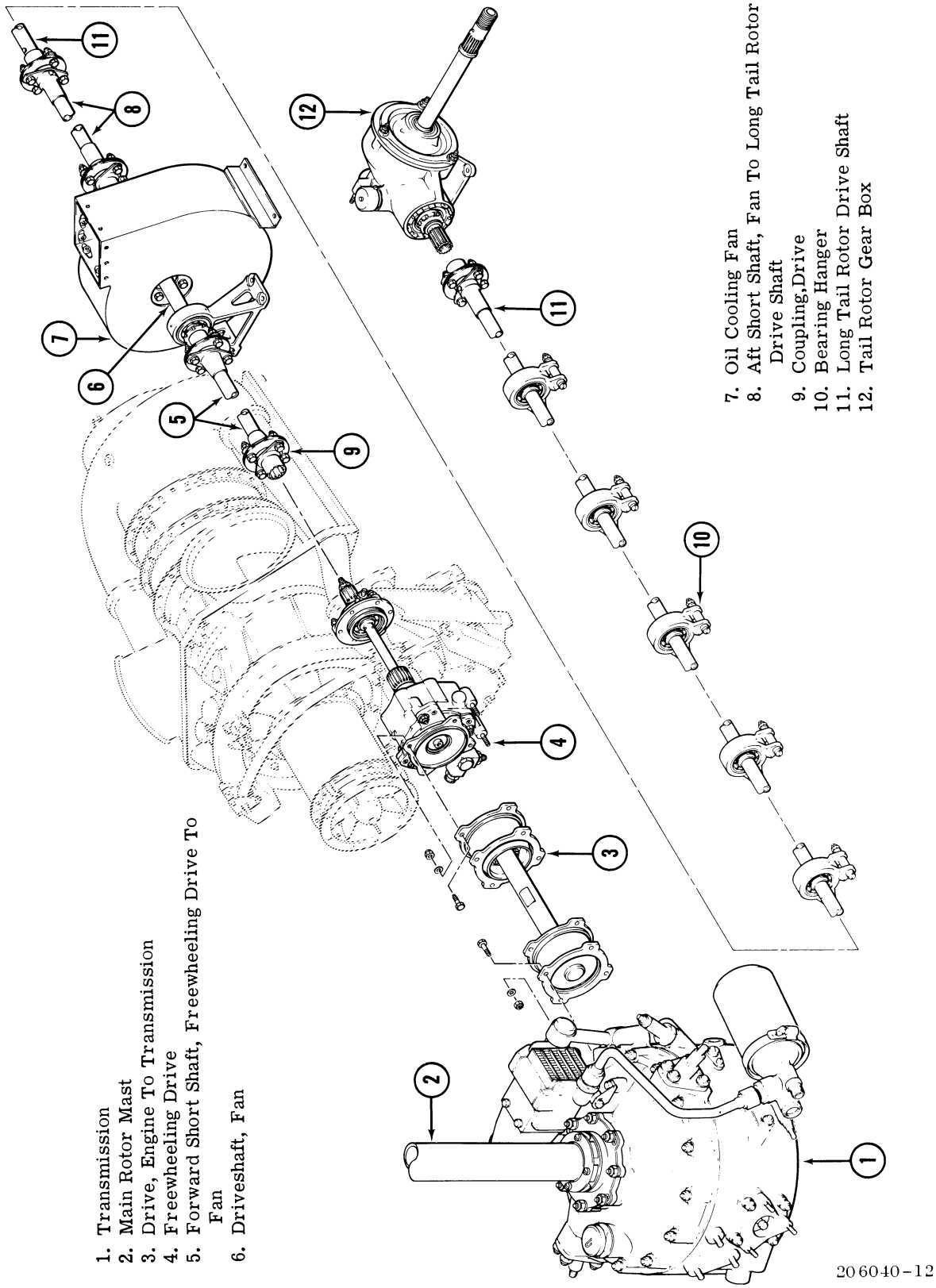

Figure 6-1. Power Train System (Helicopters 4 through 1251)

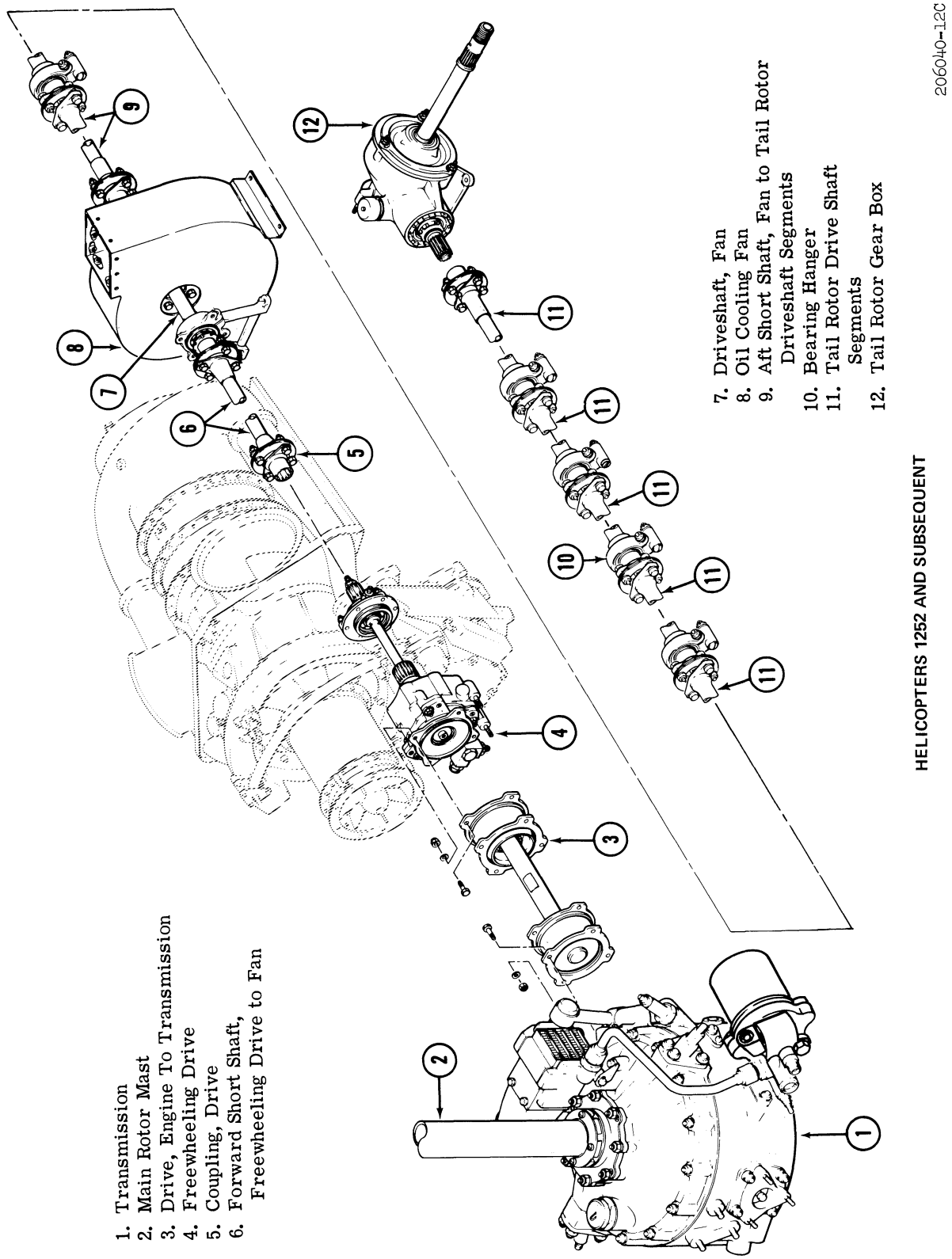

Figure 6-2. Power Train System (Helicopters 1252 and Subsequent)

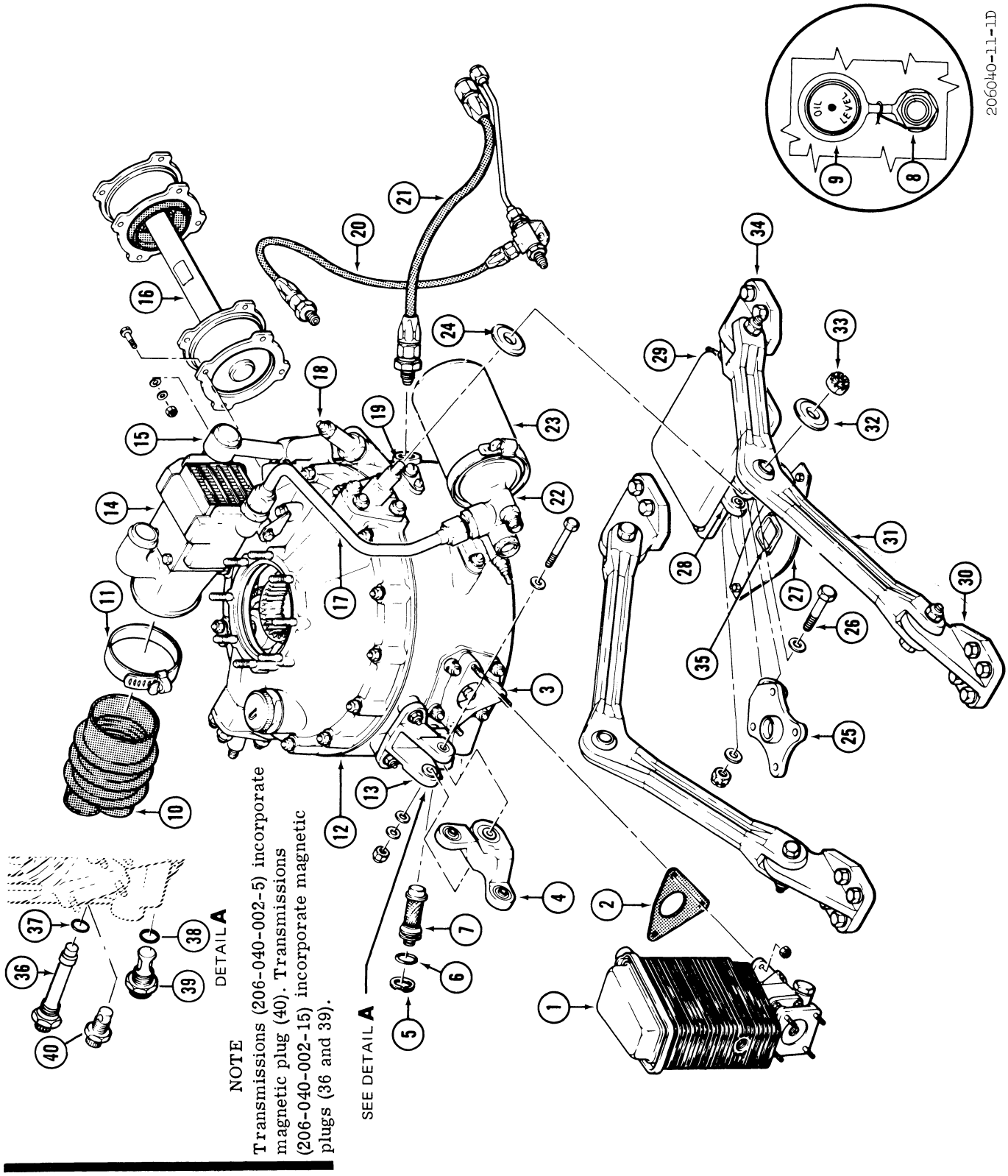

Figure 6-3. Main Transmission Assembly (206-040-002-5 and -15) (Sheet 1 of 2)

1. Hydraulic Oil Pump
2. Gasket
3. Oil Pump
4. Bellcrank, Collective Control
5. Retainer Ring
6. O-Ring
7. Strainer
8. Drain Plug (B-734)
9. Oil Level Sight Gage
10. Air Duct
11. Clamp
12. Transmission
13. Bellcrank Support, Collective Control
14. Oil Cooler
15. Banjo Fitting
16. Driveshaft, Engine to Transmission
17. Oil Line, Filter to Oil Cooler
18. Oil Pressure Adjustment Screw
19. Spindle, Upper Pylon Support
20. Pressure Oil Line to Freewheeling Unit
21. Return Oil Line from Freewheeling Unit
22. Oil Filter Head
23. Oil Filter
24. Radius Washer
25. Pylon Drag Pin Assembly
26. Isolation Mount Bolt
27. Pylon Plate
28. Isolation Mount
29. Isolation Mount Cover
30. Forward Pylon Mount
31. Pylon Mount Link
32. Washer
33. Nut, Pylon Support Spindle
34. Aft Pylon Mount
35. Pylon Stop
36. Magnetic Plug (B-3181)
37. Packing
38. Packing
39. Magnetic Plug (B-3659)
40. Magnetic Plug (B-148)

206040-11-2F

Figure 6-3. Main Transmission Assembly (206-040-002-5 and -15) (Sheet 2 Of 2)

6-13. OIL JETS.

(Figure 6-3 and 6-4.) The oil jets may be removed for inspection and cleaning by removing a retaining screw and withdrawing jet. Clean with cleaning solvent (item 12, **table 1-1**) or equivalent. Replace jets and secure retainer screws with 0.032 inch lockwire (item 19, **table 1-1**). Spacing of retaining screw holes prevents installation of oil jets in the incorrect port. Replace O-rings on jets as required.

6-14. ELECTRIC CHIP DETECTORS.

The chip detector is made up of the self-closing valve and the electric chip detector. Self-closing valve also serves as a drain plug for the transmission. The electric chip detector consists of a self-locking bayonet probe with a permanent magnet at the end. In the event that metal particles should become free in the oil, the magnet will attract the metal particles. When sufficient metal is attracted to complete the circuit between pole and ground, the TRANS CHIP detector segment on the caution panel or the transmission warning light will illuminate.

Note

The electric chip detectors replace the magnetic plugs furnished with the transmission and tail rotor gear box. Installation procedures for electric chip detectors is contained in Service Letter 206-133, for all helicopters.

6-15. REMOVAL – CHIP DETECTORS.

CAUTION

Rough handling of chip detector and the electrical connector is the major cause of failure and of false indications in the caution light system.

Note

When it is necessary to drain oil from the gearbox for any reason, remove electric chip detector and self-closing valve as described in the following procedures.

A drain hose is available for use in draining oil from the transmission, freewheeling unit and tail rotor gear box. (Refer to table 6-2.)

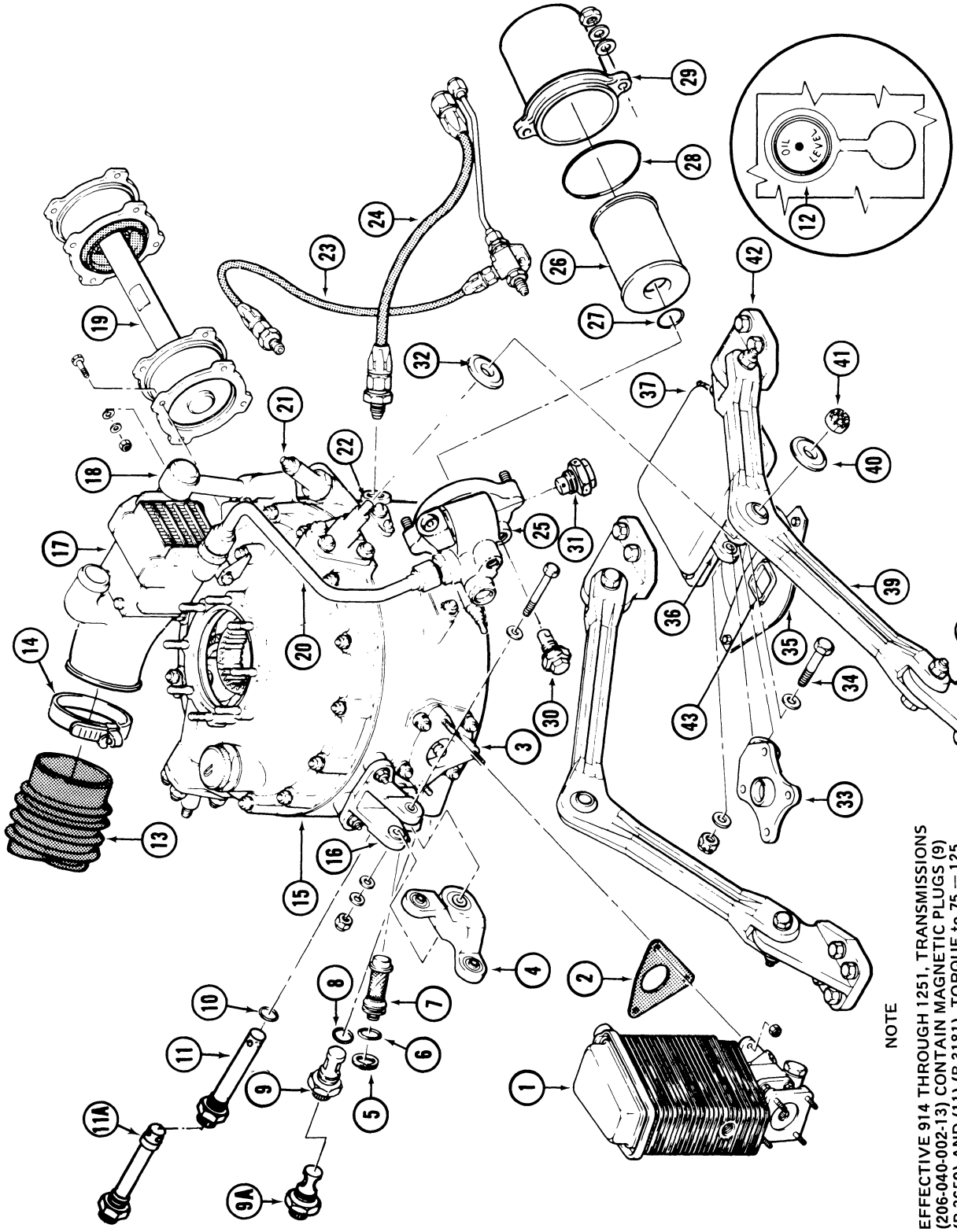

NOTE

EFFECTIVE 914 THROUGH 1251, TRANSMISSIONS (206-040-002-13) CONTAIN MAGNETIC PLUGS (9) (B-3659) AND (11) (B-3181). TORQUE to 75 — 125 INCH-POUNDS. EFFECTIVE 1252 AND SUBSEQUENT WITH TRANSMISSION (206-040-002-25), ELECTRIC CHIP DETECTORS (9A) (B-3188B) AND (11A) (B-3182B) ARE INSTALLED.

Figure 6-4. Main Transmission Assembly (206-040-002-13, -25, and -29) (Sheet 1 of 2)

1. Hydraulic Oil Pump
2. Gasket
3. Oil Pump
4. Bellcrank, Collective Control
5. Retainer Ring
6. O-Ring
7. Strainer
8. O-Ring
9. Magnetic Drain Plug (B-3659)
9A. Electric Chip Detector (B-3188B)
10. O-Ring
11. Magnetic Drain Plug (B-3181)
11A. Electric Chip Detector (B-3182B)
12. Oil Level Sight Gage
13. Air Duct
14. Clamp
15. Transmission
16. Bellcrank Support, Collective Control
17. Oil Cooler
18. Banjo Fitting
19. Driveshaft, Engine to Transmission
20. Oil Line, Filter to Oil Cooler
21. Oil Pressure Adjustment Screw
22. Spindle, Upper Pylon Support
23. Pressure Oil Line to Freewheeling Unit
24. Return Oil Line from Freewheeling Unit
25. Oil Filter Head
26. Filter Element
27. O-Ring
28. O-Ring
29. Filter Housing
30. Drain Valve
31. Oil Monitor
32. Radius Washer
33. Pylon Drag Pin Assembly
34. Isolation Mount Bolt
35. Pylon Plate
36. Isolation Mount
37. Isolation Mount Cover
38. Forward Pylon Mount
39. Pylon Mount Link
40. Washer
41. Nut, Pylon Support Spindle
42. Aft Pylon Mount
43. Pylon Stop

206040-11-4B

Figure 6-4. Main Transmission Assembly (206-040-002-13, -25, and -29) (Sheet 2 of 2)

a. Disconnect electrical lead from electric chip detector.

b. Press chip detector in, turn counterclockwise and remove from self-closing valve. Inspect chip detector immediately for metal particles. If any particles are found, place them in a clean container and retain until inspection is completed.

c. Inspect self-closing valve for leakage while still installed, but after electric chip detector is removed.

d. Remove lockwire and remove self-closing valve. Be prepared to catch oil that will drain from the component. Remove packings from self-closing valve and electric chip detector.

6-16. INSPECTION — CHIP DETECTORS.

a. Inspect electric chip detector for metal particles immediately upon removal. If any particles are found, make further investigation as outlined in paragraph 6-18.

b. Remove and discard packings from electric chip detector and from self-closing valve. Clean parts with cleaning solvent (item 12). Inspect electric chip detectors for stripped or damaged bayonet pins. Inspect self-closing valve for damaged threads.

6-17. INSTALLATION — CHIP DETECTORS.

a. Position packing on self-closing valve and lubricate with turbine oil (item 20). Install self-closing valve as follows:

(1) Install self-closing valve and torque to 75 to 125 inch-pounds.

(2) Safety self-closing valve with 0.032 inch lockwire (item 19).

b. Position new packing on electric chip detector. Lubricate packing with turbine oil (item 20). Insert electric chip detector into self-locking valve and turn clockwise to lock in place. Attach electrical lead to chip detector.

c. Fill component to proper level with turbine oil (item 20). Do not mix oils.

Note

For approved oils, refer to **Section I.**

d. Check for oil leaks on ground run-up.

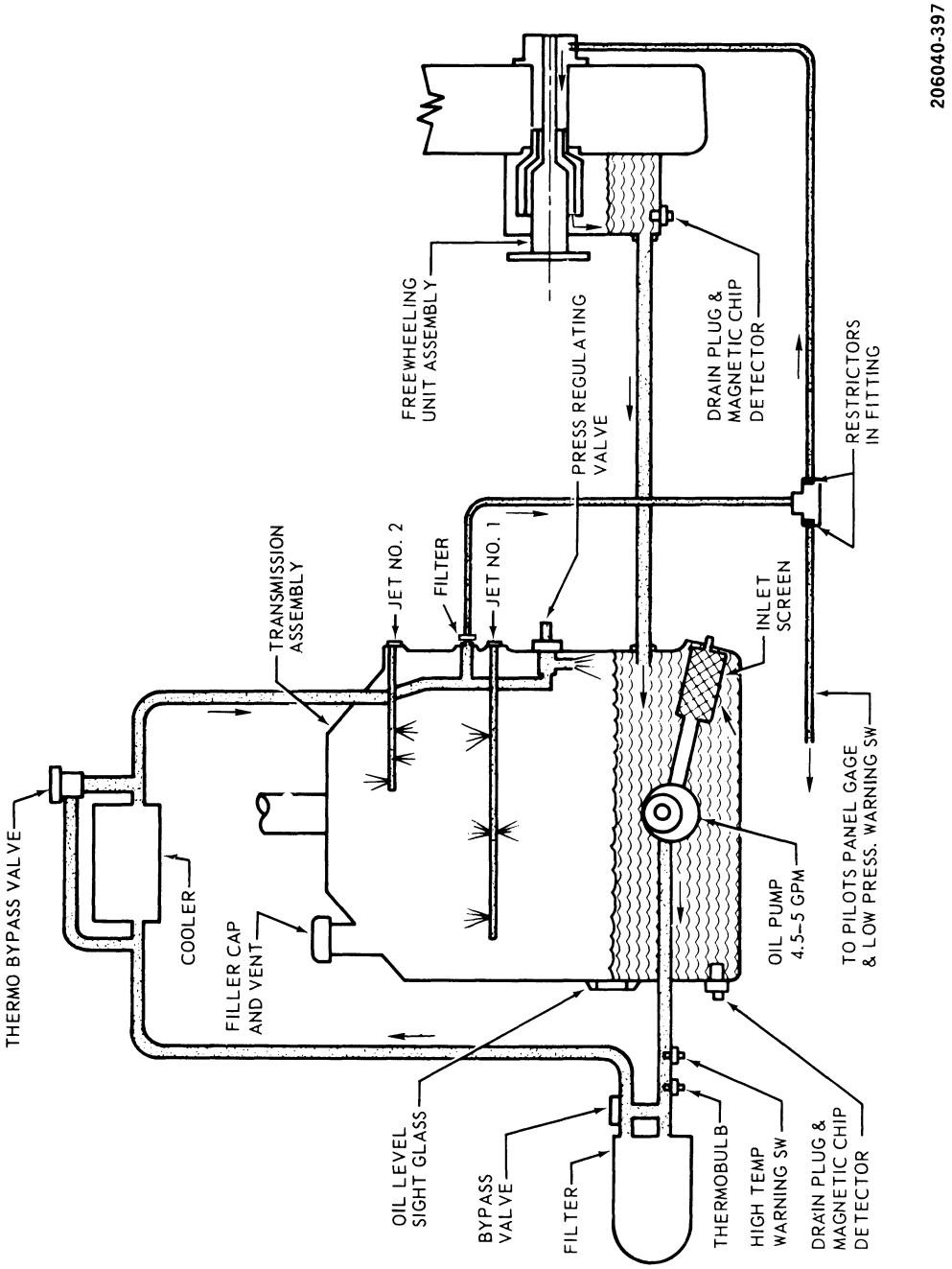

Figure 6-5. Transmission Oil System Schematic (206-040-002-5 and -15)

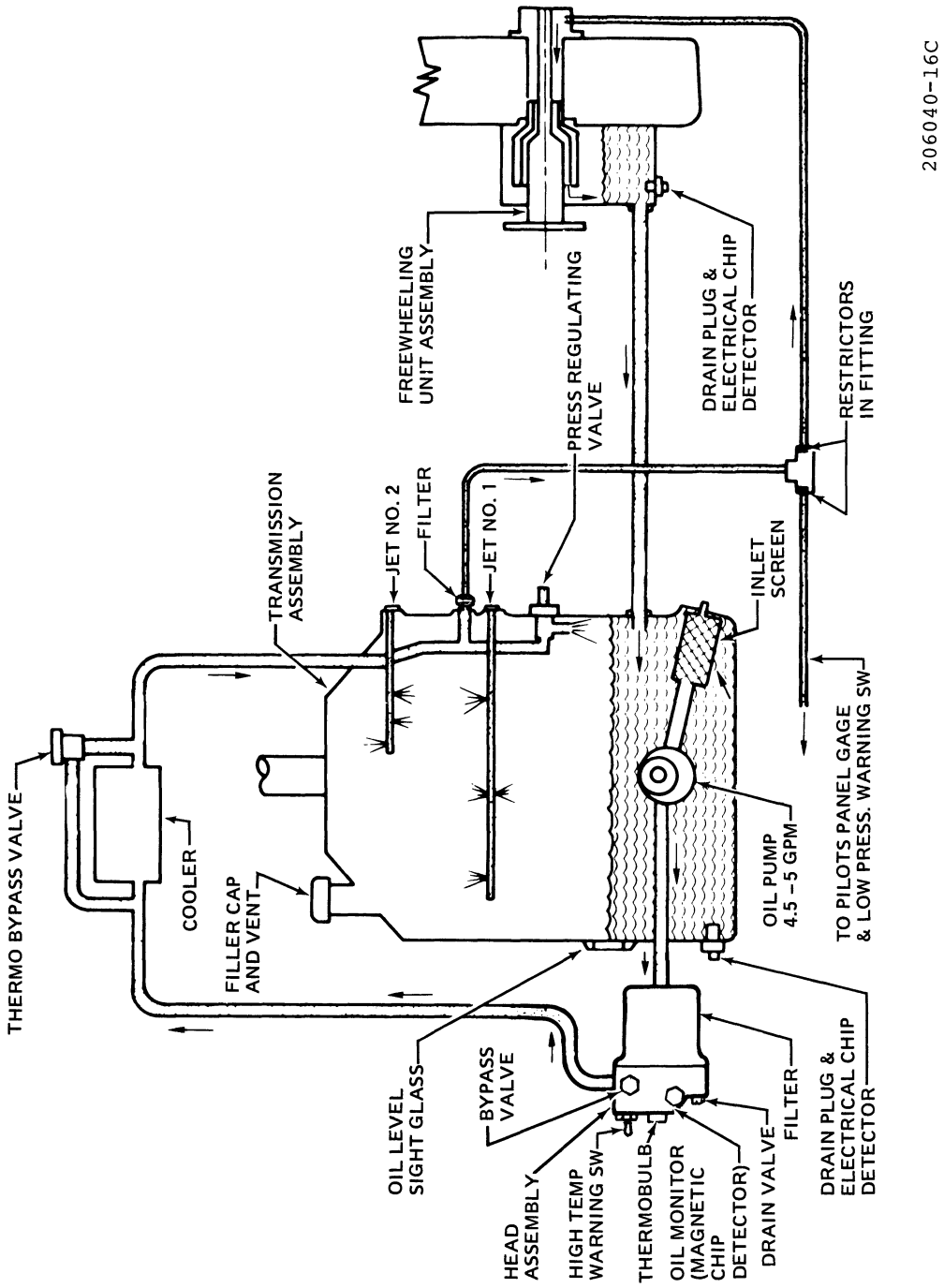

Figure 6-6. Transmission Oil System Schematic (206-040-002-13, -25 and -29)

6-18. SERVICEABILITY CHECK — POWER TRAIN SYSTEM.

6-18A. SERVICEABILITY CHECK — TRANSMISSION.

a. Drain lubricating oil from transmission and collect oil in a clean container. (Refer to paragraph 1-24 for oil draining procedure.)

b. Inspect, clean, and reinstall magnetic plug in oil monitor on 206-040-126 filter heads, electric chip detector, and self-closing valve. (Refer to paragraph 6-14)

c. Inspect drained oil for metal particles. If any particles are found, identify in accordance with paragraphs 6-21 and 6-21D . Perform corrective action required by table 6-2A .

d. Inspect oil filter bypass indicator for bypass indication.

e. Remove and inspect oil filter element to determine the extent of entrapped contaminants and for damage to element.

f. If gross contamination of filter element and indication of filter bypass are found, remove and replace oil cooler and identify as being contaminated. (Refer to paragraph 6-73) Thoroughly flush all oil lines leading to and from oil cooler and freewheeling unit which are to be reused. Remove and inspect freewheeling lube restrictor on left side of cabin roof.

g. If only minor contamination of filter element is found and bypassing of filter is not indicated, then the procedures outlined in step 6 are not required. Install new filter element. Remove and inspect oil jets and freewheeling lube resistor on left side of cabin roof.

h. Remove, inspect clean and reinstall oil screen. (Refer to paragraph 6-9 .)

i. Fill transmission to proper level with lubricating oil (item 406). (Refer to paragraph 1-24 servicing.)

j. Prepare helicopter for ground run-up. Ground run helicopter for 1 hour and accomplish the following at completion of run.

(1) Remove electric chip detectors, magnetic plug in oil monitor on 206-040-126 filter heads, and inspect for metal particles. (Refer to step c.) Torque oil monitor assembly 35 to 144 inch-pounds. and small hex magnetic plug 17 to 60 inch-pounds.

(2) Drain lubricating oil from transmission and collect oil in a clean container.

(3) Inspect lubricating oil for foreign material. (Refer to step c.)

(4) If this inspection is being conducted because of metal particle contamination and the number of metal particles has increased or if any particles are found which are large enough to be identified as chips from a gear or bearing, replace the transmission. If the number of particles has decreased and only minute particles are found, perform steps 1. through 10c. again. If particles are found, remove transmission and freewheeling unit to overhaul.

6-18B. SERVICEABILITY CHECK — FREEWHEELING ASSEMBLY.

a. Drain lubricating oil from freewheeling assembly and collect oil in a clean container.

CAUTION

If foreign particles are discovered in the freewheeling assembly, the transmission and mast bearing may be contaminated.

b. Inspect, clean, and reinstall electric chip detector and self-closing valve. (Refer to paragraph 6-14)

c. Inspect drained oil for metal particles. If any particles are found identifv in accordance with paragraph 6-21 and 6-21D . Perform corrective action required by table 6-2A .

d. Inspect transmission oil filter for metal particles. If any particles are found identifv in accordance with paragraphs 6-21 and 6-21D . Perform corrective action required by table 6-2A .

e. Thoroughly flush return line from freewheeling assembly to transmission. Flush hose with clean lubricating oil (item 20, **table 1-1**).

f. Fill transmission to proper level with lubricating oil (item 20, **table 1-1**). (Refer to paragraph 1-24 for servicing.)

g. Prepare helicopter for ground run-up. Ground run helicopter for 1 hour and accomplish the following at completion of run.

(1) Remove electric chip detector and inspect for metal particles. (Refer to steps b. and c.)

(2) Drain 1 quart lubricating oil from free-wheeling housing and collect oil in a clean container.

(3) Inspect lubricating oil for foreign material. (Refer to step c.)

(4) If this inspection is being conducted because of metal particle contamination and the number of metal particles has increased or if any particles are found which are large enough to be identified as chips from bearing, clutch or shaft, replace the freewheeling assembly. If the number of particles has decreased and only minute particles are found, release the helicopter for continued operation.

6-18C. SERVICEABILITY CHECK — TAIL ROTOR GEARBOX.

a. Drain lubricating oil from tail rotor gearbox and collect oil in a clean container. (Refer to paragraphs 6-19 and 6-20 for oil draining procedure.)

b. Inspect, clean, and reinstall electric chip detector and self-closing valve. (Refer to paragraph 6-14 .)

c. Inspect drained oil for metal particles. If any particles are found identify in accordance with paragraph 6-21 and 6-21D . Perform corrective action required by table 6-2A ..

d. Flush tail rotor gearbox with clean lubricating oil (item 20, **table 1-1**) one quart minimum.

e. Fill tail rotor gearbox to proper level with lubricating oil (item 20, **table 1-1**). (Refer to paragraph 1-25 for servicing.)

f. **Prepare helicopter for ground runup. Ground run helicopter for 1 hour and accomplish the following at completion of run.**

(1) Remove electric chip detector and inspect for metal particles. (Refer to step c.)

(2) Drain lubricating oil from tail rotor gearbox and collect oil in a clean container. (Refer to paragraph 1-25 for oil draining procedure.)

(3) Inspect lubricating oil for foreign material. (Refer to step c.)

(4) If this inspection is being conducted because of metal particle contamination and the number of metal particles has increased or if any particles are found which are large enough to be identified as chips, from a gear or bearing, replace the tail rotor gearbox. If the number of particles has decreased and only minute particles are found, fill the tail rotor gearbox with lubrication oil (item 20), and release for continued operation.

6-19. SERVICING. (Transmission 206-040-002-5 only.)

CAUTION

Do not fill above the center dot. Overfilling may cause foaming and loss of oil from the transmission.

A combination oil filler cap and vent is provided on the upper right side of the transmission. Oil level may be observed through a sight glass (9, figure 6-3 on the right side. Oil level must be visible in the sight glass. Verify actual presence of oil in sight glass. Just below the sight glass is a combination oil drain and magnetic plug (8). (Refer to **Section I,** Servicing Diagram for authorized lubricants. (See figure 6-5 for oil system schematic.)

Note

A special hose fitting may be used to drain the transmission, tail rotor gear box or freewheeling unit. Table 6-2 contains a listing of all drain plugs, magnetic plugs, chip detector plugs, their mating components, and the special fitting and drain hose assembly to be used with each.

The hose units listed are equipped with a standard hose length of 24 inches. A longer length hose may be obtained when ordering by adding a dash number to the drain hose unit part number which equals the length hose required in inches. For example: A (DB-148-50) hose unit would come equipped with a 50-inch hose.

Note

Operators who wish to obtain the drain hose units should determine the correct drain plug part number used in the components of their helicopter and from table 6-2. Order the corresponding drain hose units directly from: Technical Development Company, 305 South Chester Pike, Genolden, Pennsylvania, 19036, Telephone: (215) 583-9400. Attention Sales Department.

6-20. SERVICING. (Transmissions 206-040-002-13, -15, -25 and -29.)

CAUTION

Do not fill above center dot. Overfilling may cause foaming and loss of oil from the transmission.

A combination oil filler cap and vent is provided on the upper right side of the transmission. Oil level may be observed through a sight glass on the right side. Oil level must be visible in sight glass (12, figure 6-4). Verify actual presence of oil in sight glass. Forward of the sight glass are two combination oil drain and magnetic plugs (9, 9A and 11, 11A). (Refer to Servicing Diagram **Section I,** for authorized lubricants.) (See figure 6-6 for oil system schematic.)

Note

Refer to table 6-2 for special drain hose usage.

6-21. OIL CONTAMINATION — POWER TRAIN SYSTEM.

Particles of foreign material found in transmission or tail rotor gearbox electric chip detectors, transmission filter, freewheeling unit

Table 6-2. Oil Servicing Drain Hose Usage

MAGNETIC DRAIN PLUGS	CHIP DETECTORS	COMPONENT (Dash No.)	DRAIN HOSE
*B-148 (S)		Transmission (-5)	DB-148
A-3237		Transmission Filter (-13)	DB-771A
*B-3181 (L)		Transmission (15)	DB-3181
*B-3659 (S)			DB-3659
	*B-3182 (L)	Transmission (-13)	DB-3182
	*B-3188 (S)	(-13)	DB-3188
	*B-3228	(-5)	DB-3228
	B-3182B (L)	(-25)	DB-3182
	B-3188B (S)	(-25)	DB-3188
	B-3182B (L) B-3188B (S)	(-29)	
*B-758R		Tail Rotor Gear Box	DB-758
	*B-3225C		DB-3225
*B-758R		Freewheeling Unit	DB-758
	B-3225C		DB-3225

*Installation of indicating type magnetic chip detectors may be accomplished in accordance with Service Letter 206-133.

(L) Indicating Long Detector
(S) Indicating Short Detector

electric chip detector or in oil drained from the systems may indicate that one or more parts have failed, but they are not necessarily an indication that the component is no longer serviceable. The quantity, source, form and type of material found and the service history of the component must be taken into consideration. The service time accumulated since new or overhaul, previous failures and the type of operation are important factors in determining the further serviceability of the component. The particles may be steel, silver, aluminum, magnesium, bronze or phenolic. Refer to paragraph 6-21D for identification of foreign material.

6-21A. OIL CONTAMINATION — TRANSMISSION.

WARNING

When foreign particles are large enough to be identified as a part of a component of the transmission or mast bearing, replace the transmission or mast bearing as indicated by the location of the particle.

CAUTION

When transmission oil is contaminated, the oil cooler and freewheeling unit may also be contaminated. The transmission oil filter will normally preclude this, but if the oil filter has clogged enough to cause bypassing, then contamination of the above components and associated oil lines can occur.

a. Identify foreign particles found in the transmission oil. (Refer to paragraph 6-21D .)

b. For corrective action to be taken for contamination of transmission refer to Table 6-2A .

c. Remove and replace oil cooler and identify removed oil cooler as being contaminated.

d. Thoroughly flush all lines leading to and from oil cooler and freewheeling unit which are to be reused. Inspect and clean oil filter in supply line to freewheeling unit. (Located in fluid fitting at transmission.) Clean restrictor in oil supply line.

Note

Small hexagon magnetic plug should be torqued 30 to 45 inch-pounds.

e. Disassemble and clean oil filter housing and install new filter element. Remove, clean, and install magnetic plug in oil monitor. (Refer to paragraph 6-11)

f. Disassemble and clean freewheeling assembly.

6-21B. OIL CONTAMINATION — FREEWHEELING ASSEMBLY.

WARNING

When foreign particles are large enough to be identified as a part of a component of the freewheeling assembly, replace the freewheeling assembly.

CAUTION

If foreign particles are discovered in the freewheeling unit, the transmission may be contaminated.

a. Identify foreign particles found in the freewheeling assembly oil. (Refer to paragraph 6-21D .)

b. For corrective action to be taken for contamination of freewheeling unit, refer to Table 6-2A ..

6-21C. OIL CONTAMINATION — TAIL ROTOR GEARBOX

WARNING

When foreign particles are large enough to be identified as part of a component of the tail rotor gearbox, replace the gearbox.

a. Identify foreign particles found in the tail rotor gearbox oil. (Refer to pargraph 6-21D.)

b. For corrective action to be taken for contamination of tail rotor gearbox refer to table 6-2A .

6-21D. IDENTIFICATION OF FOREIGN MATERIAL — POWER TRAIN SYSTEM.

a. Inspect particles visually (refer to **figure 6-6A**). If particles cannot be recognized by color and hardness, perform tests outlined in steps b. through f.

b. The following equipment is required to perform tests:

(1) Permanent magnet.

(2) 50 percent by volume nitric acid and water solution.

(3) 5 percent by weight sodium chloride and water solution.

(4) Hydrochloric (muriatic) acid.

(5) Test tube.

c. Check particles with permanent magnet. The magnet will attract steel particles only.

d. Place a small quantity of 50 percent nitric acid solution in a test tube and add a particle of material to be tested. If particle does not dissolve, warm solution slightly. If particle dissolves after warming, add a few drops of 5 percent sodium chloride solution. If white precipitate forms in the test tube, the particle being tested is silver.

e. Place a small amount of hydrochloric (muriatic) acid in a test tube and add a particle of the material to be tested. If the solution releases bubbles rapidly, the particle disentegrates, and a black residue forms, the particle being tested is probably aluminum or magnesium. Place a small amount of nitric acid in a test tube and add a second particle of the same material. If there is no reaction with the nitric acid, the particle is probably aluminum.

f. Differentiate between copper and bronze and magnesium as follows: Place a small amount of nitric acid in a test tube and add a particle of the material to be tested. If a bright green color is formed in the acid, the particle is copper or bronze. If there is a rapid emission of bubbles when the particle is dropped into the acid, the particle is probably magnesium.

Note

Phenolic and aluminum do not react noticeably with nitric acid.

6-22. REMOVAL. (Transmissions 206-040-002-5 and -15.)

Note

The transmission may be removed with the main rotor mast and controls, rotor tachometer generator and hydraulic reservoir installed, or these parts may be removed prior to transmission removal.

a. Remove cowling for access to transmission. (Refer to **Section VIII.**)

b. Remove main rotor assembly. (Refer to **Section II.**) Remove flight controls from the mast. (Refer to **Section IV.**)

c. Remove main driveshaft (16, figure 6-3 .) (Refer to paragraph 6-42 .)

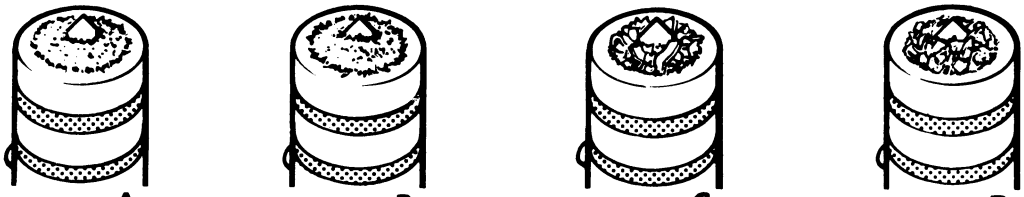

METAL PARTICLES CONTAMINATION — COMPONENT OIL

PARTICLE	QUANTITY AND/OR SIZE	ACTION REQUIRED	NOTES
Steel	Fuzz, fine hair-like particles. (See detail A.)	None	Result of normal wear. May have exaggerated appearance because of oil.
	Particles in splinter or granular form. (See details B and C.)	**Disassemble component, as required, to determine extent of damage. Replace component if necessary	Usually indicates failure.
	Thin flakes not exceeding 1/64 (0.015) inch in thickness and 1/16 (0.060) inch in length. Quantity not to exceed 10 flakes. (Refer to detail D.)	**Disassemble component as required, to determine extent of damage.	Small quantity may not indicate bearing failure.
	More than 10 flakes not exceeding 1/64 (0.015) inch in diameter and 1/16 (0.060) inch in length; and quantity of flakes exceeding the above dimensions.	**Disassemble component, as required to determine extent of damage. Replace component if necessary.	Usually indicates failure. May be pieces of bearings.
Aluminum or Magnesium	Particles in granular form, or like miniature lathe turnings.	**Disassemble compponent, as required to determine extent of damage.	May be result of use of these materials as mallets or drifts during assembly. May indicate wear of oil pump interior surfaces or abnormal interference.
Copper (Bronze)	Particles in granular form.	**Disassemble component, as required, to determine extent of damage. Replace component if necessary.	May indicate excessive wear of bearing cages as result of bearing failure.
Phenolic *Rubber		None	Results of the use of mallets and drifts during assembly or same as Copper (Bronze) above.

*From cut O-ring or gasket.
**Disassembly is an overhaul function.

204040-16-1R

Figure 6-6A. Particle contamination of transmission and tail rotor gearbox oil

Table 6-2A. Corrective Action for Contamination Found in Power Train Systems

TRANSMISSION			
PARTICLE MATERIAL	QUANTITY AND/OR SIZE	PROBABLE CAUSE	CORRECTIVE ACTION
Steel	Fuzz, fine hair-like particles.	Result of normal wear may have exaggerated appearance because of oil.	None
	Particles in splinter or granular form.	Usually indicates failure of gear or bearing.	Perform serviceability check Replace transmission/ freewheeling gearbox if necessary.
	Thin flakes not exceeding 1/64 inch in thickness and 1/16 inch in length. Quantity not to exceed 10 flakes.	Small quantity may not indicate bearing failure.	Perform serviceability check Replace transmission/ freewheeling gearbox if necessary.

Table 6-2A. Corrective Action for Contamination Found in Power Train Systems (Cont)

PARTICLE MATERIAL	QUANTITY AND/OR SIZE	PROBABLE CAUSE	CORRECTIVE ACTION
	More than 10 flakes not exceeding 1/64 inch in diameter and 1/4 inch in length.	Usually indicates failure of gear or bearing. If found on upper chip detector, usually indicates mast bearing failure.	If flakes are found on transmission upper chip detector only, replace mast bearing and perform serviceability check. If flakes are found anywhere else, replace transmission/ gearbox/freewheeling unit as applicable.
Aluminum or Magnesium	Particles in granular form or like miniature lathe turnings.	May be result of use of these materials as mallets or drifts during assembly. May indicate wear of oil pump interior surfaces.	Perform serviceability check Replace transmission/ gearbox if necessary.
Phenolic		Result of the use of phenolic mallets and drifts.	Perform inspection for source. Request assistance if necessary.
Copper	Particles in granular form.	May indicate excessive wear of bearing cages as a result of bearing failure.	Replace transmission/ gearbox. Disassembly will be required to determine extent of damage.
	Small amount in flake form.	Result of normal wear.	Perform serviceability check
Silver	Small amount of silver flakes.	Results of normal wear.	Perform serviceability check
Silver	Silver flakes with other metals.	May be result of internal failure.	Perform serviceability check Replace transmission/ gearbox if necessary.

CAUTION: WHEN A SMALL AMOUNT OF METAL PARTICLES ARE FOUND IN TRANSMISSION, FREEWHEELING ASSEMBLY, OR TAIL ROTOR GEARBOX COMPONENTS, OR THERE IS SOME DOUBT ABOUT THE SUITABILITY OF THE COMPONENT FOR CONTINUED SERVICE, A SERVICEABILITY CHECK SHALL BE CONDUCTED. SERVICEABILITY CHECKS ARE A SPECIFIC REQUIREMENT WHEN DIRECTED IN THE TROUBLESHOOTING PROCEDURES OR THIS TABLE.

d. Remove collective control bellcrank (4, figure 6-3). Remove cotter pin, nut, washers and bolt securing bellcrank in support (13) mounted on front of transmission case and remove bellcrank.

e. Remove air duct (10) and oil cooler (14) with clamp (11).

f. Remove tachometer generator. Remove attaching nuts and washers and remove tachometer generator from mounting pad on forward side of hydraulic pump (1).

Note

Tachometer generator and hydraulic pump may be removed together as a unit from accessory drive pad on transmission oil pump as described in subparagraph g.

g. Remove hydraulic pump. (Refer to Section V.) Disconnect hydraulic pressure, return and vent lines. Disconnect oil lines from transmission to freewheeling unit. Cap all openings. Disconnect electrical wiring. Remove air duct from hydraulic pump. Remove attaching nuts and washers and lift hydraulic pump from mounting studs.

h. Install mast nut on top of rotor mast. Attach clevis with bolt to eye of mast nut and attach hoist. If main rotor mast has been removed while transmission is mounted on helicopter, attach hoisting ring (T103140) to top of transmission and attach hoist. Take up slack in hoist cable and apply only sufficient tension to support transmission when pylon supports and drag pin are disconnected.

i. Disconnect pylon drag pin assembly (25) by removing bolt (26) from drag link and isolation mount (28).

j. Remove nuts and washers (33 and 32) and cotter pins from pylon support spindles (19).

CAUTION

Do not remove shims under pylon support mount (30 and 34) or isolation mount cover (29). These shims are selected on assembly to properly align transmission with engine. When pylon support fitting or the isolation mounts are removed from deck, check that shims are bonded in place. If shims are not bonded, identify shims for reinstallation in same location. Mixing shims will result in misalignment between engine and transmission.

k. Remove bolt attaching forward leg of one pylon mount link (31) and pylon support fitting (30). Swing pylon mount link (31) outboard and slide support spherical bearing from support spindle (19). Shift transmission sideways away from free pylon support and slide support spindle out of pylon support spherical bearing.

l. Check to determine that all flight controls, oil lines, electrical wiring and other attachments are disconnected from transmission. Activate hoist and lift transmission carefully from airframe while guiding transmission to clear components installed on upper part of helicopter.

m. Remove and store oil filler cap, (1, figure 6-33) with lanyard attached, in a sealed plastic bag, and install dehydrator (T102102), while transmission is removed.

Note

An appropriate log book entry must be made upon installation of dehydrator.

6-23. REMOVAL. (Transmission 206-040-002-13, -25, and -29.)

Note

The transmission may be removed with the main rotor mast and controls, rotor tachometer generator and hydraulic reservoir installed, or these parts may be removed prior to transmission removal.

a. Remove cowling for access to transmission. (Refer to Section VIII.)

b. Remove main rotor assembly. (Refer to Section II.) Remove flight controls from the mast. (Refer to Section IV.)

c. Remove main drive shaft (19, figure 6-4). (Refer to paragraph 6-42.)

d. Remove collective control bellcrank (4, figure 6-4). Remove cotter pin, nut, washers and bolt securing bellcrank in support (16), mounted on front of transmission case and remove bellcrank.

e. Remove air duct (13) and oil cooler (17) with clamp (14).

f. Remove tachometer generator. Remove attaching nuts and washers and remove tachometer generator from mounting pad on forward side of hydraulic pump (1).

Note

Tachometer generator and hydraulic pump may be removed together as a unit from accessory drive pad on transmission oil pump as described in subparagraph g.

g. Remove hydraulic pump (1). (Refer to Section V.) Disconnect hydraulic pressure, return and vent lines. Disconnect oil lines from transmission to freewheeling unit. Cap all openings. Disconnect electrical wiring. Remove air duct from hydraulic pump. Remove attaching nuts and washers and lift hydraulic pump from mounting studs.

h. Install mast nut on top of rotor mast. Attach clevis with bolt to eye of mast nut and attach hoist. If main rotor mast has been removed while transmission is mounted on helicopter, attach hoisting ring (T103140) to top of transmission and attach hoist. Take up slack in hoist cable and apply only sufficient tension to support transmission when pylon supports and drag pin are disconnected.

i. Disconnect pylon drag pin assembly (33) by removing bolt (34) from drag pin assembly and isolation mount (36).

j. Remove nuts and washers (41 and 40) and cotter pins from pylon support spindles (22).

CAUTION

Do not remove shims under pylon support fittings (38 and 42) or isolation mount cover (37). These shims are selected on assembly to properly align transmission with engine. When pylon support fitting or the isolation mounts are removed from deck, check that shims are bonded in place. If shims are not bonded, identify shims for reinstallation in same location. Mixing shims will result in misalignment between engine and transmission.

k. Remove bolt attaching forward leg of one pylon support link (39) and pylon support fittings (38 and 42). Swing pylon support link (39) outboard and slide support spherical bearing from support spindle (22). Shift transmission sideways away from free pylon support and slide support spindle out of pylon support spherical bearing.

l. Check to determine that all flight controls, oil lines, electrical wiring and other attachments are disconnected from transmission. Activate hoist and lift transmission carefully from airframe while guiding transmission to clear components installed on upper part of helicopter.

m. Remove and store oil filler cap, (1, figure 6-33) with lanyard attached, in a sealed plastic bag, and install dehydrator (T102102), while transmission is removed.

Note

An appropriate log book entry must be made upon installation of dehydrator.

6-24. INSPECTION — AFTER TRANSMISSION REMOVAL.

a. Inspect pylon support links (31, figure 6-3 or 39, figure 6-4) for nicks, scratches and damage. Dress out minor nicks and scratches. Touch-up bare spots with epoxy polyamide primer (item 56). (Refer to paragraph 6-33 and 6-34 for inspection and repair.)

b. Inspect pylon support fittings (30 and 34, figure 6-3 or 38 and 42, figure 6-4) for nicks, scratches, cracks and damage. (Refer to paragraph 6-33 and 6-34 for inspection and repair.)

c. Inspect spherical bearings in pylon support links and fittings for smoothness and security. (Refer to paragraph 6-33.)

d. Remove isolation mount cover (29, figure 6-3 or 37, figure 6-4). Inspect isolation mount for condition of rubber and for security. Replace mount if deterioration is evident. (Refer to paragraphs 6-38 for inspection.)

e. Retorque the following items after transmission removal.

(1) Torque nuts and bolts attaching pylon support mounts (30 and 34, figure 6-3 or 38 and 42, figure 6-4) and installed pylon support link (31, figure 6-3 or 39, figure 6-4) as follows:

Note

For torque of forward and aft pylon support mount to roof and installation nuts of isolation mount (28, figure 6-3 or 36, figure 6-4) pull headliner from cabin ceiling. Position a helper on cabin roof to hold installed bolts while a man inside cabin applies the correct torque.

(a) Pylon support links (31, figure 6-3 or 39, figure 6-4) to mount (30 and 34, figure 6-3 or 38 and 42, figure 6-4) bolts and nuts to a torque of 468 to 516 inch-pounds.

Note

Leave one forward bolt loose to allow installation of transmission.

(b) Forward and aft support mount (30 and 34, figure 6-3 or 38 and 42, figure 6-4) bolts and nuts to 120 to 160 inch-pounds.

(c) Tighten isolation mount (28, figure 6-3 or 36, figure 6-4) attaching mount bolts to a torque of 50 to 70 inch-pounds.

6-25. INSTALLATION. (Transmission 206-040-002-5 and -15).

Note

Remove dehydrator (T102102) and reinstall filler cap (1, figure 6-33), if installed.

a. Install main rotor mast in transmission, if removed. (Refer to paragraph 6-30.)

b. Attach hoist to mast nut and lift assembly, guiding carefully to avoid damage. Position transmission with support spindles (19, figure 6-3) directly above spherical bearings of pylon support links (31).

c. Place one radius washer (24) on each support spindle (19) with chamfered face inboard.

d. Remove bolt attaching forward leg of one pylon support link (31) to forward pylon mount (30).

e. Pull top of loosened pylon support outboard, lower transmission to position drag link stop, located on lower side of pylon drag pin assembly (25), into hole in pylon stop (35). Guide pylon drag pin assembly (25) to connecting position with isolation mount (28).

f. Position support spindle (19) in spherical bearing of secured pylon support link, while holding support link with unattached leg, far enough to one side to permit free movement of transmission.

g. Install washer and nut (32 and 33) on positioned spindle. Tighten nut finger tight.

h. Position opposite spindle in spherical bearing of opposite pylon link, and install washer and nut.

i. Install bolt (26) through pylon drag pin assembly (25) and isolation mount (28). Install washers and nut. Torque nut to 480 to 690 inch-pounds and secure with cotter pin.

j. Position forward leg of pylon link (31) in mounting position with forward pylon mount (30) and install bolt, washers and nut. Torque nut to 468 to 516 inch-pounds.

k. Torque spindle nuts (33) 50 to 290 inch-pounds. Install cotter pins.

l. Install hydraulic pump (1) on mounting pad on oil pump (3). (Refer to Section V.)

m. Install tachometer generator on mounting pad on forward side of hydraulic pump (1).

n. Connect hydraulic lines, oil lines, electrical wiring and air duct (10) to oil cooler and clamp (11). (Refer to Section V.)

o. Install collective control bellcrank (4) and support (13) on forward side of transmission.

p. Install swashplate. (Refer to Section IV.)

q. Install main rotor assembly. (Refer to Section II.)

r. Install flight controls on main rotor mast and connect all flight controls. (Refer to Section IV.)

s. Install main drive shaft (16). (Refer to paragraph 6-46.)

t. Perform transmission operational check. (Refer to paragraph 6-26A .)

u. Install and close cowling. (Refer to **Section VIII.**)

6-26. INSTALLATION. (Transmission 206-040-002-13 and -25, and -29.)

Note

Remove dehydrator (T102102) and reinstall filler cap (1, figure 6-33). When replacing 206-040-002-5, -13 or -15 transmission with a -25, or -29 transmission, correct helicopter weight and balance record for the following: (Refer to **Section I.**)

TRANSMISSION REPLACED	WEIGHT	ARM	MOMENT
206-040-002-5	+11.3	110	1243
206-040-002-13	+11.1	110	1221
206-040-002-15	+11.3	110	1243

a. Install main rotor mast in transmission, if removed. (Refer to paragraph 6-30.)

b. Attach hoist to mast nut and lift assembly, guiding carefully to avoid damage. Position transmission with support spindles (22, figure 6-4) directly above spherical bearings of pylon support links (39).

c. Place one radius washer (32) on each support spindle (22) with chamfered face inboard.

d. Remove bolt attaching forward leg of one pylon support link (39) to forward pylon mount (38).

e. Pull top of loosened pylon support outboard, lower transmission to position drag link stop, located on lower side of pylon drag pin assembly (33), into hole in pylon stop (43). Guide pylon drag pin assembly (33) to connecting position with isolation mount (36).

f. Position support spindle (22) in spherical bearing of secured pylon support link, while holding support link with unattached leg, far enough to one side to permit free movement of transmission.

g. Install washer and nut (40 and 41) on positioned support spindle. Tighten nut finger tight.

h. Position opposite spindle in spherical bearing of opposite pylon link, and install flat washer and nut.

i. Install bolt (34) through pylon drag pin assembly (33) and isolation mount (36). Install washers and nut. Torque nut 480 to 690 inch-pounds and secure with cotter pin.

j. Position forward leg of pylon link (39) in mounting position with forward pylon mount (38) and install bolt, washers and nut. Torque nut to 468 to 516 inch-pounds.

k. Torque spindle nuts (41) 50 to 290 inch-pounds. Install cotter pins.

l. Install hydraulic pump (1) on mounting pad on oil pump (3). (Refer to **Section V.**)

m. Install tachometer generator on mounting pad on forward side of hydraulic pump (1).

n. Connect hydraulic lines, oil lines, electrical wiring and air duct (13) to oil cooler (17) and clamp (14). (Refer to **Section V.**)

o. Install collective control bellcrank (4) and support (16) on forward side of transmission.

p. Install swashplate. (Refer to **Section IV.**)

q. Install main rotor assembly. (Refer to **Section II.**)

r. Install flight controls on main rotor mast and connect all flight controls. (Refer to Section IV.)

s. Install main driveshaft (19). (Refer to paragraph 6-46 .)

t. Perform transmission operational check. (Refer to paragraph 6-26A)

u. Install and close cowling. (Refer to **Section VIII.**)

6-26A. TRANSMISSION OPERATIONAL CHECK.

a. Perform ground run-in cycle for 20 minutes. Monitor indicators to ensure oil pressure and temperature stabilize and remain within limits. Adjust pressure as required.

b. After shutdown accomplish the following requirements.

(1) Remove and inspect electric chip detectors for metal particles. If metal particles are found, investigate to determine cause. Install electric chip detector.

(2) Remove and inspect oil filter for metal particles.

(3) Install cleaned oil filter.

(4) Visually inspect oil at sight gage for discoloration and contamination.

(5) Inspect transmission and attached components for oil leaks.

c. Service transmission.

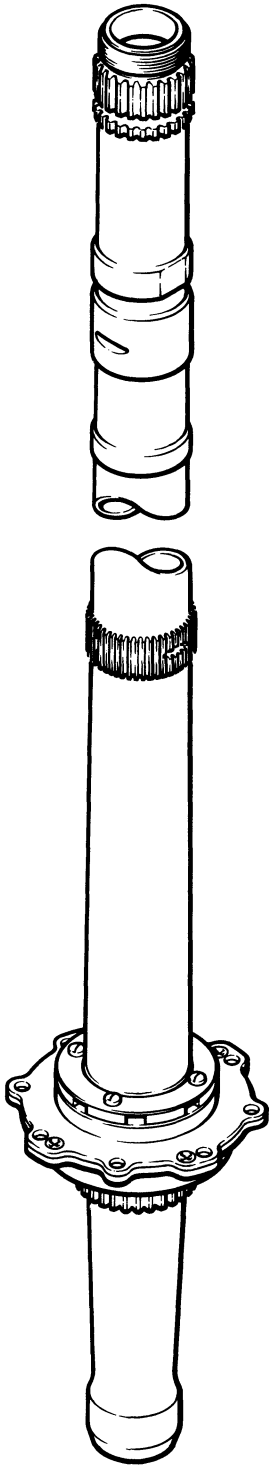

206040-17

Figure 6-7. Main Rotor Mast Assembly

6-27. MAIN ROTOR MAST.

6-28. REMOVAL – MAIN ROTOR MAST.

Note

Main rotor mast may be removed from transmission while transmission is mounted on helicopter. (See figure 6-7). When transmission is to be removed from helicopter, the rotor mast may be removed after transmission is removed.

a. Remove cowling for access to transmission and flight controls. (Refer to **Section VIII.**)

b. Remove main rotor assembly. (Refer to **Section II.**)

c. Remove stud nuts attaching mast upper bearing liner and bearing, seal plate and swashplate support to top of transmission. (Refer to **Section IV.**)

d. Remove flight controls from mast. (Refer to **Section IV.)**

e. Lift main rotor mast assembly from transmission.

f. Cover opening in top of transmission to prevent foreign matter from falling into transmission.

g. Clean all parts of mast and splines for inspection with solvent (item 12, **table 1-1**).

6-29. INSPECTION – MAIN ROTOR MAST.

a. Visually inspect all parts of mast for wear and damage.

b. Inspect splines for chipping, cracks or wear. Dress splines, if necessary, to remove burrs or scratches with an India stone (item 95, **table 1-1**).

c. For overhaul procedure refer to **Section VI**, Part 2.

6-30. INSTALLATION – MAIN ROTOR MAST.

Note

Before installing main rotor mast assembly, pour one quart of turbine oil (item 20, table 1-1) into top of transmission to lubricate gears and splines with a thin coating of oil.

a. Position O-ring in recess in top of case. (See figure 6-46, item 31 or 6-47, item 9.)

b. Install assembled main rotor mast through opening in top of transmission. Line up lower mast spline teeth with spline teeth in planetary spider, guide end of mast into lower mast bearing and position upper mast bearing liner over mounting studs in top case. Apply sealant (item 115) around periphery of the mast plate/liner and the transmission top case. Secure mast with washers and nuts. Torque nuts 100 to 140 inch-pounds.

Note

Spacers are for shipping purposes only.

c. Install swashplate assembly. (Refer to **Section IV.**)

d. Install main rotor assembly. (Refer to **Section II.**)

e. Install flight controls. (Refer to **Section IV.**)

f. Install cowling. (Refer to **Section VIII.**)

6-31. PYLON SUPPORT LINKS.

6-32. REMOVAL – PYLON SUPPORT LINKS.

a. Remove transmission or use adequate overhead hoist for transmission support.

b. Remove bolts, nuts and washer attaching pylon support links (31, figure 6-3 or 39, figure 6-4) to forward and aft pylon support mount (30 and 34, figure 6-3 or 38 and 42, figure 6-4).

c. Remove bolts, nuts and washers securing forward and aft pylon support fittings (30 and 34, figure 6-3 or 38 and 42, figure 6-4) to roof structure.

CAUTION

Do not remove shims under pylon support mounts (30 and 34, figure 6-3 or 38 and 42, figure 6-4). If shims are not bonded identify for reinstallation in same location. Loss or mixing of shims will require an overhaul maintenance facility for transmission alignment.

6-33. INSPECTION – PYLON SUPPORT LINKS.

Note

Pylon support links and pylon link support mounts should be replaced in accordance with SB 206-01-73-6.

a. Clean all parts with cleaning solvent (item 12, table 1-1). Dry with clean filtered air.

b. Deleted.

c. Inspect pylon support links and mounts for nicks, scratches, cracks and damage. Dress out minor nicks and scratches with No. 320 or 400 abrasive paper (item 15, table 1-1). Touch-up bare spots with zinc chromate primer (item 80, table 1-1).

d. Inspect bearing (2, figure 6-8) in pylon support link for smoothness of operation, looseness and general condition. Maximum allowable axial play in bearing is 0.010 inch. (See figure 6-8 sheet 2, for bearing replacement.)

e. Inspect bushings (3) in pylon support link for excessive inside diameter (ID). Maximum allowable I.D. shall not exceed 0.438 inch. Inspect for scoring on I.D. of bushing. Scoring shall not exceed 0.002 inch. (See figure 6-8, Note 2.)

f. Inspect bearing (1, figure 6-9) pylon support mount for smoothness of operation, looseness and general condition. Maximum allowable axial play in bearing is 0.010 inch. (See figure 6-9 for bearing replacement.)

g. Inspect pylon support links in the shot peen area of the bearing (2, figure 6-8) for damage. No damage is permitted within 0.10 inch around edge of bearing. The remainder of the apex lug is allowed damage up to 0.010 inch deep.

h. Inspect the pylon links in the area between the bearing and the bushing for damage. Maximum allowable damage is 0.020 inch in depth.

i. Inspect pylon support mount (1, figure 6-9) for damage. No damage is permitted within 0.10 inch around the edge of the bearing (2). The remainder of the mount is allowed damage up to 0.010 inch deep maximum.

CAUTION

The pylon support fittings are shimmed and bonded to the fuselage structure and maintain alignment of the engine and transmission. If misalignment is suspected then it must be checked and corrected if misaligned.

6-34. REPAIR – PYLON SUPPORT LINKS.

a. Replace pylon support links (31, figure 6-3 or 39, figure 6-4 found defective by Fluorescent Penetrant Inspection.

b. Replace bearings (2, figure 6-8) in pylon support links (1), and bearings (2, figure 6-9) in mount (1) which do not meet inspection requirements.

c. Press staked bearing from support link or mount.

d. Remove any burr edges visible on the bearing housing by use of No. 320 or 400 grit abrasive cloth (item 15, table 1-1.)

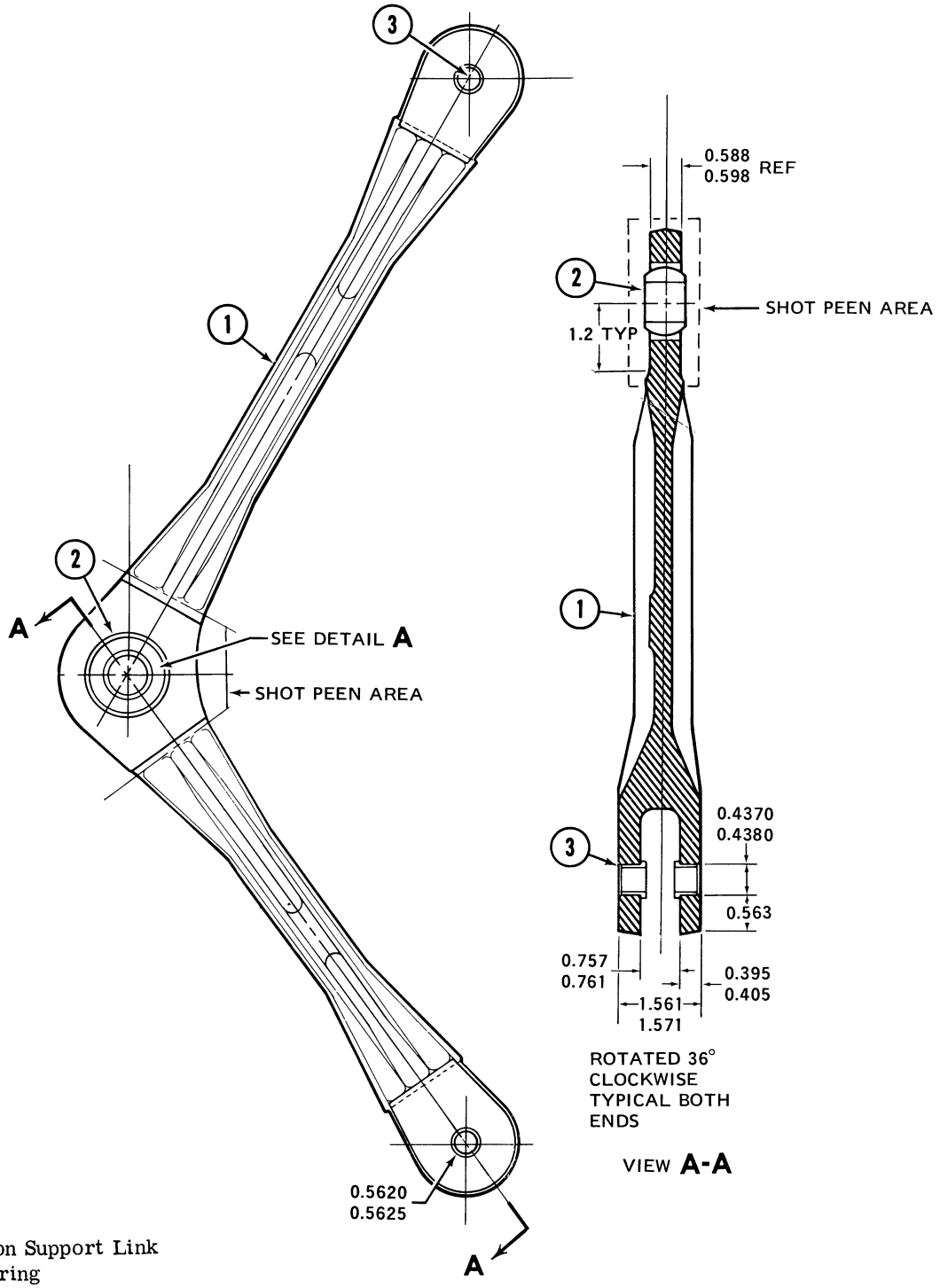

1. Pylon Support Link
2. Bearing
3. Bushing

206031-30-1

Figure 6-8. Pylon Support Link Assembly (206-031-589) (Sheet 1 of 2)

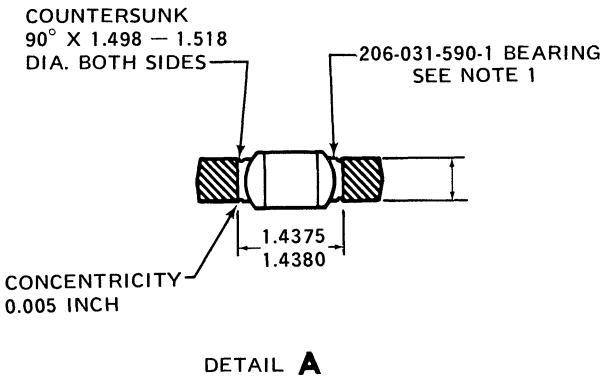

NOTES

1. Roll stake bearing and bond with AAV15-10 (#75) adhesive (item 83, table 1-1) to mating surfaces of link and bearing. (Refer to paragraph 6-34C.) Do not heat cure above 200°F (93°C).

2. Bushings (206-031-564-3) pressed and bonded with unreduced zinc chromate (item 80, table 1-1) to faying surfaces. Bushing alignment shall be within 0.001 inch of machined bushing hole in link assembly.

206031-30-2

Figure 6-8. Pylon Support Link Assembly (206-031-589) (Sheet 2 of 2)

e. Pylon support link bearing (2, figure 6-8) may be replaced with use of roll stake tool (T101584). Pylon support mount bearing (2, figure 6-9) may be replaced with use of roll stake tool (T101530). Replacement bearings shall only be bonded with adhesive (item 83, table 1-1). Prepare pylon support link or mount for adhesive application as follows:

(1) Clean surfaces to receive adhesive of all grease, oil, dirt and other contamination. Clean with safety solvent (item 84, table 1-1) or an anaerobic primer (item 85, table 1-1).

CAUTION

Use with adequate ventilation. Avoid prolonged breathing of vapors. Avoid contact with skin.

(2) Sand all surfaces to receive adhesive with No. 400 grit abrasive paper (item 15, table 1-1) or scotch brite abrasive pads, type A (items 9, table 1-1).

(3) Apply a generous amount of anaerobic primer (item 85, table 1-1) to all surfaces receiving adhesive and thoroughly wipe clean with clean cheesecloth.

(4) Reapply a light amount of primer to all surfaces receiving the adhesive and allow the primer to dry for 5 minutes. Do not wipe primer off. A slight discoloration may occur, but will not interfere with the retaining capabilities of the adhesive.

(5) Using a cotton swab soaked with adhesive (item 83, table 1-1) apply a generous amount to all mating surfaces receiving adhesive. Caution shall be observed to prevent contamination.

CAUTION

It is absolutely mandatory that the adhesive be kept out of the bearing itself as this will cause seizing and a resulting malfunction. Should this condition occur, it will show itself after the curing.

(6) Excess adhesive shall be carefully removed to prevent running to other surfaces.

Note

Use care not to remove more adhesive than that which is excess.

f. Press bearings into pylon link support or mount with suitable tools. (Refer to subparagraph g (3) Notes.)

Note

Ensure large flat side of tool (T101584) mandrel is up for first staking operation.

Staking must be accomplished within 30 minutes after application of adhesive to mating surfaces of parts. Never stake bearings after curing of adhesive.

g. Stake or restake bearing using roll stake tool (T101584) for pylon support link bearing and roll stake tool (T101530) for pylon support mount bearing as follows:

(1) Center bearing assembly on suitable drill press with bearing supported on anvil.

(2) With drill press turning at 250 to 350 RPM, apply sufficient hand pressure to drill press feed in 10 second increments so roller wheels of the spinning tool roll without interruption around the pregrooved bearing outer race. After 10 seconds, inspect for correct displacement of outer race metal into hole chamfer of link or fitting. (See figures 6-8 or 6-9.)

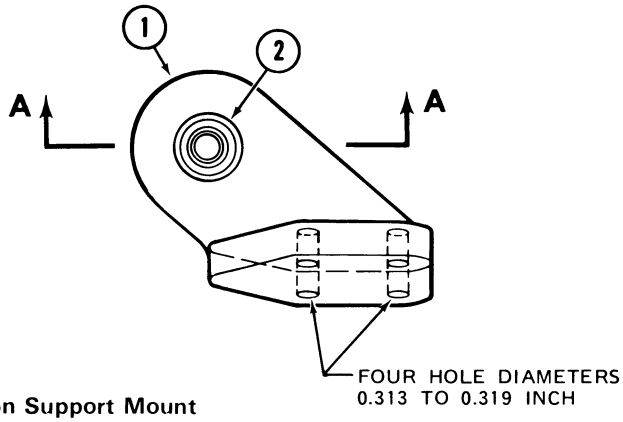

1. Pylon Support Mount
2. Bearing

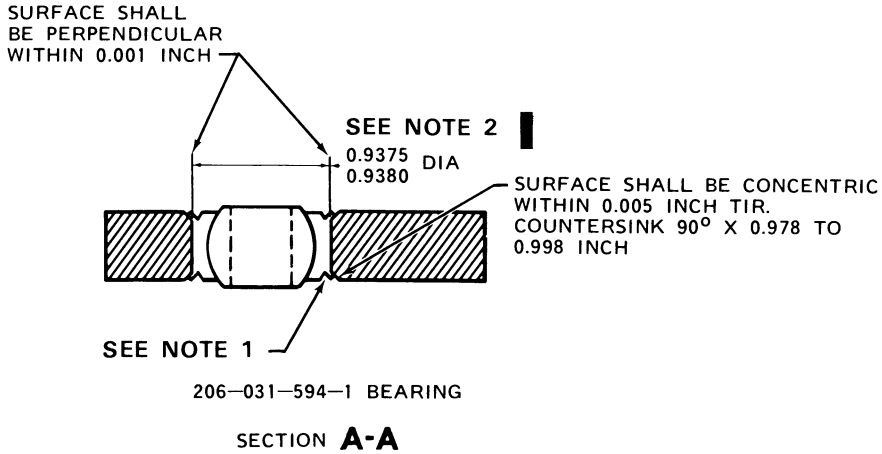

NOTE

1. Roll stake bearing and bond with AAV15-10 (No. 75) adhesive (item 83, table 1-1) to mating surfaces of link and bearing. Do not heat cure above 200°F (93°C).

2. Replace support fitting if bearing bore diameter is 0.9385 or greater.

206031-31C

Figure 6-9. Pylon Support Mount Assembly

(3) Turn assembly over and repeat staking operation on opposite side.

Note

Pylon support link bearing (206-031-590-1) concentricity with link surface must be with 0.005 inch T.I.R. Bearing rotational starting torque to be 0.5 to 1 inch-pounds.

Pylon support link bearing (SBS24ATC46) misalignment torque of 0 to 1 inch-pounds. If bearing is to tight after staking, spin inner race until proper torque is obtained. Maximum bearing end play is 0.002 inch after loosening, spinning speed to be 80 to 100 RPM.

Pylon support mount bearing (SBSH14ATC30) has no check requirement for misalignment or break out torque.

Pylon support mount bearing (206-031-591-1) concentricity with mount surface must be within 0.005 inch T.I.R.

h. Within 40 minutes following staking, heat cure bearing at one of the following temperatures.

TEMPERATURE	TIME	LIMITS
150°F (66°C)	3 Hours	Minimum Temperature
175°F (79°C)	1 Hour	
200°F (93°C)	15 Minutes	Maximum Temperature

i. Inspect bearing under ultra-violet light for traces of adhesive on bearing surfaces. The residual traces of adhesive will be brightly visible at the parting line indicating use of sealant. Inspect bearing for freedom of movement. Any seizing noted would be caused by adhesive traces.

j. Pylon support link bushings (3, figure 6-8) may be replaced as follows:

(1) Clean surfaces of new bushing and support link bushing holes.

(2) Apply unreduced zinc chromate primer (item 80, table 1-1) to faying surfaces.

(3) Press bushing into support link. Line ream bushing to 0.4370 to 0.4380 inch diameter.

k. Blend damaged areas smooth on pylon support mounts and fitting with No. 400 grit abrasive paper (item 15, table 1-1). Do not exceed the limits specified in paragraph 6-33g. through j.

(1) Apply brush cadmium plate (item 58, table 1-1) to repaired areas.

(2) Apply one coat of zinc chromate primer (item 80, table 1-1).

6-35. INSTALLATION – PYLON SUPPORT LINKS.

a. Bond pylon support mount shims to deck using adhesive (item 51, table 1-1) if found loose during removal of fitting as follows:

(1) Clean surfaces to be bonded with naphtha (item 36, table 1-1) or methyl-ethyl-ketone (item 17, table 1-1).

(2) Abrade surfaces lightly with 400 grit sandpaper (item 90, table 1-1). Remove sanding residue with one of the above solvents. Wipe parts dry with a clean cloth before solvent evaporates.

(3) Mix adhesive (item 51, table 1-1) by adding 8 parts activator A to 100 parts to base resin. Apply mixture to shims and fuselage surface.

Note

Adhesive pot life is 15 to 30 minutes. Cure time is 12 hours at 70° to 90°F (21° to 32°C) and maximum strength is obtained in 6 to 7 days.

b. Install forward and aft pylon support mounts (30 and 34, figure 6-3 or 38 and 42, figure 6-4) to service deck using bolts, washers, and nuts. Torque bolts and nuts to 120 to 160 inch-pounds.

c. Attach pylon support links (31, figure 6-3 or 39, figure 6-4 to support mounts with bolts, washers, and nuts. Torque nuts to 468 to 516 inch-pounds.

d. Install inboard pylon support spindle radius washer (24, figure 6-3 or 32, figure 6-4) on upper pylon support spindle (19, figure 6-3 or 22, figure 6-4). Position pylon support link (31, figure 6-3 or 39, figure 6-4) on to pylon support spindle.

e. Install outboard pylon support spindle radius washer (32, figure 6-3 or 40, figure 6-4) and nut (33, figure 6-3 or 41, figure 6-4). Torque nut to 50 to 290 inch-pounds and install cotter pin.

f. Seal pylon support mounts (30 and 34, figure 6-3 or 38 and 42, figure 6-4) to service deck with sealant (item 7, table 1-1).

6-36. TRANSMISSION ISOLATION MOUNT.

Note

If isolation mount is replaced due to bond line separation or loss of integrity of flexing element, the engine to transmission driveshaft shall be removed, disassembled, and inspected (refer to paragraph 6-40).

6-37. REMOVAL – ISOLATION MOUNT.

a. Install lift hook or clevis on main rotor mast nut and support transmission with hoist to prevent tipping of transmission.

b. Remove cotter pin and nut, and remove isolation mount bolt (26, figure 6-3 or 34, figure 6-4) which passes through pylon drag link and isolation mount.

c. Remove four isolation mount bolts that secure mount to cabin roof.

d. Remove transmission isolation mount (28, figure 6-3 or 36, figure 6-4) from cabin roof.

6-38. INSPECTION – TRANSMISSION ISOLATION MOUNT. The following visual inspections may be accomplished while the mount is installed on the helicopter or after it is removed. For detailed inspection procedures after disassembly of the mount, refer to overhual, Section IV, Part 1.

CAUTION

During any inspection period when cleaning engine or transmission gearbox area, make certain the boots are in place on the mount to protect the elastomer from cleaning fluid and solvent contamination.

Note

If inspections are to be performed while the mount is installed on the helicopter it will be necessary to remove components necessary to gain access to the mount.

a. Remove protective neoprene cover (top boot).

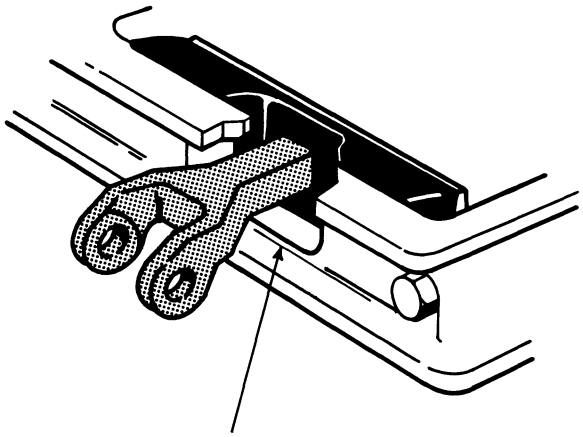

THE ALUMINUM RAIL AROUND THE OPENING IS A CRITICAL AREA ALSOI BOTH TOP AND BOTTOM.

206040-112

Figure 6-10. Transmission Isolation Mount-Cut-Away Section-Critical Inspection Areas

b. Visually inspect metal parts of the mount for evidence of cracks or damage which imply failure. See shaded portions of figure 6-10 for critical areas. Replace complete mount if failure is evident.

c. Visually inspect the elastomer sections for evidence of excessive cuts, cracks or bond separation as follows:

(1) If metal-to-bond separation exceeds a total of 0.60 square inch area, replace complete mount.

(2) If flex cracks (surface failure of rubber due to flexing) exceeds 0.1 inch deep, replace complete mount.

d. Check for security of 5/16 inch bolts securing drag pin clevis to rubber cushion.

e. Torque bolts and nuts to 100 to 140 inch-pounds.

6-39. INSTALLATION – TRANSMISSION ISOLATION MOUNT.

Note

Two configurations of the isolation mount are currently in service. Early model mounts had two washers bonded on the inside of the clevis. Later model mounts have bosses machined on the inside of the clevis. On early configuration mounts ensure the two washers are in place prior to installation of the mount.

a. Install isolation mount on cabin roof with four bolts in existing nutplates. Torque bolts 50 to 70 inch-pounds.

b. Insert bolt (26, figure 6-3 or 34, figure 6-4) through pylon drag link and isolation mount. Install washers and nut and torque to 480 to 690 inch-pounds and secure with cotter pin.

6-40. ENGINE TO TRANSMISSION DRIVE SHAFT.

6-41. DESCRIPTION. A drive shaft with splined couplings is installed between the freewheeling coupling on the engine and the adapter flange on the transmission input drive adapter flange.

6-42. REMOVAL – ENGINE TO TRANSMISSION DRIVE SHAFT.

a. Remove cowling for access to drive shaft. (Refer to Section VIII.)

b. From right side of helicopter remove all screws necessary to remove drive shaft cover (7, figure 6-11).

c. Remove all screws securing drive shaft door (5) to aft side of forward firewall (3).

CAUTION

If engine to transmission drive shaft is being removed to facilitate maintenance on another component, lubrication of assembly is not required. Compress outer spherical couplings only enough to release from mating adapter flanges. If outer spherical couplings are compressed more than required to release from mating adapter flanges it is recommended that the engine to transmission drive shaft be disassembled, inspected, and relubricated.

d. Remove four nuts, washers, and bolts attaching forward drive shaft outer coupling to input pinion adapter on transmission (2).

e. Remove four nuts (12), washers (11), and bolts (10) attaching aft drive shaft outer coupling (13) to adapter flange of freewheeling unit (8).

f. Push aft on engine to transmission driveshaft (1) to compress spring in aft outer coupling (13) and obtain clearance between forward drive shaft coupling and input adapter flange. Move forward end of shaft outboard to clear input adapter flange. Move shaft assembly forward, passing aft outer coupling through opening and remove shaft assembly from helicopter.

g. If engine to transmission drive shaft assembly does not require disassembly cut strips of cardboard or wood of sufficient length to fit between the two outer couplings (10). Place material on shaft (16) and secure with masking tape (item 75, table 1-1). This will aid in preventing the collapse of outer couplings.

6-43. DISASSEMBLY – ENGINE TO TRANSMISSION DRIVE SHAFT.

a. Remove retainer ring (15) from inboard end of outer coupling (10).

b. Remove outer coupling (10) from seal (13) and spherical inner coupling (12).

c. Remove retainer ring (6, figure 6-12) from outer end of outer coupling (10).

d. Remove grease retainer plate (8) with O-ring (7) and shaft centering spring (9) from outboard end of outer coupling.

e. Remove bolts (11), washers (3), and nuts (17) attaching inner coupling (12) to flange on shaft (16). Hold nut with wrench to prevent nut turning with bolt and scoring shaft. Release of shaft from inner coupling will also release seal (13) which is assembled on end of shaft.

CAUTION

After outer couplings (10) and inner couplings (12) have been run on a helicopter, couplings should not be changed from their original position on the engine to transmission shaft (16). Do not intermix parts from one end of the shaft assembly to the other.

f. Repeat above instructions for disassembly of coupling assembly on other end of shaft.

g. Clean all parts with clean wiping cloths.

(1) Clean driveshaft parts, except seals, with solvent (item 12).

(2) Dry parts with filtered air.

(3) Clean seals with clean, dry cloth.

6-44. INSPECTION AND REPAIR – ENGINE TO TRANSMISSION DRIVE SHAFT.

a. Inspect coupling (10, figure 6-12) teeth and splines for wear, cracks or damage and for evidence of overheating. When wear or overheat is evident, inspect spline teeth in accordance with overhaul procedures. (Refer to Section VI., Part 4.)

Note

If zinc chromate primer has turned brown it indicates that the coupling may have been overheated.

b. Inspect seals (13, figure 6-12) for condition and replace as necessary. If boot portion of seal becomes detached from metal cone it is not cause for replacement. If desired, boot may be rebonded to metal cone after lightly sanding surfaces to be bonded with No. 180 grit abrasive

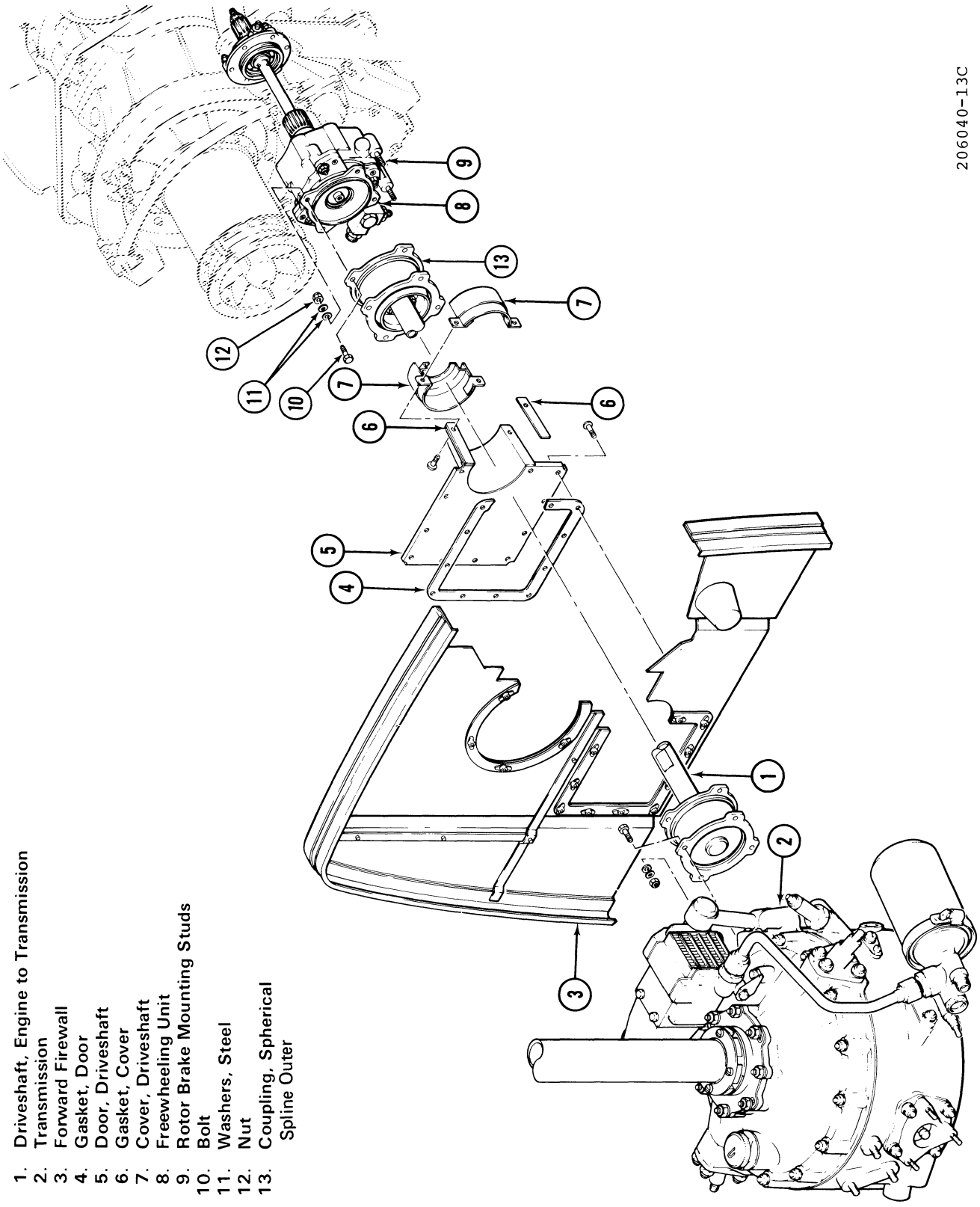

1. Driveshaft, Engine to Transmission
2. Transmission
3. Forward Firewall
4. Gasket, Door
5. Door, Driveshaft
6. Gasket, Cover
7. Cover, Driveshaft
8. Freewheeling Unit
9. Rotor Brake Mounting Studs
10. Bolt
11. Washers, Steel
12. Nut
13. Coupling, Spherical Spline Outer

Figure 6-11. Engine to Transmission Drive Shaft Removal

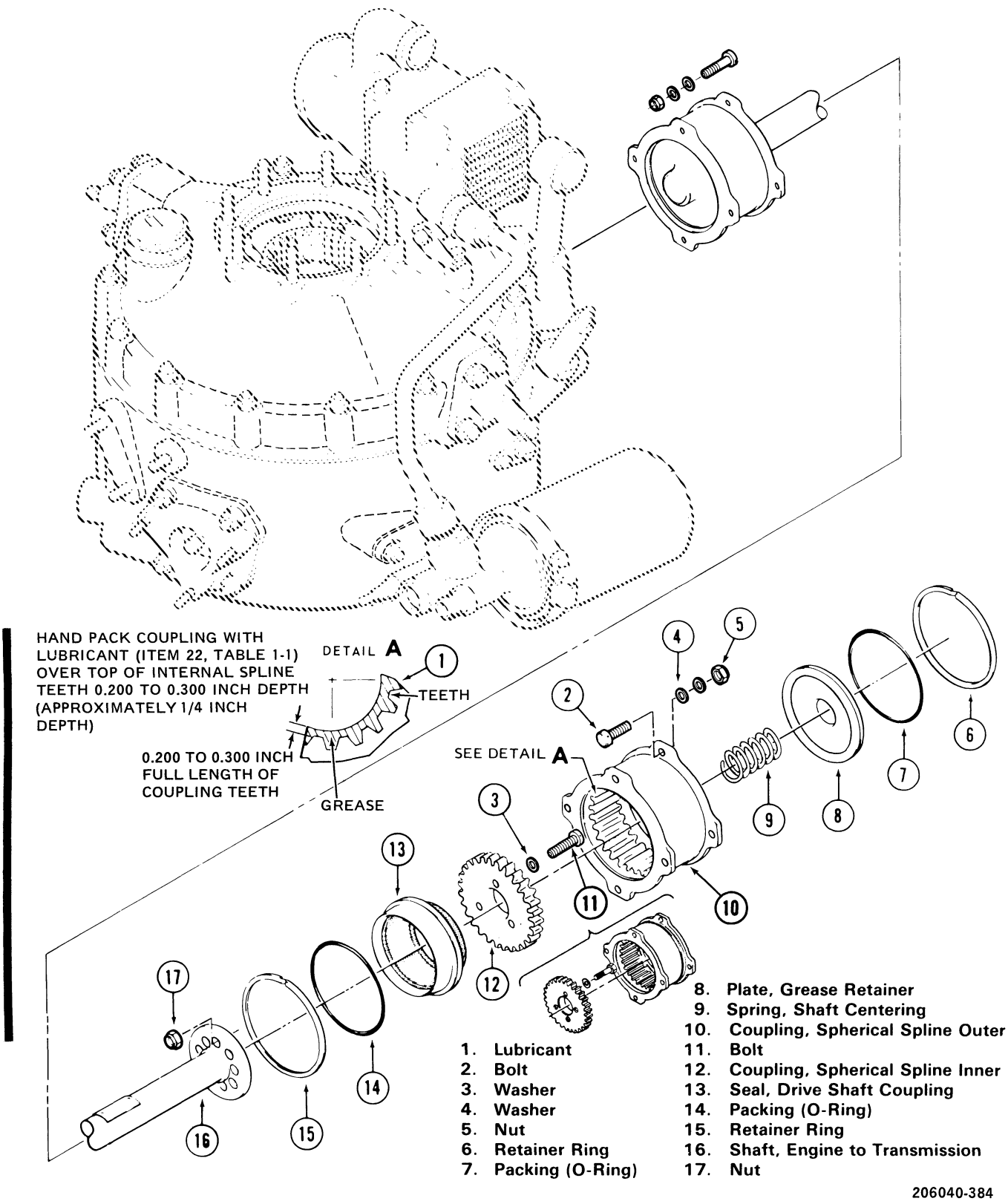

Figure 6-12. Engine to Transmission Drive Shaft Assembly — Exploded View

paper (item 15) and cleaning with MEK (item 17). Apply a bead of adhesive (item 105) to flange of cone and press cone in place on seal. Allow adhesive to air cure for 12 hours.

c. Discard packings (7 and 14) and nuts (5 and 17).

d. Inspect parts for nicks and scratches. Maximum limits are 0.002 inch deep around entire circumference or 0.005 inch deep, axial or circumferential but no longer than 25 percent of circumference. Dress out acceptable nicks and scratches with No. 320 or 400 grit abrasive cloth (item 13) or a fine india stone (item 95) as required. Apply protective coating to repaired areas.

e. Inspect shaft centering spring (9, figure 6-12) for free standing height of approximately 1.900 inches.

6-45. REASSEMBLY — ENGINE TO TRANSMISSION DRIVESHAFT.

a. Apply a light coating of lubricant (item 22) to packing (14, figure 6-12). Position packing in groove in outer edge of seal (13).

CAUTION

Do not intermix parts from one end of shaft assembly to the other.

b. Position retainer ring (15) over shaft (16). Position seal (13) on end of shaft (16). Apply sealant (item 7) to shaft groove and boot sealing bead.

CAUTION

The shaft (16) has both bolt holes and lightening holes. Ensure that the three small bolt holes in the shaft align with the holes in the inner coupling (12).

c. Install inner coupling (12) on end of shaft (16) with seal ring (13) projecting outboard and inner rolled edge of seal seated in groove in face of flange. Install bolts (11) with steel washer (3) under bolt heads and new nuts (17). Hold nuts (17) with a wrench to prevent turning and scoring shaft (16) while tightening bolts (11). Torque bolts (11) 50 to 70 inch-pounds.

d. Position inner coupling (12) with shaft (16) attached, in outer coupling (10). Fit seal (13) into recess in coupling (10) using care not to damage packing (14). Install retainer ring (15) into outer groove of coupling.

e. Apply lubricant (item 22) to the full length of internal teeth of outer coupling (10) while holding inner coupling (12) against seal (13). Lubricant should fill gaps between teeth and uniformly extend 0.200 to 0.300 inch over top of teeth (detail A, figure 66-12).

f. Apply a light coat of lubricant (item 22) to packing (7, figure 6-12). Install packing in groove of outer rim of grease retainer plate (8).

g. Position shaft centering spring (9) inside outer coupling (10) and against end of shaft (16). Place grease retainer plate (8) into outboard end of outer coupling (10) and compress shaft center spring (9). Secure with retainer ring (6) in groove on outboard end of outer coupling (10).

h. Repeat steps a. through g. on opposite end of shaft.

i. Wipe all lubricant and oil from outer surface of assembled shaft.

6-46. INSTALLATION — ENGINE TO TRANSMISSION DRIVESHAFT.

a. Place engine to transmission driveshaft (1, figure 6-11) through opening in forward firewall (3) and position driveshaft in place between input pinion flange on transmission (2) and flange on freewheeling unit (8).

b. Align attachment bolt holes of outer coupling (13) and flange of freewheeling unit (8). Install four bolts (10) with heads inboard through outer coupling (13) into flange on freewheeling unit (8). Install two steel washers (11) on shank of each bolt (10) with nuts (12). Hold heads of bolts (10) and torque nuts (12) to 50 to 70 inch-pounds.

c. Secure forward outer coupling in input pinion flange on transmission in the same manner. (Refer to step b.)

NOTE

If cover (7) is deformed it could contact driveshaft seal, inspect for clearance.

d. Install firewall drive shaft door (5) and drive shaft cover (7) on aft side of forward firewall (3) and secure with screws.

e. Reinstall cowling. (Refer to Section VIII.)

f. Following installation of a new main driveshaft, or one that has been disassembled for inspection, ground run the helicopter for 20 minutes. Inspect the driveshaft and the structure around both of the driveshaft couplings for evidence of grease leakage. If evidence of leakage is found, disassemble the driveshaft and inspect to determine the cause of the leakage.

6-47. FREEWHEELING ASSEMBLY.

6-48. DESCRIPTION. A shaft from the power turbine drives the engine power take-off gear shaft through the engine reduction gearbox. The freewheeling unit is mounted on the engine gearbox and its shaft is splined directly to the power take-off gear shaft. Engine power is transmitted to the outer race of the freewheeling unit, then through the full-phasing sprag elements of the unit which couples the engine power to the transmission drive shaft. The forward short shaft of the tail rotor drive system connects through a flexible coupling to a splined adapter on the aft end of the freewheeling shaft that passes through the engine reduction gearbox. During autorotation the main rotor drives the power input shaft. Under this condition, the freewheeling unit provides a disconnect from the engine so that the rotational forces of the main rotor are free to drive the transmission, tail rotor and all transmission mounted accessories. (See figures 6-13 and 6-13A)

6-49. REMOVAL – FREEWHEELING ASSEMBLY (206-040-230).

a. Remove forward short tail rotor drive shaft.

b. Remove engine to transmission drive shaft. (Refer to paragraph 6-42.)

c. Place container under forward end of freewheeling housing to receive drained oil. Remove drain plug (30 or 35, figure 6-13) and drain oil from freewheeling unit.

Note

A special drain hose may be used to assist in draining freewheeling unit assembly. (Refer to table 6-2 and Notes paragraph 6-19)

d. Disconnect input oil line at reducer (28, figure 6-13) on aft housing (29).

e. Remove cotter pin (26), nut (25), and washer (24) from aft end of inner race shaft assembly (1), using holding tool (T101555).

f. Remove three nuts (22) and washers (21 and 20) securing aft housing (29) to aft end of engine accessory gear case. Remove splined adapter (23) and aft housing (29) together.

Note

Do not remove shims (17) from face of engine accessory gear case unless a different freewheeling assembly is to be installed. Be careful to retain shims if same freewheeling assembly is to be reinstalled.

g. Remove nuts (9) and washers (8 and 7) securing cap assembly (3) to housing assembly (15).

h. Install three 1/4-inch, 28-thread-per-inch jack screws in cap assembly (3) to remove freewheeling assembly from housing assembly (15). The inner race shaft assembly (1) is an assembly of components comprising: outer race shaft assembly (11), clutch assembly (6), bearings (2, 5, and 10), and cap (3) with seal. Remove this assembly from housing assembly (15) and engine accessory case as a complete unit.

i. Remove housing assembly (15) and ring (13) only if it is necessary for accessory gearbox seal replacement, change of engine, or change of freewheeling assembly. (Refer to paragraph 6-50)

6-49A. REMOVAL – FREEWHEELING ASSEMBLY (206-040-270).

a. Remove forward short tail rotor drive shaft. (Refer to paragraph 6-57)

b. Remove engine to transmission drive shaft. (Refer to paragraph 6-42.)

c. Place suitable container under forward end of housing assembly (16, figure 6-13A). Remove detector (21) from self-closing valve (20) and install a DB-3225 drain hose, or remove self-closing valve and drain lubricating oil into container. (Refer to table 6-2 , and Notes paragraph 6-19.)

d. Disconnect hose assembly to reducer (32, figure 6-13A) on housing (33).

e. Remove cotter pin (30), nut (29), and washer (28) from aft end of inner race shaft assembly (1), using holding tool (T101555).

f. Remove nuts (26), washers (25 and 24), and housing (33) with adapter (27) from aft side of engine accessory gear case. Remove housing (33) and adapter (27) as a unit.

Note

Do not remove shims (18) from engine accessory gear case unless a different freewheeling assembly is to be installed. Be careful to retain shims if the same freewheeling assembly is to be reinstalled.

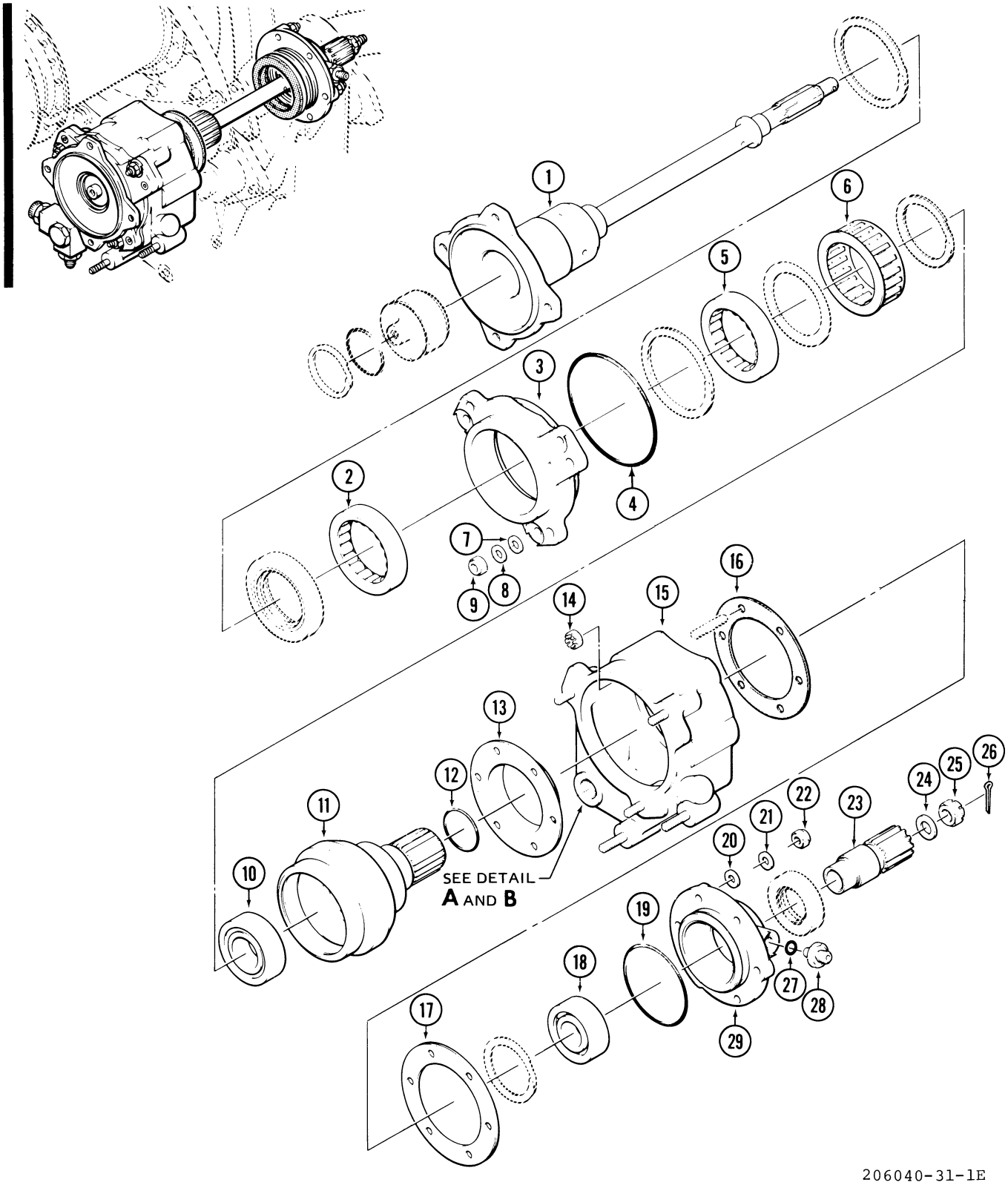

Figure 6-13. Freewheeling Assembly (206-040-230) (Sheet 1 of 2)

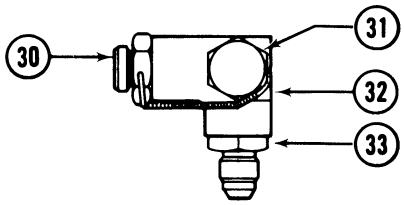

206-040-230-13 AND -19 FREEWHEELING ASSEMBLY

DETAIL **A**

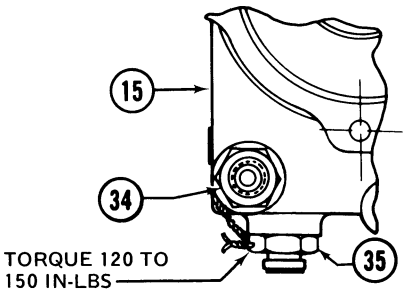

206-040-230-25 FREEWHEELING ASSEMBLY

DETAIL **B**

1. Shaft Assembly — Inner Race
2. Bearing
3. Cap Assembly
4. Packing
5. Bearing
6. Clutch Assembly
7. Aluminum Washer
8. Steel Washer
9. Nut
10. Bearing
11. Shaft Assembly — Outer Race
12. Packing
13. Ring
14. Nut
15. Housing Assembly
16. Gasket
17. Shim
18. Bearing
19. Packing
20. Aluminum Washer
21. Steel Washer
22. Nut
23. Adapter
24. Steel Washer
25. Nut
26. Cotter Pin
27. Packing
28. Reducer
29. Housing
30. Drain Plug
31. Bolt
32. Fitting
33. Union
34. Union
35. Drain Plug

206040-31-2F

Figure 6-13. Freewheeling Assembly (206-040-230) (Sheet 2 of 2)

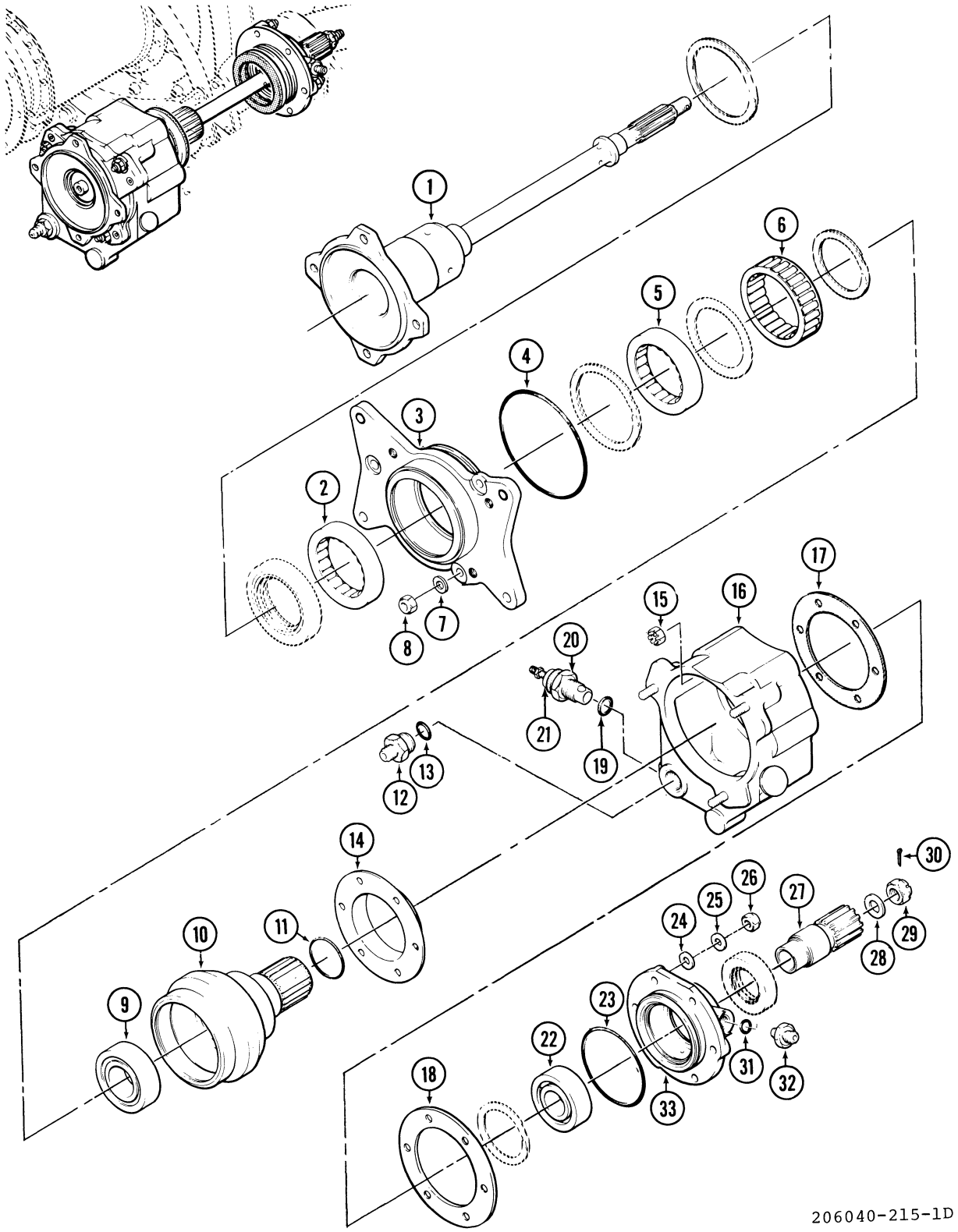

Figure 6-13A. Freewheeling Assembly (206-040-270) (Sheet 1 of 2)

1. Shaft Assembly — Inner Race
2. Bearing
3. Cap Assembly
4. Packing
5. Bearing
6. Clutch Assembly
7. Washer — Steel
8. Nut
9. Bearing
10. Shaft Assembly — Outer Race
11. Packing
12. Union
13. Packing
14. Ring
15. Nut
16. Housing Assembly
17. Gasket
18. Shim
19. Packing
20. Valve, Self Closing
21. Detector
22. Bearing
23. Packing
24. Washer — Aluminum
25. Washer — Steel
26. Nut
27. Adapter
28. Washer — Steel
29. Nut
30. Cotter Pin
31. Packing
32. Reducer
33. Housing

206040-215-2

Figure 6-13A. Freewheeling Assembly (206-040-270) (Sheet 2 of 2)

g. Remove nuts (8), and washers (7) from cap assembly (3) and housing assembly (16). Install three 1/4-inch, 28-threads-per-inch jack screws in threaded holes in cap assembly (3) and remove from housing assembly (16). The inner race shaft assembly (1) is an assembly of components comprising: outer race shaft assembly (10), clutch (6), bearings (2, 5, and 9), and cap assembly (3) with seals. Remove this assembly from housing assembly (16) and engine accessory case as a complete unit.

h. Remove housing assembly (16) and ring (14) only if it is necessary for engine accessory gearbox seal replacement, change of engine, or change of freewheeling assembly. (Refer to paragraph 6-50A)

6-50. REMOVAL – FREEWHEELING HOUSING (206-040-230).

Note

Removal of freewheeling housing assembly (15, figure 6-13) is not recommended unless it is necessary for engine gearbox seal replacement, change of engine, or change of freewheeling assembly.

a. Remove freewheeling assembly. (Refer to paragraph 6-49.)

b. Remove oil line from union (33 or 34, figure 6-13, details A and B) on forward end of freewheeling housing assembly (15).

c. Remove nuts (14) located inside housing assembly (15) and remove ring (13), housing assembly, and gasket (16). Discard gasket and nuts.

6-50A. REMOVAL – FREEWHEELING HOUSING (206-040-270).

Note

Removal of freewheeling housing (16, figure 6-13A) is not recommended unless it is necessary for engine gearbox seal replacement, change of engine, or change of freewheeling assembly.

a. Remove freewheeling assembly. (Refer to paragraph 6-49A.)

b. Disconnect hose assembly from union (12, figure 6-13A) on front of housing assembly (16).

c. Remove nuts (15) located inside housing assembly (16) and remove ring (14), housing assembly (15), and gasket (17). Discard gasket and nuts.

6-50B. CLEANING – FREEWHEELING ASSEMBLY.

a. Clean all parts with solvent (item 12, **table 1-1**). Dry with filtered compressed air. Do not allow bearings to spin while drying.

b. Inspect parts immediately after cleaning. Exercise care to avoid corrosion and fingerprints on bearings and machined surfaces. If parts cannot be inspected immediately lubricate all parts with turbine oil (item 20, **table 1-1**).

c. Remove old sealant from threads on aft end of inner race shaft assembly, adapter, washer, and nut with a plastic scraper and methyl-ethyl-ketone (item 17, **table 1-1**). On steel parts light brushing with a wire brush may be used to remove sealant.

6-51. INSPECTION AND REPAIR – FREEWHEELING ASSEMBLY (206-040-230 and 206-040-270).

a. Inspect drain plugs (30 or 35, figure 6-13, detail A and B) or detector (21, figure 6-13A) for metal particles immediately after removal. If any particles are found make a further investigation in accordance with paragraph 6-21.

b. Inspect (B-758R) drain plugs (30 or 35, figure 6-13 detail A and B) for loss of magnetic strength. This condition is rare, but can occur by dropping drain plugs on the floor or exposure of plugs to high electrical fields. The magnetic detectors can be tested to assure they have sufficient magnetic strength by lifting a 0.750 inch diameter steel ball. (An AN6-14A bolt is of equivalent weight.) Inspect self-closing portion of drain valve for proper operation and leakage.

c. Inspect (B-3225C) self-closing drain valve and detector (20 and 21, figure 6-13A) for condition and serviceability. These detectors have ceramic magnets not subject to loss of magnetic strength.

d. Inspect all parts for nicks and scratches. Dress out minor nicks and scratches with No. 320 or 400 grit abrasive paper (item 15, **table 1-1**). Apply protective coating where required.

e. Visually inspect splines for wear, cracks, and damage. When wear is indicated refer to **Section VI**, Overhaul, Part 3 or 3A.

f. Inspect union and reducer fittings, seals, gasket, and packings for leakage.

g. Replace gasket and all packings. Replace leaking seals in accordance with **Section VI,** Overhaul, Part 3 or 3A.

h. Check for free rotation of the shaft assemblies and engagement of clutch assembly as follows:

(1) Hold outer race shaft assembly and inner race shaft assembly with flange end toward you.

(2) Rotate flange of inner race shaft assembly by hand. Freewheeling clutch assembly should drive when turned clockwise and freewheel when turned counterclockwise.

i. Roll bearing in aft housing and check for freedom of movement without flat or rough spots.

j. Visually inspect all studs for security and condition of threads.

k. For detailed inspection and repair procedures, refer to **Section VI**, Overhaul, Part 3 or 3A.

6-52. INSTALLATION – FREEWHEELING ASSEMBLY (206-040-230).

Note

If engine assembly is removed install freewheeling assembly before installing engine assembly in helicopter, for ease of maintenance.

a. Install housing assembly (15, figure 6-13) as follows:

(1) Insert gasket (16) on studs on forward side of engine accessory gear case.

CAUTION

The (MS21043-4) nuts (14) may not be reused if friction drag torque of nuts is less than 8 inch-pounds.

(2) Install ring (13) in housing assembly (15) and align to studs on forward side of engine accessory gear case. Guide ring and housing assembly onto studs and secure with nuts (14). Torque nuts (14) to 50 to 70 inch-pounds plus friction drag of nuts.

b. Stand assembled inner and outer race shaft assemblies (1 and 11) on adapter flange and squirt turbine oil (item 20, **table 1-1**) (same type as used in transmission) between inner and outer shafts to lubricate clutch assembly (16, figure 6-13) and bearings (5 and 10).

c. Check for freedom of movement to ensure that cap assembly (3) and bearing (2), and clutch assembly (6) and bearings (5 and 10) are not binding.

d. Apply light coating of turbine oil (item 20, table 1-1) to packings (4 and 12, figure 6-13) on shaft assemblies.

e. Position inner and outer race shaft assemblies (1 and 11) in housing assembly (15) until splined end of inner race shaft assembly protrudes through aft side of engine accessory gear case. Rotate adapter flange on forward end of inner race shaft assembly (1) back and forth to align gear teeth between outer race shaft assembly (11) and drive gear in engine accessory gear case.

f. Push cap assembly (3) firmly in place into housing assembly (15). Install aluminum washers (7), steel washers (8), and new nuts (9). Torque nuts (9) to 50 to 70 inch-pounds plus friction drag of nuts.

g. Apply a film of turbine oil (item 20, table 1-1) to new packings (19 and 27, figure 6-13) and to surfaces of bearing (18) in housing (29). Insert new packing (27) on reducer (28) and install in housing (29). Insert new packing (19) in groove on inboard flange of housing (29).

CAUTION

If the same freewheeling assembly is being re-installed on the same engine assembly without any alteration or replacement of parts, the installation may be made with the original thickness of shims (17) without making a dimensional check. Installation of a new engine, new freewheeling assembly, or repair of original freewheeling assembly will require a dimensional check. Shipping gasket must be removed from new engine.

h. Dimensional check. Perform as follows:

(1) Apply a film of lubricant (item 26, **table 1-1**) to shank of adapter (23, figure 6-13), lip of seal in housing (29) and to packing (19). Install adapter into housing using a thimble, if available; exercising extreme care not to damage seal.

(2) Install adapter (23) and housing (29) as a unit on exposed aft end of the inner race shaft assembly (1).

(3) Install washer (24) and nut (25) on aft end of inner race shaft assembly (1). Attach (T101555) face coupling wrench to adapter flange on forward end of inner race shaft assembly (1) and tighten nut (25) only enough to firmly seat bearing (18) and adapter (23).

(4) **Push inner race shaft assembly (1, figure 6-14) aft in housing assembly (2) by applying hand pressure to adapter flange on forward end. Using two feeler gages, measure at diametrically opposite positions the gap between aft face of engine accessory gear case and forward face of aft housing assembly (3).**

(5) **Peel shim (4) to provide a shim 0.015 to 0.020 inch less than measured clearance between faces to provide proper clearance between shoulder of outer race shaft assembly (5) and power output gear shaft.**

(6) Remove nut (25, figure 6-13), washer (24), adapter (23) and housing (29) as a unit from aft end of inner race shaft assembly (1) and aft side of engine accessory gear case. Do not separate adapter (23) from housing (29).

Note

After completing dimensional check on a new installation or replacing a removed installation accomplish all the following steps.

i. Clean mating surfaces of shim (17), housing (29), and aft face of engine accessory gear case and studs with naphtha (item 36, **table 1-1**). Wipe dry and apply a coating of unreduced zinc chromate primer (item 80, **table 1-1**) to mating surfaces and studs. Reinstall parts immediately in accordance with the following procedures.

j. Position shim (17, figure 6-13) to housing (29) and adapter (23). Do not position shim on engine accessory case studs first for possible damage to packing (19) may occur when installing housing (29). Install assembled parts as a unit on aft face of engine accessory gear case and onto inner race shaft assembly (1). Reducer (28) on housing (29) must be located at the 10 o'clock position as viewed from aft side.

k. Secure housing (29) with washers (20 and 21) and nuts (22). Ensure aluminum washers (20) are installed next to housing (29) and that steel washers (21) are under nuts (22). Torque nuts (22) to 50 to 70 inch-pounds plus friction drag of nuts.

l. Clean surfaces of washer (24) and threads of nut (25) with naphtha (item 36, **table 1-1**). Apply a ring of sealant (item 7, table 1-1) to surfaces of washer (24, figure 6-13) and threads of nut (25) and install on aft end of inner race shaft assembly (1). Attach (T101555) face coupling wrench to adapter flange on forward end of inner race shaft assembly (1) and torque nut (25) to 225 to 500 inch-pounds. Remove face coupling wrench.

m. Secure nut (25) with cotter pin (26) with eye and tangs below outside surface of nut. (See figure 6-14.)

n. On (206-040-230-13 and -19) freewheeling assemblies lubricate new packings for drain plug (30, figure 6-13, detail A), bolt (31), and union (33) with lubricant (item 26, table 1-1). Install a new packing under head of bolt (31, figure 6-13, detail A) and insert in fitting (32). Position additional packing on shank of bolt (31) on inboard side of fitting (32). Align fitting (32) to lower forward corner of housing assembly (15) and torque bolt (31) to standard torque. Insert new packings on drain plug (30) and union (33) and torque to fitting (32). Safety bolt (31) and drain plug (30) together with 0.032 inch lockwire (item 19, table 1-1). (See figure 6-13, detail A.)

o. On (206-040-230-25) freewheeling assemblies lubricate new packings for union (34, figure 6-13, detail B) and drain plug (35) lubricant (item 26, table 1-1). Install new packings on union (34, figure 6-13, detail B) and drain plug (35) and install in lower forward corner of housing assembly (15).

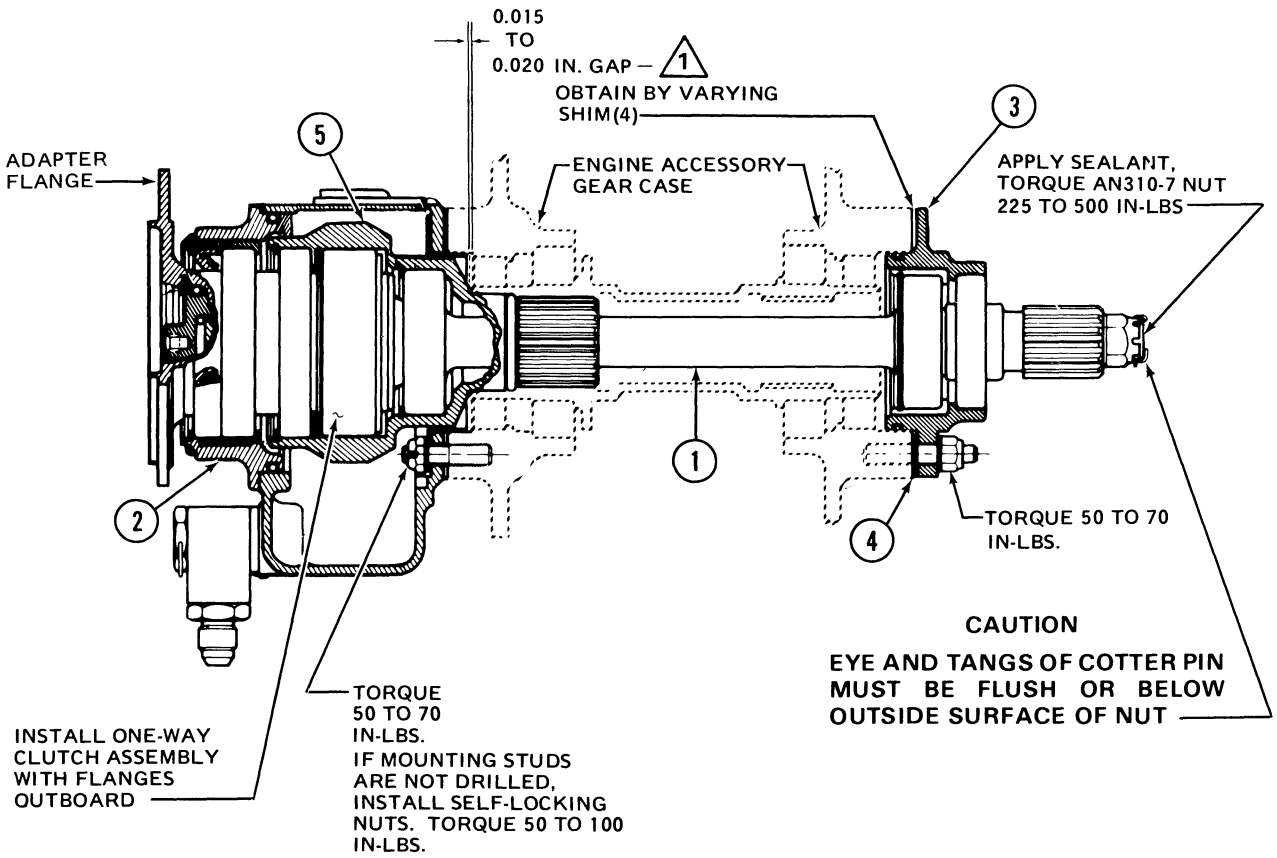

1. Inner race shaft assembly
2. Forward housing assembly
3. Aft housing assembly
4. Shim
5. Outer race shaft assembly

NOTE:

1 The 0.015 to 0.020 inch gap between the outer race shaft and power output gear shaft is obtained by adjusting shim (4) thickness between the aft housing and aft face of engine accessory gearbox.

206040-238B

Figure 6-14. Freewheeling Assembly — Clearances and Torques

Torque union (34) to standard torque and drain plug (35) to 120 to 150 inch-pounds. Secure drain plug (35) to housing with 0.032 inch lockwire (item 19). (See figure 6-13 , detail B.)

p. Connect oil hose assemblies to reducer (28) and union (33 or 34) , as applicable.

q. Install forward short tail rotor drive shaft. (Refer to paragraph 6-64.)

r. Install engine to transmission drive shaft. (Refer to paragraph 6-46.)

s. Perform freewheeling operational check. (Refer to paragraph 6-53A .)

6-53. INSTALLATION — FREEWHEELING ASSEMBLY (206-040-270).

Note

If engine assembly is removed install freewheeling assembly before installing engine assembly in helicopter, for ease of maintenance.

a. Install housing assembly (16, figure 6-13A) as follows:

(1) Insert gasket (17) on studs on forward side of engine accessory gear case.

CAUTION

The (MS21043-4) nuts (15) may not be reused if friction drag torque of nuts is less than 8 inch-pounds.

(2) Install ring (14) in housing assembly (16) and align to studs on forward side of engine accessory gear case. Guide ring and housing assembly onto studs and secure with nuts (15). Torque nuts (15) to 50 to 70 inch-pounds. plus friction drag of nuts.

b. Stand assembled inner and outer race shaft assemblies (1 and 10) on adapter flange and squirt turbine oil (item 20) (same type as used in transmission) between inner and outer shaft assemblies to lubricate clutch assembly (6, figure 6-13A) and bearings (5 and 9).

c. Check for freedom of movement to ensure that cap assembly (3) and bearing (2), and clutch assembly (6) and bearings (5 and 9) are not binding.

d. Apply a light coating of turbine oil (item 20) to packings (4 and 11, figure 6-13A) on shaft assemblies.

e. Position inner and outer race shaft assemblies (1 and 10) in housing assembly (16) until splined end of inner race shaft assembly protrudes through aft side of engine accessory gear case. Rotate adapter flange on forward end of inner race shaft assembly (1) back and forth to align gear teeth between outer race shaft (10) and drive gear in engine accessory gear case.

f. Push cap assembly (3) firmly into housing assembly (16). Install steel washers (7) and new nuts (8). Torque nuts (8) to 50 to 70 inch-pounds plus friction drag of nuts.

g. Apply a film of turbine oil (item 20) to new packings (23 and 31, figure 6-13A) and to surfaces of bearing (22) in housing (33). Insert new packing (31) on reducer (32) and install in housing (33). Insert new packing (23) in groove on inboard flange of housing (33).

CAUTION

If the same freewheeling assembly is being reinstalled on the same engine assembly without any alteration or replacement of parts, the installation may be made with the original shims (18) without making a dimensional check. Installation of a new engine, new freewheeling assembly, or repair of original freewheeling assembly will require a dimensional check. Shipping gasket must be removed from new engine.

h. Dimensional check. Perform as follows:

(1) Apply a film of lubricant (item 26) to shank of adapter (27, figure 6-13A), lip of seal in housing (33), and to a new packing (23). Install adapter (27) into housing (33) using a thimble, if available; exercising extreme care not to damage seal.

(2) Install adapter (27) and housing (33) as a unit on exposed aft end of the inner race shaft assembly (1).

(3) Install washer (28) and nut (29) on aft end of inner race shaft assembly (1). Attach (T101555) face coupling wrench to adapter flange on forward end of inner race shaft assembly (1) and tighten nut (29) only enough to firmly seat bearing (22) and adapter (27).

(4) Push inner race shaft assembly (1) aft in housing assembly (16) by applying hand pressure to adapter flange on forward end. Using two feeler gages, measure at diametrically opposite positions the gap between aft face of engine accessory gear case and forward face of housing (33).

(See figure 6-14) If there is no gap, the outer race shaft is not seated on the inner race shaft.

(5) Peel shim (18, figure 6-13A) to provide a shim 0.015 to 0.020 inch less than measured clearance between faces to provide proper clearance between shoulder of outer race shaft assembly (10) and forward face of engine accessory gear case. (See figure 6-14.)

(6) Remove nut (29, figure 6-13A), washer (28), adapter (27) and housing (33) as a unit from aft end of inner race shaft assembly (1) and aft side of engine accessory gear case. Do not separate adapter (27) from housing (33).

Note

After completing dimensional check on a new installation or replacing a removed installation accomplish all the following steps.

i. Clean mating surfaces of shim (18), housing (33), and aft face of engine accessory gear case and studs with naphtha (item 36). Wipe dry and apply a coating of polyamide epoxy primer (item 56) to mating surfaces and studs. Reinstall parts immediately in accordance with the following procedures:

(1) Position shim (18, figure 6-13A) to housing (33) and adapter (27). Do not position shim on engine accessory gear case studs first for possible damage to packing (23) may occur when installing housing (33). Install assembled parts as a unit on aft face of engine accessory gear case and onto inner race shaft assembly (1). Flat surface on housing (33) should be at the top with reducer (32) at the 10 o'clock position.

(2) Secure housing (33) with washers (24 and 25) and nuts (26). Ensure aluminum washers (24) are installed next to housing (33) and that steel washers (25) are under nuts (26). Torque nuts (26) 50 to 70 inch-pounds.

(3) Clean surfaces of washer (28) and threads of nut (25) with naphtha (item 36). Apply a ring of sealant (item 7) to surfaces of washer (28, figure 6-13A) and threads of nut (29) and install on inner race shaft assembly (1). Attach (T101555) face coupling wrench to adapter flange on forward end of inner race shaft assembly (1) and torque nut (29) 225 to 500 inch-pounds. Remove face coupling wrench.

(4) Apply a film of lubricant (item 26) to new packings (13 and 19, figure 6-13A). Insert packing (13) on union (12) and install in lower front corner of housing assembly (16). Insert packing (19) on self-closing valve (20) and install in bottom of housing assembly (16). Torque self-closing valve (20) 75 to 125 inch-pounds and union (12) to standard torque. Secure self-closing valve (20) with 0.032 inch lockwire (item 19) to housing. Install and secure detector (21, figure 6-13A) in self-closing valve (20).

(5) Connect oil hose assemblies to union (12, figure 6-13A) and reducer (32).

(6) Install forward short tail rotor driveshaft. (Refer to paragraph 6-64.)

(7) Install engine to transmission driveshaft. (Refer to paragraph 6-46.)

(8) Perform freewheeling operation check. (Refer to paragraph 6-53A.)

6-53A. FREEWHEELING OPERATIONAL CHECK.

a. Perform ground run-in cycle for 20 minutes.

b. After shutdown accomplish the following requirements:

(1) Remove and inspect electric chip detector for metal particles. If metal particles are found, investigate to determine cause. Install electric chip detectors.

(2) Inspect freewheeling assembly for oil leaks.

6-54. TAIL ROTOR DRIVESHAFT.

6-55. DESCRIPTION. (Helicopters 4 through 1251.)

The tail rotor drive shaft is made up of the following four sections: the forward short shaft (5, figure 6-1), the oil cooler fan shaft (6), the aft short shaft (8) and the long shaft (11). Steel laminated flexible couplings, requiring no lubrication, are used to connect the shaft sections and the tail rotor gearbox. The forward shaft and the oil cooling fan shaft are steel. The aft short shaft and the long shaft are aluminum. Sealed bearings used on the tail rotor drive shafts do not require lubrication. On helicopter modified per SB 206-76-12 the 206-040-339-9 bearing can be lubricated.

Note

The long tail rotor drive shaft is designed to have a bend in the shaft between the first and second, and second and third bearing supports.

6-56. DESCRIPTION. (Helicopters 1252 and Subsequent.)

The tail rotor drive shaft is made up of the following sections: the forward short shaft (6, figure 6-2), the oil cooler fan shaft (7), the aft short shaft (9), and the tail rotor drive shaft segments (11). Steel laminated flexible couplings requiring no lubrication are used to connect the shaft sections and the tail rotor gearbox. The forward short shaft and the oil cooling fan are steel. The aft short shaft and the tail rotor drive shaft segments are aluminum. Sealed bearings used on the tail rotor drive shafts do not require lubrication. On helicopters modified per SB 206-76-12 , the 204-040-239-9 bearing can be lubricated.

6-57. REMOVAL FORWARD AND AFT SHORT TAIL ROTOR DRIVESHAFTS.

CAUTION

After a disc assembly has been run on a helicopter, discs should not be changed from original pack except as noted in paragraph 6-63.1.

a. Remove two diametrically opposed bolts (11, figure 6-15) from splined couplings at each end of aft short shaft (6). Leave laminated disc assemblies (17) assembled on aft shaft. Remove aft short shaft (6) from helicopter.

b. Remove two diametrically opposed bolts (11) from splined couplings at each end of forward short shaft (3). Leave laminated disc assemblies (17) assembled on forward short shaft. Remove forward short shaft (3) from helicopter.

c. Remove retainer spring (10, no longer used) if installed, and splined adapter (8) from aft end of oil cooler shaft (4). Remove splined adapter (16) from forward end of tail rotor drive shaft or shaft segment (7) in same manner.

d. Remove retainer spring (10) if installed, and splined adapter (9) from forward end of oil cooler shaft (4). Remove splined adapter (2) from aft end of freewheeling drive shaft (1).

6-58. Deleted

6-59. REMOVAL — LONG TAIL ROTOR DRIVESHAFT INCORPORATING CLAMP TYPE BEARING HANGERS WITH SHIMS.

CAUTION

After a disc assembly has been run on a helicopter, discs should not be changed from original pack except as noted in paragraph 6-63.1.

a. Remove two diametrically opposed bolts (3, figure 6-17) from couplings at each end of shaft. Leave laminated disc assemblies (5) on shaft adapter (2) and input pinion adapter (31).

b. Remove cotter pins and nut (19), washers (20) from two hanger bracket screws (22) attaching each of the five bearing hangers (14) to bearing supports (21) mounted along top center of tailboom. Remove long tail rotor drive shaft (10) and bearing hangers from tailboom.

c. Remove cotter pin and washer from safety pin (9) on long tail rotor drive shaft (10), and remove splined adapter (6).

d. Clean all abrasive-type matter from long tail rotor drive shaft to prevent scratching shaft during removal of bearing collars (12). Place a (NAS617-10) packing in radius groove between splined fitting (23) and forward end of long tail rotor drive shaft (10). This is to prevent damage to rubber bearing collars (12) during removal.

e. Apply a coating of HR lubricant or KY jelly (item 65, table 1-1) to shaft. If lubricant or jelly becomes dry, add a small amount of water.

CAUTION

Do not remove bearing hangers (14) from bearings (11) while still on shaft.

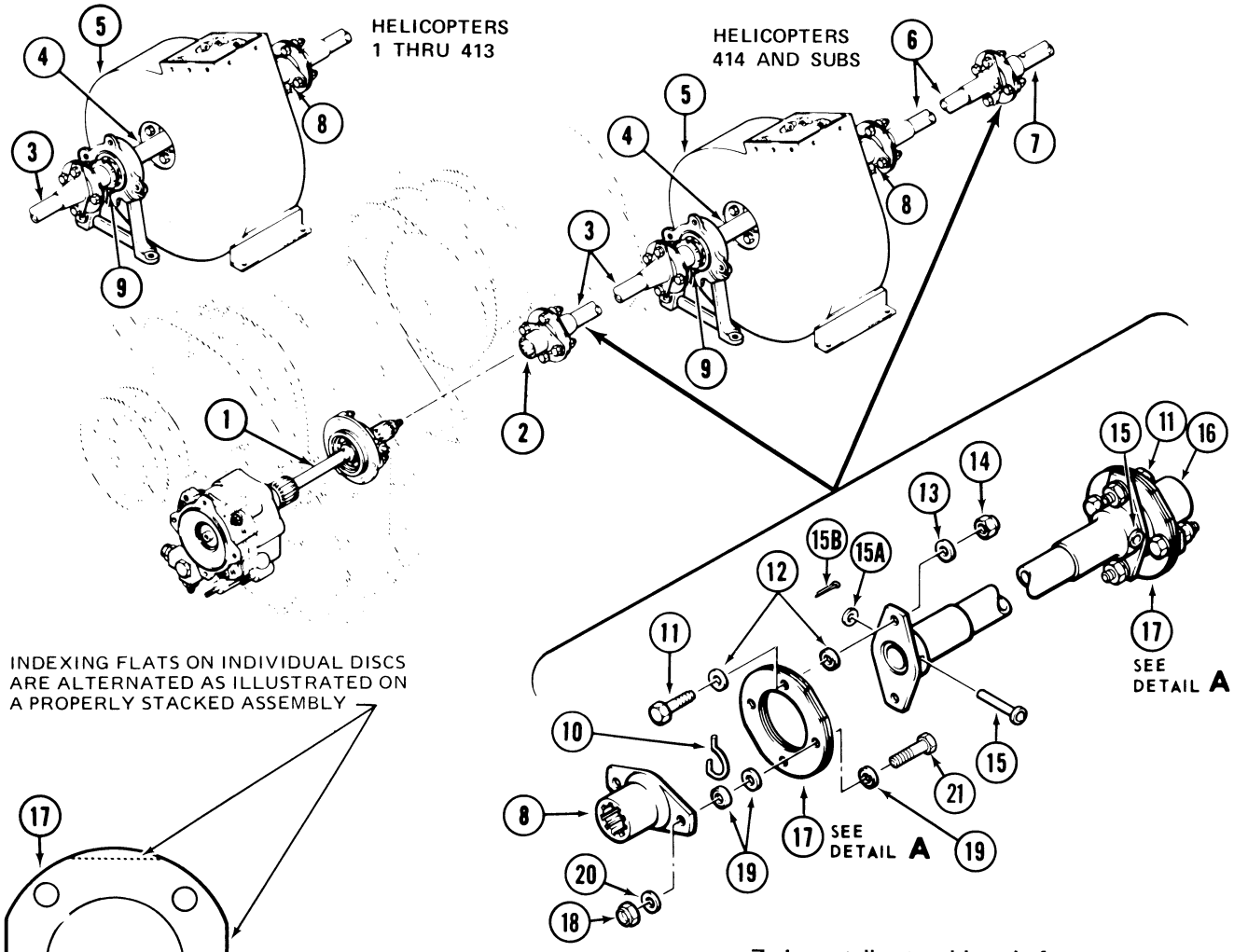

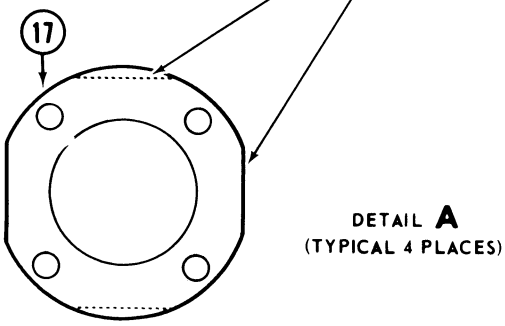

NOTE

On helicopters 1252 and subsequent the long tail rotor driveshaft (7) has been replaced by tail rotor driveshaft segments (see figure 6-19).

1. Freewheeling shaft
2. Splined adapter
3. Forward short shaft
4. Fan shaft
5. Blower assembly
6. Aft short shaft
7. Long tail rotor drive shaft (helicopters 1 thru 1251) forward tail rotor drive shaft segment (helicopters 1252 and Subs)
8. Splined adapter
9. Splined adapter
10. Retainer spring (No longer used)
11. Bolt
12. Beveled washers
13. Thin steel washers
14. Nut
15. Pin
15A. Aluminum washer
15B. Cotter pin
16. Splined adapter
17. Disk assembly
18. Nut
19. Bevel washers
20. Thin steel washer
21. Bolt

206040-32M
206040-301

Figure 6-15. Forward and Aft Short Tail Rotor Driveshafts

All data on page 6-34, including figure 6-16, deleted.

f. Remove the five bearing hangers (14, figure 6-17), with bearings (11), and collars (12) from the long tail rotor drive shaft (10).

g. Remove bolts (17), washers (15 and 16) and shims (18) from bearing hangers (14).

h. Rotate bearings (11) 90 degrees to notches in bearing hangers (14) and remove bearings.

i. For inspection and repair refer to paragraph 6-63 For overhaul refer to Section VI, Part 4.

6-60. REMOVAL — LONG TAIL ROTOR DRIVE SHAFT INCORPORATING CLAMP TYPE BEARING HANGERS WITH SPRINGS.

CAUTION

After a disc assembly has been run on a helicopter, discs should not be changed from original pack except as noted in paragraph 6-63, step 1.

Only the grip portion (unthreaded) of bolts are permitted to contact disc assemblies and bolt lengths must be equal at 180 degree positions.

a. Remove two diametrically opposed bolts (3, figure 6-18 from coupling at each end of shaft. Leave laminated disc assembled on shaft adapter (2) and on input pinion adapter (32).

b. Remove two hanger screws (23), cotter pin and nuts (19) and aluminum washers (20) attaching each of the five bearing hangers (14) to hanger brackets (22) mounted along top center of tailboom. Remove long tail rotor shaft (11) and bearing hangers (14) from tailboom.

c. Remove cotter pin (10B) and aluminum washer (10A) from pin (10) on long tail rotor drive shaft (11), and remove splined adapter (6).

d. Clean all abrasive-type matter from shaft to prevent scratching shaft during removal of bearing collars (13). Place a NAS617-10 packing in radius groove between splined fitting (9) and forward end of long tail rotor drive shaft (11). This is to prevent damage to rubber bearing collars (13) during removal.

e. Apply a coating of HR lubricant (item 65, table 1-1) or talcum powder to shaft. If the lubricant becomes dry add a small amount of water.

CAUTION

Do not remove bearing hanger (14) from bearing (12) while still on shaft.

f. Remove the five bearing hangers (14), with bearings (12), and bearing collars (13) from the long tail rotor drive shaft (11).

g. Remove nuts (15), spacers (16) and springs (17) from bearing hangers (14).

h. Rotate bearings (12) 90 degrees to notches in bearing hangers (14) and remove bearings. Remove and discard bearing collar.

i. For inspection and repair refer to paragraph 6-63 For overhaul refer to Section VI, Part 4.

6-61. REMOVAL — SEGMENTED TAIL ROTOR DRIVE SHAFT.

CAUTION

After the disc assembly has been run on a helicopter, discs should not be changed from original pack except as noted in paragraph 6-63, step 1.

a. Remove two diametrically opposed bolts (10, figure 6-19), thin steel washers (9), beveled washers (6), and nuts (5) from each of the five coupling assemblies for the forward tail rotor drive shaft segment (2) and the four aft tail rotor drive shaft segments (3). (Refer to detail A.) Leave the laminated disc assemblies (7) bolted to flange adapters (16) on the end of each shaft segment, and the short shaft (1).

b. Remove two diametrically opposed bolts (39), beveled washers (38), thin steel washers (36), and nuts (35) from input pinion adapter (34) at tail rotor gear box (4). (Refer to detail C.)

c. Remove tail rotor driveshaft segments as follows:

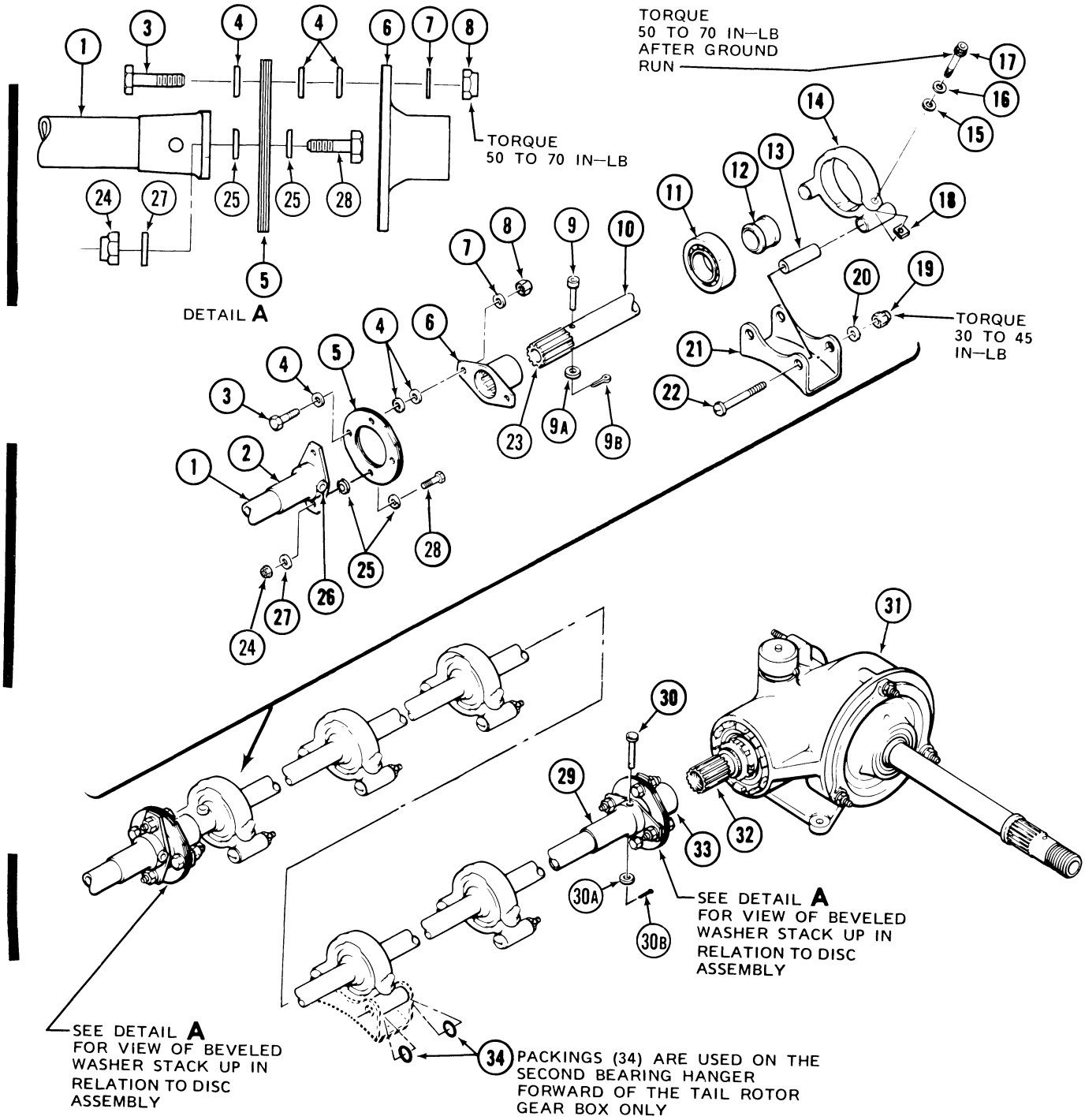

206040-137-1D
206040-301

Figure 6-17. Long Tail Rotor Driveshaft Incorporating Clamp Type Bearing Hangers With Shims (Sheet 1 of 2)

1. Aft short shaft
2. Shaft adapter (bonded)
3. Bolt
4. Beveled washer
5. Disc assembly
6. Splined adapter
7. Thin steel washer
8. Nut
9. Pin
9A. Aluminum washer
9B. Cotter pin
10. Long tail rotor driveshaft
11. Bearing
12. Collar
13. Bushing
14. Bearing hanger
15. Aluminum washer
16. Steel washer
17. Bolt
18. Shim
19. Nut and cotter pin
20. Aluminum washer
21. Hanger bracket
22. Screw
23. Splined fitting (bonded)
24. Nut
25. Beveled washers
26. Pin, washer and cotter pin
27. Thin steel washer
28. Bolt
29. Shaft adapter (bonded)
30. Pin
30A. Aluminum washer
30B. Cotter pin
31. Tail rotor gearbox
32. Input pinion shaft
33. Input pinion adapter
34. Packings

206040-137-2D

Figure 6-17. Long Tail Rotor Driveshaft Incorporating Clamp Type Bearing Hangers With Shims (Sheet 2 of 2)

(1) Remove cotter pins (28), nuts (29), and thin aluminum washers (30) from all screws (33).

(2) Remove screws (33) and lift tail rotor driveshaft segment (3), packings (22), aluminum washers (22A), and bushings (31) from tail boom at fuselage station 282.73.

(3) Remove screws (33) and lift tail rotor driveshaft segment (3), aluminum washers (22A), and bushings (31) from tailboom at fuselage stations 205.93, 228.79. 255.77, and 309.67.

d. Remove the forward tail rotor driveshaft segment (2) from tail boom.

NOTE

The forward tail rotor driveshaft segment (2) is not interchangeable with the four aft tail rotor driveshaft segments (3).

e. For disassembly of forward and aft tail rotor driveshaft segments (2 and 3), refer to paragraph 6-62.

6-62. DISASSEMBLY — TAIL ROTOR DRIVESHAFT SEGMENTS.

CAUTION

The forward tail rotor driveshaft segment (2, figure 6-19) is the longest of the driveshaft segments, and cannot be interchanged with the four aft tail rotor driveshaft segments (3).

After the disc assembly has been run on a helicopter, discs should not be changed from original pack except as noted in paragraph 6-63 , step 1.

Only the grip portion (unthreaded) of bolts are permitted to contact disc assemblies and bolt-lengths must be equal at 180 degree positions.

a. If disc assembly (7 or 37) is installed on shaft segment, remove diametrically opposed bolts (10 or 40), thin steel washers (9 or 41), beveled washers (6 or 42), disc assembly (7 or 37), and nuts (5 or 43).

NOTE

Reinstall removed disc assembly hardward on disc assembly to ensure disc alignment on stack up.

b. Remove nut (1, figure 6-19A), steel washer (2) and plate (3) from forward end of shaft segment.

c. Slide splined adapter (4) from shaft segment and press bearing hanger (6) and sealed bearing (5) from shaft with suitable press equipment contacting bearing inner race only.

d. Remove sealed bearing (5) from bearing hanger (6) by removing nut (9), spacer (10), and spring (11).

e. Rotate sealed bearing (5) 90 degrees to notches in bearing hanger (6) and remove bearing.

f. Inspect and repair tail rotor driveshaft segments. (Refer to paragraph 6-63)

g. For overhaul refer to Section VI, Part 4.

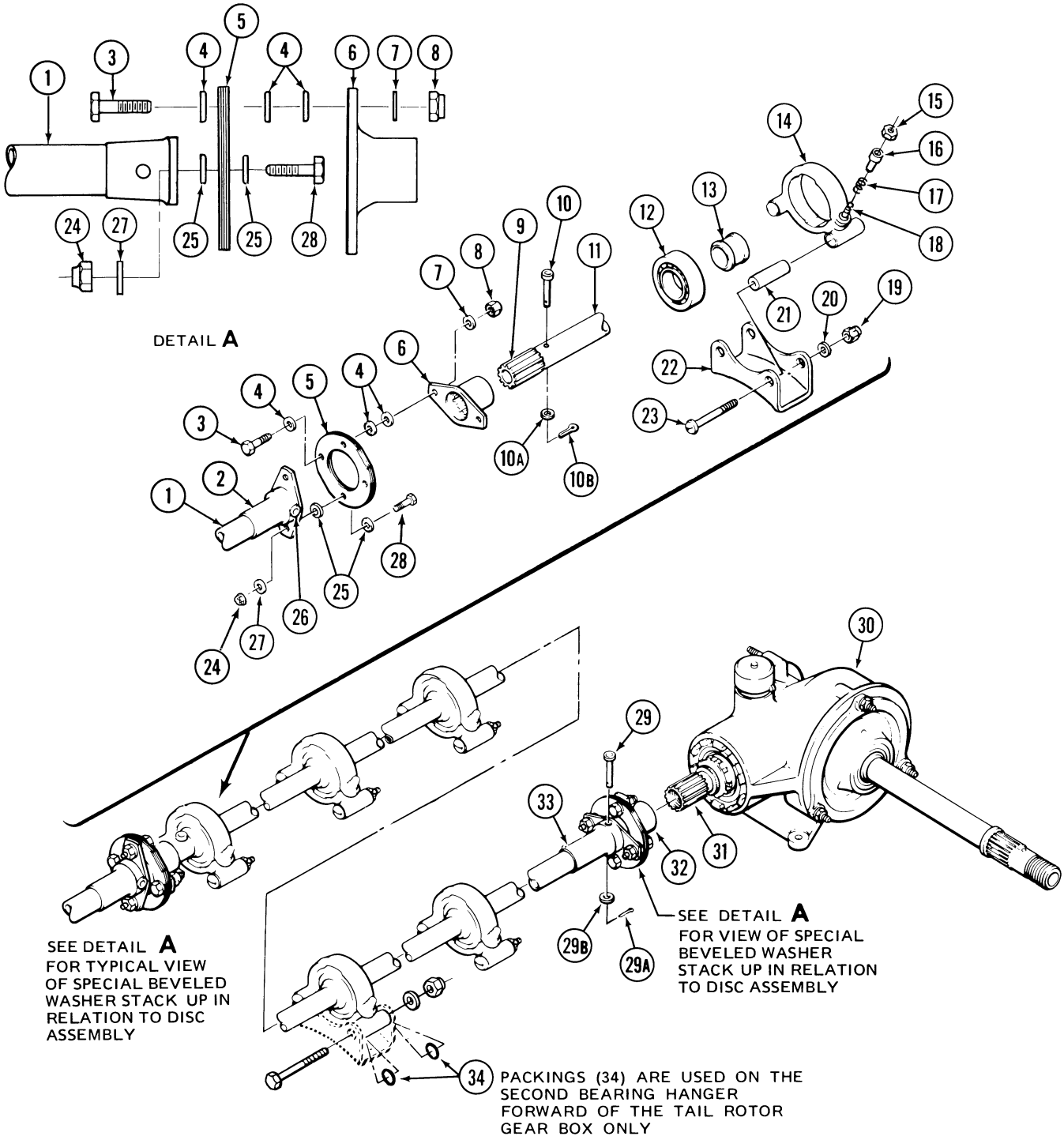

206040-206-1A
206-040-301

Figure 6-18. Long Tail Rotor Driveshaft Incorporating Clamp Type Bearing Hangers With Springs (Sheet 1 of 2)

1. Aft short shaft
2. Shaft adapter
3. Bolt
4. Beveled washer
5. Disc assembly
6. Splined adapter
7. Steel washer
8. Nut
9. Splined fitting
10. Pin
10A. Aluminum washer
10B. Cotter pin
11. Long tail rotor driveshaft
12. Bearing
13. Bearing collar
14. Bearing hanger
15. Nut
16. Spacer
17. Spring
18. Bolt
19. Nut
20. Aluminum washer
21. Bushing
22. Hanger bracket
23. Screw
24. Nut
25. Beveled washers
26. Pin, washer and cotter pin
27. Thin steel washer
28. Bolt
29. Pin
29A. Aluminum washer
29B. Cotter pin
30. Tail rotor gearbox
31. Input pinion shaft
32. Input pinion adapter
33. Shaft adapter (bonded)
34. Packings

206040-206-2B

Figure 6-18. Long Tail Rotor Driveshaft Incorporating Clamp Type Bearing Hangers With Springs (Sheet 2 of 2)

6-63. INSPECTION AND REPAIR — TAIL ROTOR DRIVE SHAFT.

a. Inspect short, long, and segmented tail rotor drive shafts for scratches and damage. Surface of shafts (steel or aluminum) to be smooth and unmarred. Replace shafts which exceed the following limits:

(1) Scratches up to 0.002 inch deep around entire circumference may be blended out using fine emery cloth (item 13, table 1-1) or india stone (item 95, table 1-1). Maximum stock removal not to exceed 0.003 inch.

(2) Scratches up to 0.005 inch deep, axial or circumferential, but not longer than 25 percent of circumference, may be blended out using No. 600 grit abrasive paper (item 15, table 1-1) or india stone (item 95, table 1-1). Maximum stock removal not to exceed 0.006 inch.

(3) On long tail rotor drive shafts, the maximum wear on diameter beneath bearing collars is 0.006 inch. Determine difference by measuring the diameter in worn area and then unworn area. Replace any bearing and collar causing a worn area.

(4) On tail rotor drive shaft segments, corrosion pitting must be polished out using No. 600 grit abrasive paper (item 15, table 1-1). Maximum depth of stock removal after cleanup shall not exceed 0.006 inch.

(a) When corrosion is removed from shaft adapter (8, figure 6-19A) at bearing seat, mating surface for bearing hanger (6) inner race, and disc assembly side of flange adapter (16, figure 6-19) caution must be used to ensure that 0.002 to 0.004 inch (TIR) runout of surfaces is not exceeded.

(b) Inspect splines of shaft adapter (8, figure 6-19A) and splined adapter (4) for chips, cracks and wear. Replace adapters and/or shafts which have damaged splines. (Refer to Overhaul, Section VI, Part 4, for spline measurement.)

(5) Any damage or repair to anodized finished surfaces requires chemical film treatment (item 6 or 32, table 1-1).

(6) Touch-up clear protective coating if repair required removal of coating. (Refer to paragraph 6-69).

b. Inspect bearing collars (13, figure 6-18) for hard or cracked material. When material is hard and/or cracked completely through longitudinally, replace. When collar causes a worn area on drive shaft, replace collar and hanger bearing.

c. Inspect hanger bearings for smoothness and evidence of overheating. Do not wipe bearing seal lip.

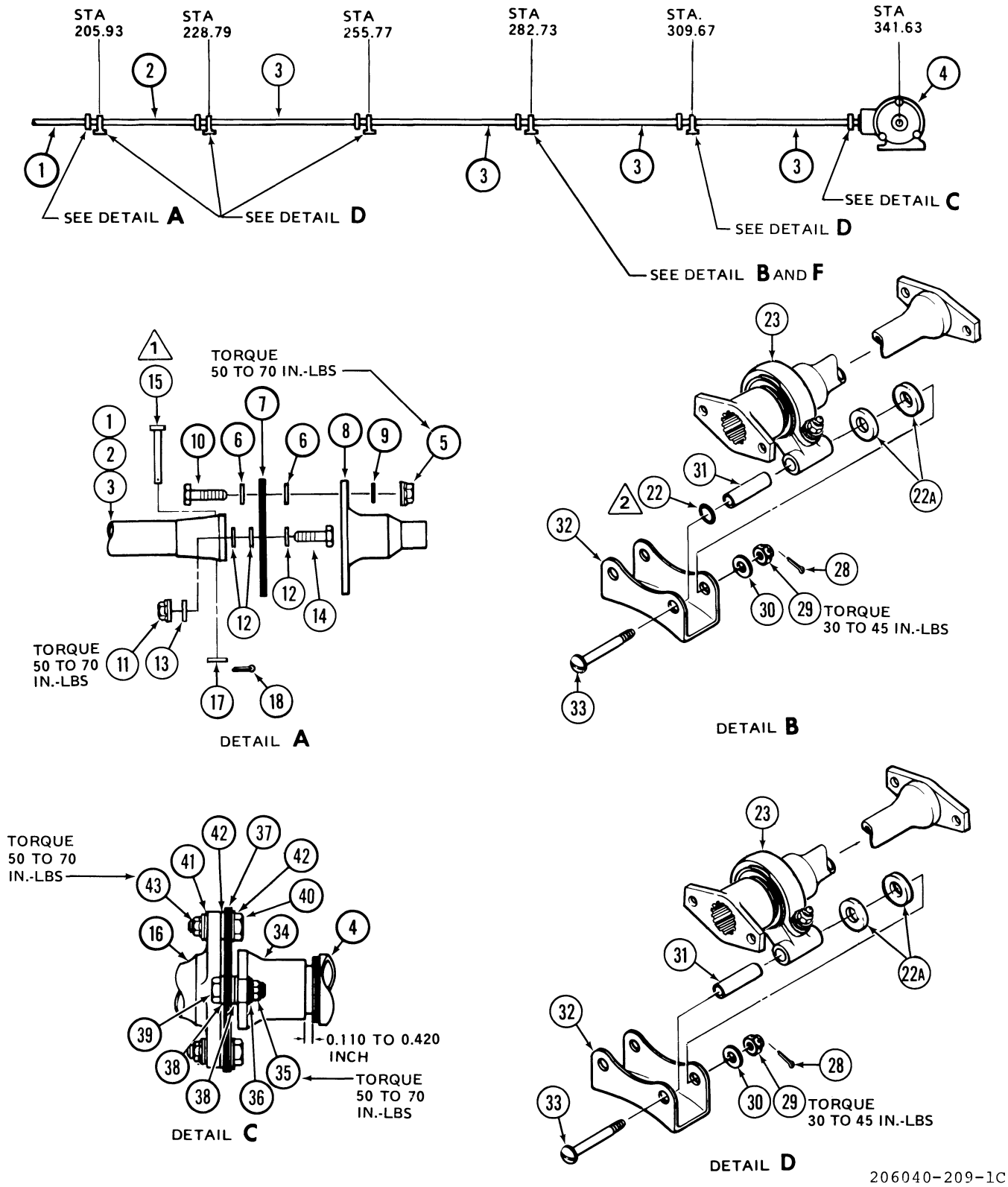

Figure 6-19. Segmented Tail Rotor Driveshafts (Sheet 1 of 2)

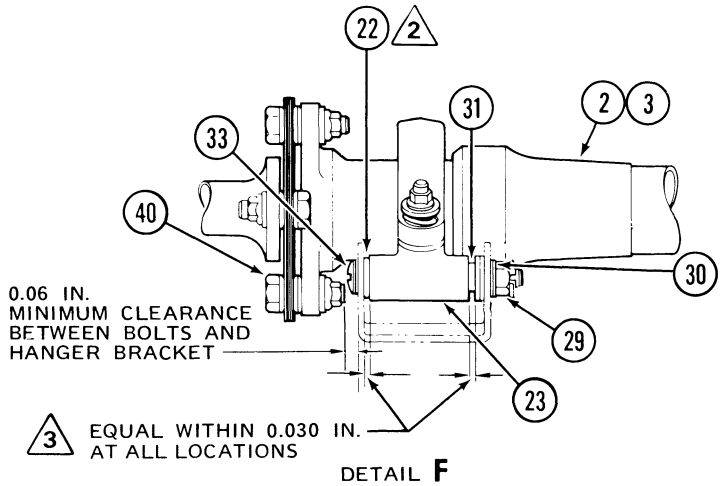

1. Short shaft
2. Forward tail rotor driveshaft segment
3. Aft tail rotor driveshaft segments (4 reqd)
4. Tail rotor gearbox
5. Nut
6. Beveled washer
7. Disc assembly
8. Splined adapter
9. Thin steel washer
10. Bolt
11. Nut
12. Beveled washer
13. Thin steel washer
14. Bolt
15. Pin
16. Flange adapter (bonded)
17. Aluminum washer
18. Cotter pin
19. Deleted
20. Deleted
21. Deleted
22. Packing
22A. Aluminum washers (AN960PD616 two required per bushing (31)
23. Bearing hanger
24. Deleted
25. Deleted
26. Deleted
27. Deleted
28. Cotter pin
29. Nut
30. Thin aluminum washer
31. Bushing
32. Hanger bracket
33. Screw
34. Input pinion adapter
35. Nut
36. Thin steel washer
37. Disc assembly
38. Beveled washer(s)
39. Bolt
40. Bolt
41. Thin steel washer
42. Beveled washer
43. Nut

NOTES:

1. Pin (15) aluminum washer (12), and cotter pin (18) are only installed in short shaft (1).
2. Packings (22) are only installed at Station 282.73
3. Disregard packing (22) width when centering bearing hanger (23) in hanger bracket (32).

206040-209-2B

Figure 6-19. Segmented Tail Rotor Driveshafts (Sheet 2 of 2)

1. Nut
2. Steel washer
3. Plate
4. Splined adapter
5. Sealed bearing
6. Bearing hanger
7. Stud
8. Shaft adapter
9. Nut
10. Spacer
11. Spring
12. Clinch bolt
13. Tail rotor driveshaft segment

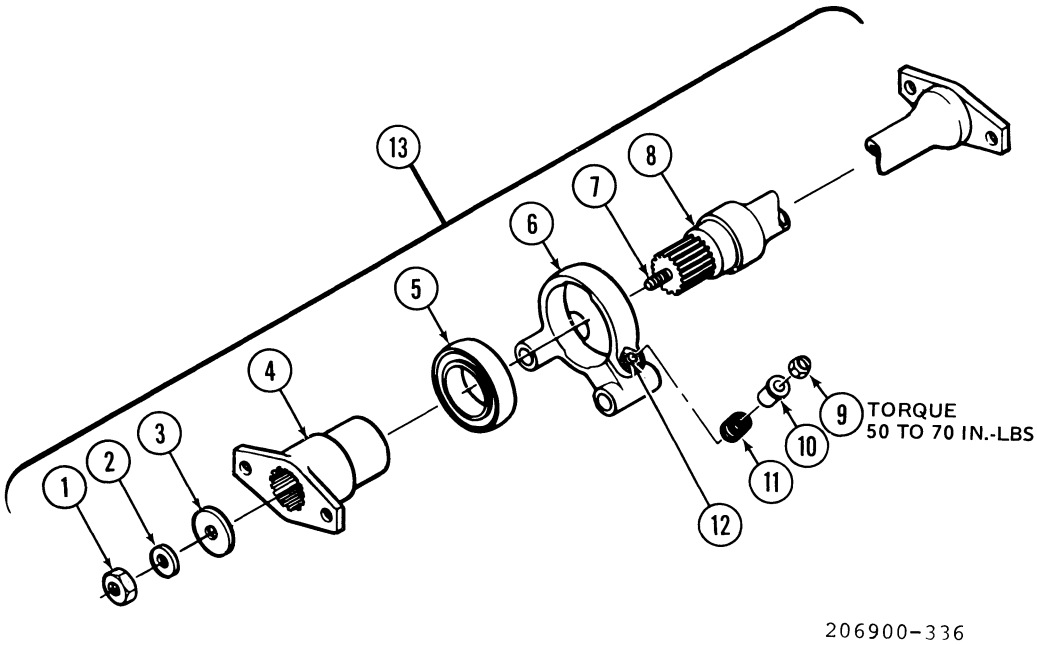

Figure 6-19A. Tail Rotor Driveshaft Segment

NOTE

The inspection for rough bearings should be accomplished after a flight while the bearings are still warm. New bearings will normally run warm for the first 15 to 20 hours of operation. Check proper alignment of the bearing to the shaft by rotating the shaft and checking for wobble of the hanger at the attaching bracket, with screws removed. (Refer to paragraph 6-66 , step k or paragraph 6-67, step i, depending on which type bearing hangers are installed.)

(1) If there is any question of bearing overheating, check bearing temperature with the use of a cold cylinder probe. The maximum recommended operating temperature is 185°F (85°C). A new bearing may run 275°F (135°C) maximum for the initial 15 to 20 hours of operation. If bearing is running hot, inspect at frequent intervals until 20 hours of operation have elapsed. If bearing temperature has not stabilized after this time, replace bearing.

(2) If there is any question of bearing serviceability it must be replaced.

d. Check tail rotor shafts for security of bonding of coupling adapters, flange adapters, and shaft adapters on long and segmented drive shafts. Check security of bonding of splined adapter on forward end of long shaft. To test bond, attempt to twist adapter on end of shaft and place end of thumb on head of pin and rotate pin in its hole, on long shafts. If pin is tight in hole and will not turn with thumb pressure, remove pin and check for failure of bond between adapter and end of shaft. Replace shaft if bond has failed.

e. On long tail rotor drive shafts inspect splines of splined adapters and splined fittings, and corresponding splines for chips, cracks and wear. Replace adapters, fittings, and/or shafts which have damaged splines. Check runout of splined fitting and long tail rotor drive shaft. Runout of splined fitting and outside diameter of shaft (within 2.0 inches from forward end of shaft, not fitting) must not exceed 0.004 inch T I R including parallelism.

f. Check adapter flanges on each end of steel forward short shaft. Check runout at adapter flange bolt. If flanges are not square within 0.004 inch, replace shaft.

g. Check adapter flanges on each end of aluminum aft short shaft. Check runout at a point on adapter flange 1.0 inch from center of adapter. If flange is not square with axis of shaft within 0.002 inch, replace shaft.

h. Check adapter flanges on aft end of long shaft for squareness. Check runout at a point on adapter flange 1.0 inch from center of adapter. If flange is not square with axis of shaft within 0.002 inch, replace shaft.

i. Check splined adapter (8, figure 6-19) and flange adapter (16) on ends of segmented shafts for squareness. Check runout at a point on adapter flanges 1.0 inch from centerline of shaft. If flange is not square with centerline within 0.004 inch replace shaft and/or splined adapter.

j. Check plate (3, figure 6-19A) for wear. Replace plate when thickness has worn to 0.080 inch or less.

k. Inspect bearing hangers (206-040-338-5) for scratches, damage and corrosion as follows:

(1) Scratches up to 0.003 inch deep located on the spherical inside diameter may be blended out provided that stock removal does not exceed 0.004 inch.

(2) Scratches, nicks and corrosion may be removed from the exterior surfaces of the bearing hanger provided that stock removal does not exceed 0.010 inch.

(3) Any damage or repair to anodized finished surfaces requires chemical film treatment (item 6 or 32, table 1-1).

l. Inspect the coupling discs for cracks, nicks, and scratches per figure 6-19B . The disc pack should be kept as an assembly, however unserviceable discs may be replaced with new discs, as required, provided the assembled disc pack is within 0.115 to 0.127 inch thick. The disc assemblies vary between 9 to 12 plates and each plate varies between 0.010 to 0.014 inch thick. When disc pack is installed, check for gaps between discs. Gaps greater than 0.005 inch are not acceptable. If gaps are excessive, loosen bolts, rotate discs back and forth, then uniformly torque nuts 50 to 70 inch-pounds and recheck for gaps.

m. Inspect coupling discs for fretting and corrosion.

CAUTION

Do not use abrasive cleaning materials.

n. Clean grease and oil from each disc using drycleaning solvent (item 12).

o. Soak disc in alcohol phosphoric cleaner (item 33) per note 4.

p. Clean light fretting and pitted areas by scrubbing with a soft rubber eraser. If disc cannot be cleaned, it must be discarded.

CAUTION

The grain of each disc runs parallel to the indexing flat edges. When assembling disc pack assembly, it is necessary to alternate indexing flats to obtain alternate grain direction.

6-64. INSTALLATION — FORWARD AND AFT SHORT SHAFTS.

a. Apply a thin film of anti-seize compound (item 42 or 43, table 1-1) to external splines of freewheeling shaft (1, figure 6-15) and each end of fan shaft (4). On helicopters 4 through 1251 apply compound to external splines of long tail rotor drive shaft (7). Also apply compound to internal splines of splined adapters (2, 8, 9 and 16).

Note

On helicopters 1252 and subsequent the long tail rotor driveshaft system has been replaced by a five section tail rotor driveshaft system. Splined adapter (16) as used on helicopters 1252 and subsequent is part of the forward tail rotor driveshaft segment (2, figure 6-19) and is secured to shaft segment and is not normally removed when the aft short shaft is removed.

b. Install splined adapters (2, 8 and 9, figure 6-15) on freewheeling shaft (1) and ends of fan shaft (4). On helicopters 4 through 1251 install splined adapter (16) on forward end of long tail rotor drive shaft (7).

c. Install retainer springs (10), if desired. Springs are no longer used or available as spares.

d. Install pins (15) in the ends of both the forward short shaft (3) and aft short shaft (6). Secure each pin with aluminum washer (15A) and cotter pin (15B).

e. Position disc assemblies (17) on each end of forward short shaft (3) and aft short shaft (6), if removed, and secure as follows:

CAUTION

After a disc assembly has been run on a helicopter, discs should not be changed from original pack except as noted in paragraph 6-63, step 1.

CAUTION

The grain of each disc runs parallel to the indexing flat edges. When assembling disc pack assembly, it is necessary to alternate indexing flats to obtain alternate grain direction.

Only the grip portion (unthreaded) of bolts are permitted to contact disc assemblies and bolt lengths must be equal at 180 degree positions. Since different length bolts are used, ensure bolt threads do not bottom out.

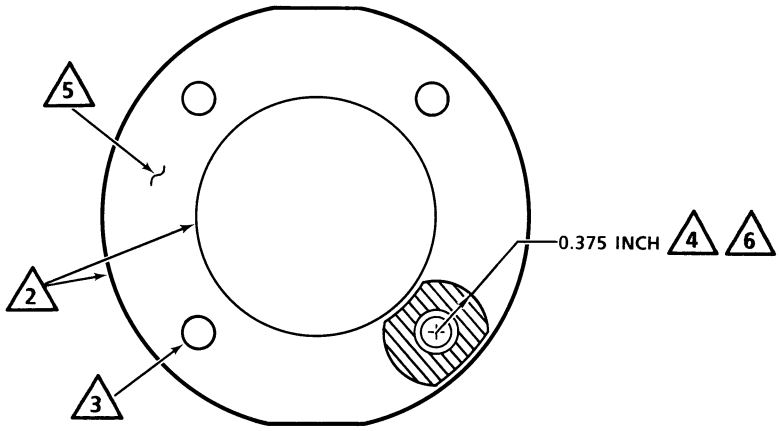

32721 DISC ASSEMBLY

NOTES

1. Cracks, nicks, and scratches are not allowed.
2. No damage allowed within 0.050 inch of any edge.
3. Circular scratches are acceptable on outside faces of outer disc adjacent to bolt holes.
4. Areas of light fretting and pitting (surface distress less than 0.001 inch) which can be repaired by soaking in alcohol phosphoric cleaner Turco WONo 1.
5. Random light fretting and corrosion pitting are allowed, if no more than 5 percent of each quadrant is affected, and pitted areas do not exceed 0.050 inch diameter.
6. Light fretting and corrosion pitting is allowed, if no more than 40 percent of area is affected (4 places each side).

206040-447B

Figure 6-19B. Disc Assembly Wear Limits

(1) Install two diametrically opposed bolts (11), beveled washers (12), thin steel washers (13) and nuts (14). Install beveled washers (12) with rounded edge side in contact with disc assembly (17). Torque nuts (14) uniformly 50 to 60 inch-pounds.

CAUTION

After disc assembly is installed, inspect for distortion resulting in gaps between the individual discs. If any gaps are detected by visual examination, measure gaps with a feeler gage. Maximum allowable gap is 0.005 inch. If any gaps are found which exceed this limit, loosen bolts, rotate disc back and forth, and uniformly tighten bolts to required torque. Recheck gaps. If gaps still exceed limit, replace disc pack.

(2) Check that beveled washers (12) are correctly installed. Assemble remaining three disc assemblies (17) to driveshafts, observing preceding caution statements.

f. Carefully position forward short shaft (3) between installed splined adapters (2 and 9) and secure with two diametrically opposed bolts (21), thin steel washers (20), beveled washers (19), and nuts (18). Install beveled washers (19) with rounded edge side in contact with disc assemblies (17) and flanges of adapters. Torque nuts (18) 50 to 70 inch-pounds.

g. Carefully position aft short shaft (6) between installed splined adapters (8 and 16) and secure with two diametrically opposed bolts (21), thin steel washers (20), beveled washers (19), and nuts (18). Install beveled washers (19) with rounded edge side in contact with disc assemblies (17) and flanges of adapters. Torque nuts (18) 50 to 70 inch-pounds.

h. Apply corrosion protective coating to aft short shaft (6). (Refer to paragraph 6-69 , omit steps g and h.)

6-65. Deleted.

6-66. INSTALLATION – LONG TAIL ROTOR DRIVE SHAFT INCORPORATING CLAMP TYPE BEARING HANGERS WITH SHIMS.

a. Hold bearings (11, figure 6-17 90 degrees to notches in bearing hangers (14) and insert bearing half way through hangers, then rotate bearing into same plane as hangers.

Note

Bearings are sealed and do not require lubrication.

b. Install bolt (17), steel washer (16), aluminum washer (15), and shim (18) in bearing hanger (14); torque bolt 50 to 70 inch-pounds. Bearing should not pivot or rotate radially under hand pressure.

c. Check bearing fit by loosening bolt (17) and install a 0.002 inch test shim with existing shim in hanger clamp slot and torque bolt 50 to 70 inch-pounds. Using hand pressure bearing should pivot, but not have radial looseness.

Note

Shims used in bearing hanger clamp slots are available in 0.002 inch thickness differences noted by dash numbers on part. Use proper thickness shim to obtain final proper fit. (Shims are made from 5052 aluminum alloy, Temp H-34, H-36 or H-38 stock.)

d. After obtaining proper fit of bearing to hanger remove 0.002 inch test shim, clamp bolt (17), washers (15 and 16) and bearing (11) from bearing hanger (14) and apply a thin coat of corrosion preventive compound (item 24, table 1-1) to bolt grip (threads optional) and to entire area of hanger bearing clamping surface I.D.) and to outer diameter of bearing, using caution to ensure that compound does not contact bearing grease seal.

e. Reinstall bearing (11, figure 6-17) and bolt (17) and washers (15 and 16) in hanger ensuring that original shim (18) remains in clamp slot and aluminum washer (15) is next to hanger.

f. Insert new rubber collar (12) inside each tail rotor drive shaft bearing (11).

g. Position tail rotor drive shaft hanger bearing assemblies on long tail rotor drive shaft (10) as follows:

(1) Insert an NAS617-10 packings in radius groove between splined fitting (23) and forward end of long tail rotor drive shaft (10) to prevent rubber collars (12) from catching in groove while being installed. Remove pin (9) if not previously accomplished.

(2) Clean shaft thoroughly. Apply HR lubricant or KY jelly (item 65, table 1-1) to shaft with a clean cloth to aid in installing hanger bearing assemblies. If lubricant or jelly becomes dry add a small amount of water.

(3) Position each hanger bearing assembly on shaft to dimensions shown in figure 6-20, and corresponding with hanger brackets (21) on tailboom. Wipe shaft dry. Bearing hangers shall be installed with clamp side to left side of tailboom.

(4) Remove packing from radius groove in shaft. (Refer to step 1.) Install pins (9 and 30). Secure each pin, with aluminum washers (9A and 30A) and cotter pins (9B and 30B).

(5) Apply a thin film of anti-seize compound (item 42 or 43, table 1-1) to splines of splined fitting (23), and input pinion shaft (32). Also apply compound to mating splines of splined adapter (6) and input pinion adapter (33). Install adapters.

h. Position long tail rotor drive shaft (10) along top of tailboom and insert bearing hangers (14) in hanger brackets (21). Install two bushings (13) in each bearing hanger (14) and insert two screws (22) in each. Do not install aluminum washers (20), nuts (19) or packings (34) at this time.

CAUTION

Only the grip portion (unthreaded) of bolts are permitted to contact disc assemblies and bolt-lengths must be equal at 180 degree positions.

i. Install two diametrically opposed bolts (3) in the forward and aft disc assemblies. Install beveled washers (4) with rounded edge side in contact with disc assembly and flange of splined adapter (6) and input pinion adapter (33). Install thin steel washers (7) on aft side of adapters and install nuts (8). Torque nuts (8) 50 to 70 inch-pounds. Inspect all disc assemblies for distortion resulting in gaps between the individual discs. If any gaps are detected by visual examination, measure gaps with a feeler gage. Use caution and avoid making gaps wider with the feeler gage. Maximum allowable gap is 0.005 inch. If any gaps are found which exceed this limit, loosen bolts, rotate disc back and forth, and uniformly tighten bolts to required torque. Recheck gaps. If gaps still exceed limit, replace disc pack.

CAUTION

After a disc assembly has been run on a helicopter, discs should not be changed from original pack except as noted in paragraph 6-63, step 1.

CAUTION

The grain of each disc runs parallel to the indexing flat edges. When assembling disc pack assembly, it is necessary to alternate indexing flats to obtain alternate grain direction.

CAUTION

Install beveled washers exactly as described and illustrated with rounded edge side in contact with disc assembly or flange of adapters. Failure to comply may result in disc failure.

j. Position the five bearing hangers (14) to obtain 0.110 to 0.170 inch dimension between end of input pinion adapter (33) and shoulder of input pinion shaft (32) on tail rotor gearbox (31). Also position each bearing hanger (14) to center in hanger brackets (21) within 0.060 inch of center. (See figure 6-21)

k. Check alignment of each bearing collar (12, figure 6-17) and bearing (11) to the long tail rotor drive shaft as follows:

(1) Remove screws (22) and bushings (13) on one bearing hanger (14) at a time.

(2) Install a dial indicator on the bearing to be checked as illustrated in figure 6-22. The box section illustrated below the bearing hanger in this photograph simulates the tailboom. Note that the dial indicator plunger is contacting the top portion of the hanger rim. Adjust the dial indicator support so the dial indicator plunger is pre-loaded to give plus or minus runout reading when the shaft is rotated.

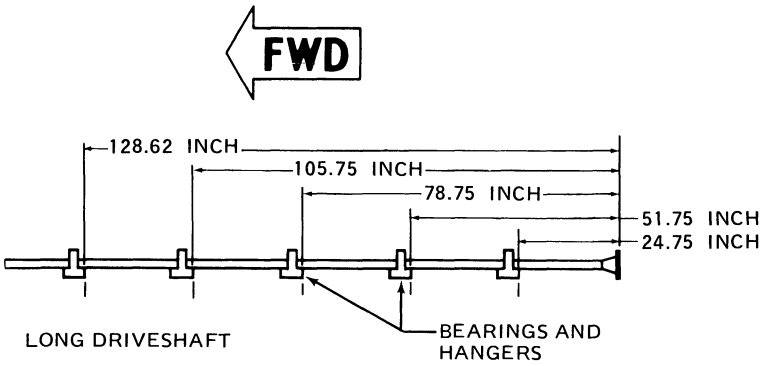

POSITION BEARINGS ON DRIVE SHAFT AT LOCATIONS SHOWN PRIOR TO INSTALLATION OF DRIVE SHAFT ON HELICOPTER.

206040-205

Figure 6-20. Dimensions for Initial Bearing Installation on Long Tail Rotor Driveshaft

(3) Place one bushing (13, figure 6-17) or other suitable support between one ear of bearing hanger (14) and tailboom and at right angles to driveshaft. This will prevent hanger from turning but will permit hanger to wobble if collar and bearing inner race are not positioned square to shaft.

(4) Direct assistant to grasp driveshaft about 4 feet away from bearing being checked and rotate the shaft toward the bushing placed under the bearing hanger. Observe the dial indicator. If the bearing inner race and collar are positioned square to the tail rotor shaft within 0.004 inch indicated runout, the bearing inner race and collar position is satisfactory. If dial indicator runout is in excess of this limit, reposition the collar (12) on the shaft.

(5) After bearing and collar are positioned square with shaft within limits, install two bushings (13, figure 6-17 and screws (22). Repeat this procedure to check alignment of remaining four bearings and collars.

(6) Recheck for 0.110 to 0.170 inch dimension at input pinion adapter (33) and shoulder of input pinion shaft (32) after completion of bearing collar alignment check.

(7) Install four packings (34) two on each end of bushings (13) (forward and aft) at the second bearing hanger forward, of the tail rotor gear box (31).

Note

The packings (34) installed in the preceeding step are used at the second bearing hanger forward of the tail rotor gearbox only.

(8) Install aluminum washers (20) and nuts (19) on all screws (22). Torque nuts (19) to 30 to 45 inch-pounds and secure with cotter pins.

Note

Additional washers may be used if screw is too long for proper cotter pin installation.

l. Torque each bolt (17) to 5 inch-pounds if not previously accomplished.

m. Prepare helicopter for ground run-up and accomplish the following:

WARNING

Do not grasp tail rotor driveshaft during ground run or rotor coastdown.

(1) Ground run helicopter and during run-up, remove all torque from bolt (17, figure 6-17) and bearing (11) as necessary to allow bearing outer race to move in bearing hanger (14), thus ensuring alignment of bearing outer race to bearing hanger.

CAUTION

Do not allow bearing outer race to spin excessively, less than 1/4 turn is adequate.

(2) Torque bolts (17) 50 to 70 inch-pounds and secure with 0.032 inch lockwire (item 19, table 1-1).

(3) Continue helicopter ground run for 15 minutes and check bearings (11) for signs of overheating. Maximum recommended operating temperature is 185°F (85°C) maximum for the initial 15 to 20 hours of operation. If bearings are running hot, inspect at frequent intervals until 20 hours of operation have elapsed. If bearing temperature has not stabilized at this time, replace bearing.

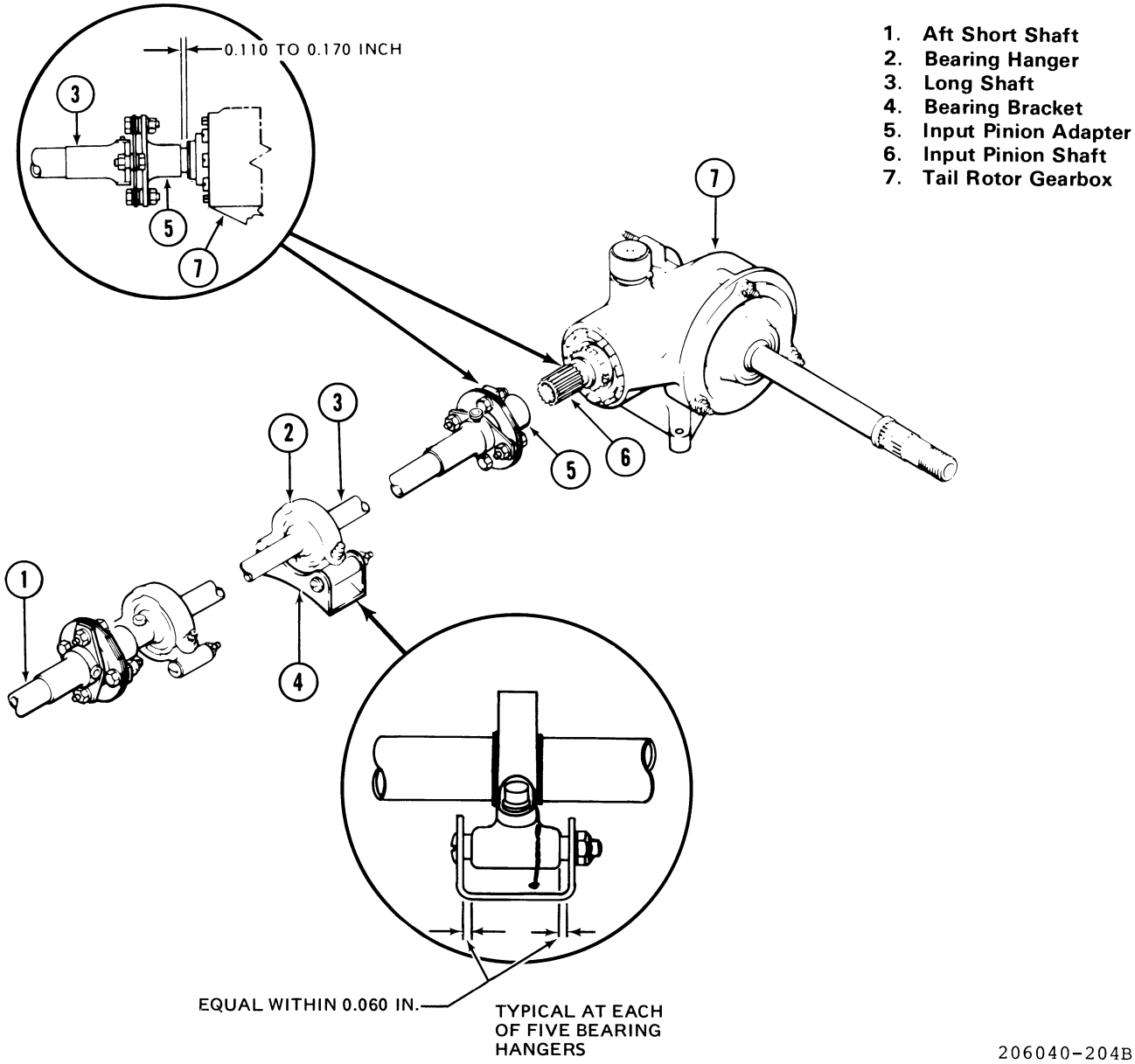

Figure 6-21. Long Tail Rotor Driveshaft Bearing Hanger Position Check (Typical)

Note

A cold cylinder probe may be used to provide precise measurement of bearing temperature.

n. Check runout of long tail rotor driveshaft with a dial indicator after ground run-up. Runout within 1.0 inch of bearings (11) centerline must not exceed 0.006 inch TIR. Runout midway between each bearing hanger must not exceed 0.010 inch TIR.

o. Apply corrosion protective coating to tail rotor drive shaft. (Refer to paragraph 6-69.)

6-67. INSTALLATION – LONG TAIL ROTOR DRIVE SHAFT INCORPORATING CLAMP TYPE BEARING HANGERS WITH SPRINGS.

a. Apply a thin film of corrosion preventive compound (item 24A, table 1-1) to shank of bolts (18, figure 6-18 , springs (17), spacers (16) and outside diameter of bearings (12). Apply a thin film of corrosion preventive compound (item 24A, table 1-1) to the inside mating surfaces of bearing hangers (14). Do not allow corrosion preventive compound to contact the bearing seals.

b. Hold bearing (12) 90 degrees to notches in bearing hanger (14) and insert bearing half way through hanger, then rotate bearing into same plane or hanger. Assemble the four remaining bearing and hanger assemblies.

CAUTION

Ensure that only spacers (16) measuring 0.545 to 0.550 inch in length from flanged end are used in the five bearing hangers (14). (Refer to figure 6-21A.)

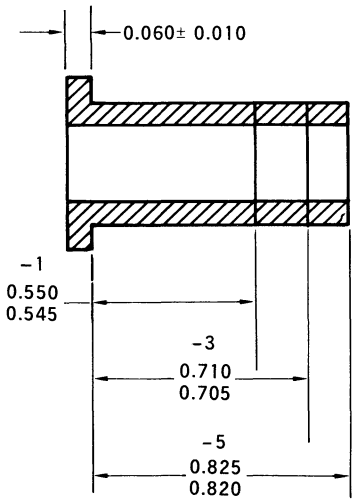

206-040-351 1, -3. -5 SPACER

206040-312

Figure 6-21A. Spacer

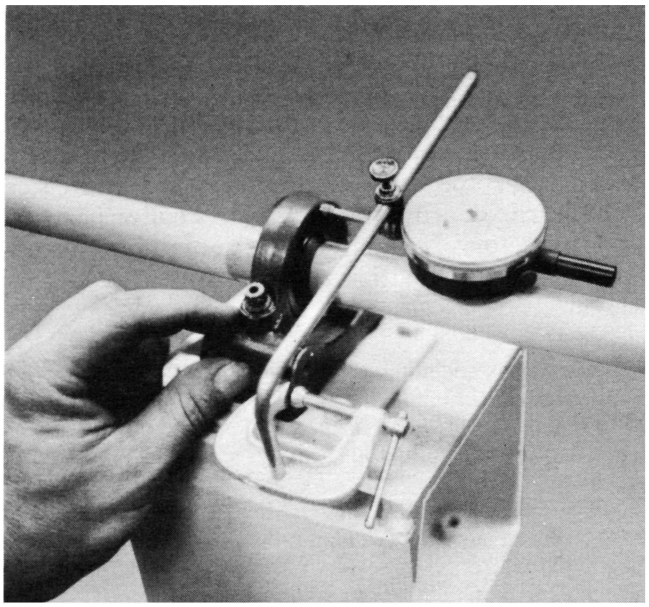

206040-132

Figure 6-22. Dial Indicator Attachment

c. Install springs (17), spacers (16) and nuts (15) in each of the five bearing hangers (14). Torque nuts (15) 50 to 70 inch-pounds.

d. Insert new rubber bearing collars (13) inside each bearing (12).

e. Position tail rotor drive shaft bearing hanger assemblies on long tail rotor drive shaft (11) as follows:

(1) Insert a (NAS617-10) packing in radius groove between splined fitting (9) and forward end of long tail rotor drive shaft (11) to prevent rubber bearing collars (13) from catching in groove while being installed. Remove pin (10) if not previously accomplished.

(2) Clean shaft thoroughly. Apply HR lubricant (item 65, table 1-1) or talcum powder to shaft with a clean cloth to aid in installing bearing assemblies. If lubricant or jelly becomes dry add a small amount of water.

(3) Position each bearing hanger assembly on shaft to dimensions shown in figure 6-20 , and corresponding with hanger bracket (22, figure 6-18) on top of the helicopters tailboom. Bearing hangers shall be installed with clamp side to left side of tailboom.

(4) Remove packing from radius groove and wipe shaft dry.

(5) Install pins (10 and 29) and secure with aluminum washers (10A and 29A) and cotter pins (10B and 29B).

(6) Apply a film of anti-seize compound (item 42 or 43, table 1-1) to splines of splined fitting (9, figure 6-18) and input pinion shaft (31). Also apply compound to mating splines of splined adapter (6) and input pinion adapter (32) and install adapters.

f. Position long tail rotor drive shaft (11) along top of tailboom and insert bearing hangers (14) in hanger brackets (22). Install two bushings (21) in each bearing hanger (14) and insert two screws (23) in each. Do not install aluminum washers (20), nuts (19), or packings (34) at this time.

CAUTION

Only the grip portion (unthreaded) of bolts are permitted to contact disc assemblies and bolt-lengths must be equal at 180 degree positions.

g. Install two diametrically opposed bolts (3) in the forward and aft disc assemblies. Install beveled washers (4) with rounded edge side in contact with disc assembly and flange of splined adapter (6) and input pinion adapter (32). Install thin steel washers (7) on aft side of adapters and install nuts (8). Torque nuts (8) 50 to 70 inch-pounds. Inspect all disc assemblies for distortion resulting in gaps between the individual discs. If any gaps are detected by visual examination, measure gaps with a feeler gage. Use caution and avoid making gaps wider with the feeler gage. temperature has not stabilized after this time, replace bearing. (Refer to paragraph 6-63 , for additional bearing inspection data.)

Maximum allowable gap is 0.005 inch. If any gaps are found which exceed this limit, loosen bolts, rotate disc back and forth, and uniformly tighten bolts to required torque. Recheck gaps. If gaps still exceed limit, replace disc pack.

CAUTION

After a disc assembly has been run on a helicopter, discs should not be changed from original pack except as noted in paragraph 6-63 , step 1.

The grain of each disc runs parallel to the indexing flat edges. When assembling disc pack assembly, it is necessary to alternate indexing flats to obtain alternate grain direction.

Install beveled washers exactly as described and illustrated with rounded edge side in contact with disc assembly or flange of adapters. Failure to comply may result in disc failure.

h. Position the five bearing hangers (14) to obtain 0.110 to 0.170 inch dimension between end of input pinion adapter (32) and shoulder of input pinion shaft (31) on tail rotor gearbox (30). Also position each bearing hanger (14) to center in hanger brackets (22), within 0.060 inch of center. (See figure 6-21.)

i. Check alignment of each bearing collar (13, figure 6-18) and bearing (12) to the long tail rotor drive shaft as follows:

(1) Remove screws (23) and bushings (21) on one bearing hanger (14) at a time.

(2) Install a dial indicator on the bearing to be checked as illustrated in figure 6-22 . The box section illustrated below the bearing hanger in this photograph simulates the tailboom. Note that the dial indicator plunger is contacting the top portion of the hanger rim. Adjust the dial indicator support so the dial indicator plunger is preloaded to give plus or minus runout reading when the shaft is rotated.

(3) Place on bushing (21, figure 6-18) or other suitable support between one ear of bearing hanger (14) and tailboom and at right angles to driveshaft. This will prevent hanger from turning but will permit hanger to wobble if collar and bearing inner race are not positioned square to shaft.

(4) Direct assistant to graps driveshaft about 4 feet away from bearing being checked and rotate the shaft toward the bushing placed under the bearing hanger. Observe the dial indicator. If the bearing inner race and collar are positioned square to the tail rotor shaft within 0.004 inch indicated runout, the bearing inner race and collar position is satisfactory. If dial indicator runout is in excess of this limit, reposition the bearing collar (13) on the shaft.

(5) After bearing and collar are positioned square with shaft within limits, install two bushings (21, figure 6-18) and screws (23). Repeat this procedure to check alignment of remaining four bearings and collars.

(6) Recheck for 0.110 to 0.170 inch dimension at input pinion adapter (32) and shoulder of input pinion shaft (31) after completion of bearing collar alignment check.

(7) Install four packings (34), two on each bushing (21) (forward and aft) of the second bearing hanger (14) forward of the tail rotor gearbox (30).

Note

The packings (34) installed in the preceding step are used at the second bearing hanger forward of the tail rotor gearbox only.

(8) Install aluminum washers (20) and nuts (19) on screws (23). Torque nuts (19) 30 to 45 inch-pounds and secure with cotter pins.

Note

Additional washers may be used if screw is too long for proper cotter pin installation.

j. Retorque nuts (8 and 24) 50 to 70 inch-pounds.

k. Prepare helicopter for ground run-up and accomplish the following:

WARNING

Do not grasp tail rotor driveshaft during ground run or rotor coastdown.

CAUTION

Do not exceed one-minute run-up or bearings may spin excessively in hangers.

(1) Prior to run-up, lubricate bearings until grease purges past seals. Loosen hanger clamping nuts (15) until all preload is removed from springs (17) and springs can be turned by hand, then using non-sharp tool in split line of hanger, pry open slightly and move bearing slightly by hand to ensure freedom. Remove tool from hanger. Run up helicopter to 60 to 62 percent rotor rpm for 45 seconds to one minute. Start timing when rotor starts turning. Shut down and torque nuts (15) 50 to 70 in-lbs. Wipe off any grease from outside of bearings.

(2) Ground run helicopter for 15 minutes and check bearings (12) for signs of overheating. Maximum recommended operating temperature is 185°F (85°C). A new bearing may run 275°F (135°C) maximum for the initial 15 to 20 hours of operation. If bearings are running hot, inspect at frequent intervals until 20 hours of operation have elapsed. If bearing temperature has not stabilized after this time, replace bearing. (Refer to paragraph 6-63 for additional bearing inspection data).

Note

A cold cylinder probe may be used to provide precise measurement of bearing temperature.

l. Check runout of long tail rotor shaft with a dial indicator after ground run up. Runout within 1.0 inch of bearings centerline must not exceed 0.006 inch TIR. Runout midway between each bearing hanger must not exceed 0.010 inch TIR.

m. Apply corrosion protective coating to tail rotor drive. (Refer to paragraph 6-69)

6-68. INSTALLATION — SEGMENTED TAIL ROTOR DRIVE SHAFT.

a. Apply a light film of corrosion preventive compound (item 24 or 24A, (as noted), table 1-1) to the following parts surfaces prior to assembly of shaft segments.

(1) Bearing seat surface on bonded shaft adapters (8, figure 6-19A) (item 24).

(2) Inside and outside races of sealed bearings (5) (item 24A). Do not allow compound to contact bearing seals.

(3) Inside diameter of bearing hangers (6) at bearing outer race mating surface (item 24A).

(4) Grip and threads of clinch bolts (12), springs (11) and spacers (10) (item 24).

(5) Inboard surface of plates (3) that will mate with splined adapters (4) (item 24).

b. Assemble tail rotor driveshaft segment as follows:

(1) Hold sealed bearing (5) 90 degrees to notches in bearing hanger (6) and insert bearing halfway through hanger, then rotate bearing into plane of hanger.

CAUTION

Ensure that only spacers (10) measuring 0.545 to 0.550 inch in length from flanged end are used in the five bearing hangers (6). (Refer to figure 6-21A.)

(2) Install spring (11), spacer (10) and loosely install nut (9) on clinch bolt (12). Nut (9) may be torqued, if required, to maintain bearing and hanger alignment. Do not exceed torque of 50 to 70 inch-pounds on nut (9).

(3) Press bearing and hanger assembly onto shaft adapter (8) until inner race of bearing is seated flush and square, and clamp side will be to the left side of tailboom.

(4) Apply a light film of anti-seize compound (item 42 or 43) to internal surfaces of splined adapters (4) and external splines of shaft adapters (8).

(5) Install splined adapter (4) on shaft adapter (8) and seat with hand pressure. Install plate (3), steel washer (2), and nut (1) on stud (7). Torque nut (1) 30 to 50 inch pounds.

(6) Assemble the remaining four driveshaft segments.

d. Install pin (15, figure 6-19) through short shaft (1), if removed. Secure with aluminum washer (17) and cotter pin (18).

e. Install bushings (31) into bearing hanger (23). (See detail D). Place two aluminum washers (22A) on aft end of each bushing (31). Position tail rotor driveshaft segment, bushings, and washers into hanger bracket (32) at station 205.93. Install screws (33), thin aluminum washers (30), and nuts (29). Torque nuts (29) 30 to 45 inch-pounds and secure with cotter pin (28).

f. Apply anti-seize compound (item 42 or 43) to splines of input pinion adapter (34) and input

pinion shaft of tail rotor gear box (4) and install input pinion adapter on input pinion shaft of tail rotor gear box.

g. Install remaining tail rotor driveshaft segments at stations 228.79, 255.77, and 309.67 per step d.

h. Install tail rotor driveshaft segment at station 282.73 as follows:

(1) Install bushings (31) into bearing hanger (23). Place packing (22) on forward end of each bushing (31). (See detail B.)

(2) Place two aluminum washers (22A) on aft end of each bushing (31). Position tail rotor driveshaft segment, bushings, packings, and washers into hanger bracket (32) at station 282.73.

(3) Install screws (33), thin aluminum washers (30), and nuts (29). Torque nuts (29) 30 to 45 inch-pounds and install cotter pins (28).

i. Install disc assemblies (7) and center bearing hangers (23) in hanger brackets (32) within 0.030 inch as follows:

CAUTION

After a disc assembly has been run on a helicopter, discs should not be changed from original pack, except as noted in paragraph 6-63, step 1.

The grain of each disc runs parallel to the indexing flat edges. When assembling disc pack assembly, it is necessary to alternate indexing flats to obtain alternate grain direction.

Only the grip portion (unthreaded) of bolts are permitted to contact disc assemblies and bolt lengths must be equal at 180 degrees positions.

(1) Position disc assembly (7) between flanges of adapters and install diametrically opposed bolts (10) with thin steel washers (9), beveled washers (6) and nut (5) as shown in detail A. Check that rounded edge side of beveled washers (6) are contacting disc. Torque nuts (5) 50 to 70 inch-pounds. (See figure 6-19, detail A.)

(2) Install diametrically opposed bolts (14), thin steel washers (13), beveled washers (12) and nuts (11) as shown in detail A. Check that rounded edge side of beveled washers (12) are contacting disc and flange of forward adapter. Torque nuts (11) 50 to 70 inch-pounds. Inspect disc assemblies for distortion resulting in gaps between the individual discs. If any gaps are detected by visual examination, measure gaps with a feeler gage. Use caution and avoid making gaps wider with the feeler gage. Maximum allowable gap is 0.005 inch. If any gaps are found which exceed this limit, loosen bolts, rotate disc back and forth, and uniformly tighten bolts to required torque. Recheck gaps. If gaps still exceed limit, replace disc pack.

(3) Check alignment of bearing hanger (23) in hanger bracket (32), to be centered within 0.030 inch. (See detail F, for typical bearing hanger position check.) If bearing hanger is not centered, add or remove beveled washer at adjoining coupling assembly to align hanger as follows:

(a) One beveled washer (12) may be removed adjacent to the flange adapter (16) to align bearing hanger (23). Beveled washer quantities must be equal at 180 degree positions. Remaining beveled washers must have rounded edge side in contact with the disc assembly (7). Torque nuts (11) 50 to 70 inch-pounds. Check bearing hanger alignment.

(b) One beveled washer (6) may be added at this location to align bearing hanger (23). Beveled washer quantities must be equal at 180 degree positions. Beveled washers must have rounded edge side in contact with disc assembly (7), the added beveled washer must have rounded edge side in contact with flange of splined adapter (8). Torque nuts (5) 50 to 70 inch-pounds. Check bearing hanger alignment.

(4) Repeat step (3) on the remaining four aft tail rotor drive shaft segments (3). Recheck all hanger bearings (23) for centering within 0.030 inch.

j. Install aft disc assembly (37) between last aft tail rotor drive shaft segment (3) and input pinion adapter (34) as follows:

(1) Install two diametrically opposed bolts (40), with thin steel washers (41), beveled washers (42), and nuts (43). Check that rounded edge side of beveled washers (42) are contacting disc assembly

All data on page 6-50A/6-50B deleted.

(37) and bolt heads are adjacent to disc assembly (37). Torque nuts (43) 50 to 70 inch-pounds.

(2) Install diametrically opposed bolts (39), beveled washers (38), thin steel washers (36), and nuts (35). Check that rounded edge side of beveled washers (38) are contacting disc (37) and flange of input pinion adapter (34), and that bolt heads are adjacent to disc assembly. Torque nuts (35) 50 to 70 inch-pounds. Inspect disc assemblies for distortion resulting in gaps between the individual discs. If any gaps are detected by visual examination, measure gaps with a feeler gage. Use caution and avoid making gaps wider with the feeler gage. Maximum allowable gap is 0.005 inch. If any gaps are found which exceed this limit, loosen bolts, rotate disc back and forth, and uniformly tighten bolts to required torque. Recheck gaps. If gaps still exceed limit, replace disc pack.

(3) Check for a clearance of 0.110 to 0.420 inch from end of input pinion adapter (34) to shoulder on input pinion shaft of tail rotor gearbox (4). (See detail A). If required clearance is not available, add or remove beveled washers as required, at disc assembly (37) as follows:

(a) One beveled washer (38) may be removed at this location. Beveled washer quantities must be equal at 180 degree positions. Remaining beveled washers must have rounded edge side of contact with the disc assembly (37). Torque nuts (35) 50 to 70-inch-pounds. Check adapter clearance.

(b) One beveled washer (42) may be added at this location. Beveled washer quantities must be equal at 180 degree positions. Beveled washers must have rounded edge side in contact with disc assembly (37), and added beveled washer must have rounded edge side in contact with flange of flange adapter (16). Torque nuts (43) 50 to 70 inch-pounds. Check adapter clearance.

j. Retorque all nuts (5 and 11) 50 to 70 inch-pounds.

k Prepare helicopter for ground run-up and accomplish the following:

WARNING

Do not grasp tail rotor drive shaft during ground run or rotor coastdown.

CAUTION

Do not exceed one-minute run-up or bearings may spin excessively in hangers.

(1) Prior to run-up, lubricate bearings until grease purges past seals. Loosen hanger clamping nuts (9, figure 6-19A) until all preload is removed from springs (11) and springs can be turned by hand, then using non-sharp tool in split line of hanger, pry open slightly and move bearing slightly by hand to ensure freedom. Remove tool from hanger. Run up helicopter to 60 to 62 percent rotor rpm for 45 seconds to one minute. Start timing when rotor starts turning. Shut down and torque nuts (9) 50 to 70 in-lbs. Wipe off any grease from outside of bearings.

(2) Ground run helicopter for 15 minutes and check sealed bearings (5) for signs of overheating. Maximum recommended operating temperature is 185°F (85°C). A new bearing may run 275°F (135°C) maximum for the initial 15 to 20 hours of operation. If bearings are running hot, inspect at frequent intervals until 20 hours of operation have elapsed. If bearing temperature has not stabilized at this time, replace bearings. Refer to paragraph 6-63 for additional bearing inspection data.

NOTE

A cold cylinder probe may be used to provide a precise measurement of bearing temperature.

l. Apply protective coating to tail rotor drive shaft segments. (Refer to paragraph 6-69)

6-69. APPLICATION OF CORROSION PROTECTIVE COATING.

Note

Corrosion protective coating is to be applied to the aft short tail rotor drive shaft, the long tail rotor drive shaft, and to tail rotor drive shaft segments assemblies after installation.

a. Surface preparation. Thoroughly clean driveshafts receiving coating with a cloth saturated with naphtha (item 36, table 1-1). Wipe surface dry with a clean cloth before the solvent evaporates.

b. Masking preparation. Mask off all bearings, bearing collars, and disc assemblies with masking tape (item 75, table 1-1).

c. Application of coating. Mix 1 part of clear acrylic lacquer (item 94, table 1-1) to 1.5 to 2 parts acrylic lacquer thinner (item 102, table 1-1) and apply as follows:

(1) Spray. Apply a wet spray coat comparatively close to the surface (approximately 6 to 8 inches). After 15 to 30 minutes drying time, apply a second coat in the same manner as the first coat was applied.

(2) Brush. Apply using a fine hair brush (camel or ox hair, not nylon) and paint brush lacquer coating quickly over the surface overlapping the previous strokes, but not reworking the entire coated area. After 30 minutes drying time, apply a second coat in the same manner as the first coat was applied.

d. Curing. Curing of protective coating may be accomplished as follows:

(1) Air dry. After second coat is applied full cure can be obtained in a maximum drying time of 48 hours at ambient room temperature.

(2) Heat dry. After second coat is applied, accelerated curing can be accomplished by air drying for 30 minutes, then heat lamp bake at 150°F (66°C) for 2 hours.

(3) Remove masking tape.

e. Inspection. After curing, the coating shall be smooth and uniform over entire surface with no area of shafting uncoated. Coating shall have a dry film thickness of 0.0012 to 0.0020 inch (1.2 mils to 2.0 mils). Areas found to be uncoated may be repaired in accordance with subparagraph f.

CAUTION

Do not sand through anodized surface during spot repair.

f. Spot repair. Isolated areas of non-adhesion shall be refinished by feathering the isolated areas with No. 400 grit sandpaper (item 90, table 1-1) or finer. Wipe areas with naphtha (item 36, table 1-1) and refinish in accordance with subparagraph c.

g. Apply paint index marks to the five bearing inner race, across bearing collars and onto drive shaft. Also apply index marks from bearing hanger to bearing outer race.

Note

Paint index marks are not required unless desired for helicopters 1252 and subsequent.

h. Apply corrosion preventive compound (item 24, table 1-1) to joints where hanger bearing outer race contacts hanger. Do not allow corrosion preventive compound to contact bearing seals.

6-70. OIL COOLING FAN AND SHAFT ASSEMBLY.

6-71. DESCRIPTION. The cooler fan is mounted on the upper structure, aft of the aft firewall and is driven by the tail rotor drive shaft. The squirrel cage type impeller is mounted on a flanged shaft which is mounted in bearing hangers. The fan shaft connects to the forward and aft short tail rotor drive shafts and is part of the tail rotor drive shaft system. The oil cooling fan provides cooling air for the engine oil system, the transmission oil system and the hydraulic system. The engine oil cooler mounts above the fan while a flexible duct conveys cooling air forward to the transmission oil cooler and the hydraulic reservoir.

6-72. Deleted

6-73. REMOVAL – OIL COOLING FAN AND SHAFT ASSEMBLY INCORPORATING CLAMP TYPE BEARING HANGERS.

a. Remove cowling to gain access to cooling fan. (Refer to **Section VIII.)**

b. Remove forward and aft short tail rotor drive shafts attached to each end of oil cooler shaft (29 figure 6-24) and splined adapters. (Refer to paragraph 6-57)

c. Drain oil tank and remove engine oil cooler, oil fittings, and lines, flexible air duct and other components as required to provide clearance for removal of oil cooling fan and shaft assembly. (Refer to **Section V.)**

d. Remove nuts (18, figure 6-24), washers (17) from four screws attaching fan shaft bearing cover (1), gaskets (2), to firewall (3) and forward bearing hanger (4).

e. Remove two mounting bolts (19), washers (20 and 21) from base of forward bearing hanger (4).

f. Remove two mounting bolts (46), washers (47 and 48) from base of aft bearing hanger (33).

g. Remove four mounting bolts (22), washers (23 and 24) from scroll (25) and remove assembly from deck. Do not remove shims from deck surface; reinstall mounting hardware to retain shim location.

h. Remove oil cooling fan and shaft assembly.

i. Reinstall bolts (19, 22 and 46) to prevent repositioning or loss of shims on deck.

6-74. Deleted

Figure 6-23 deleted

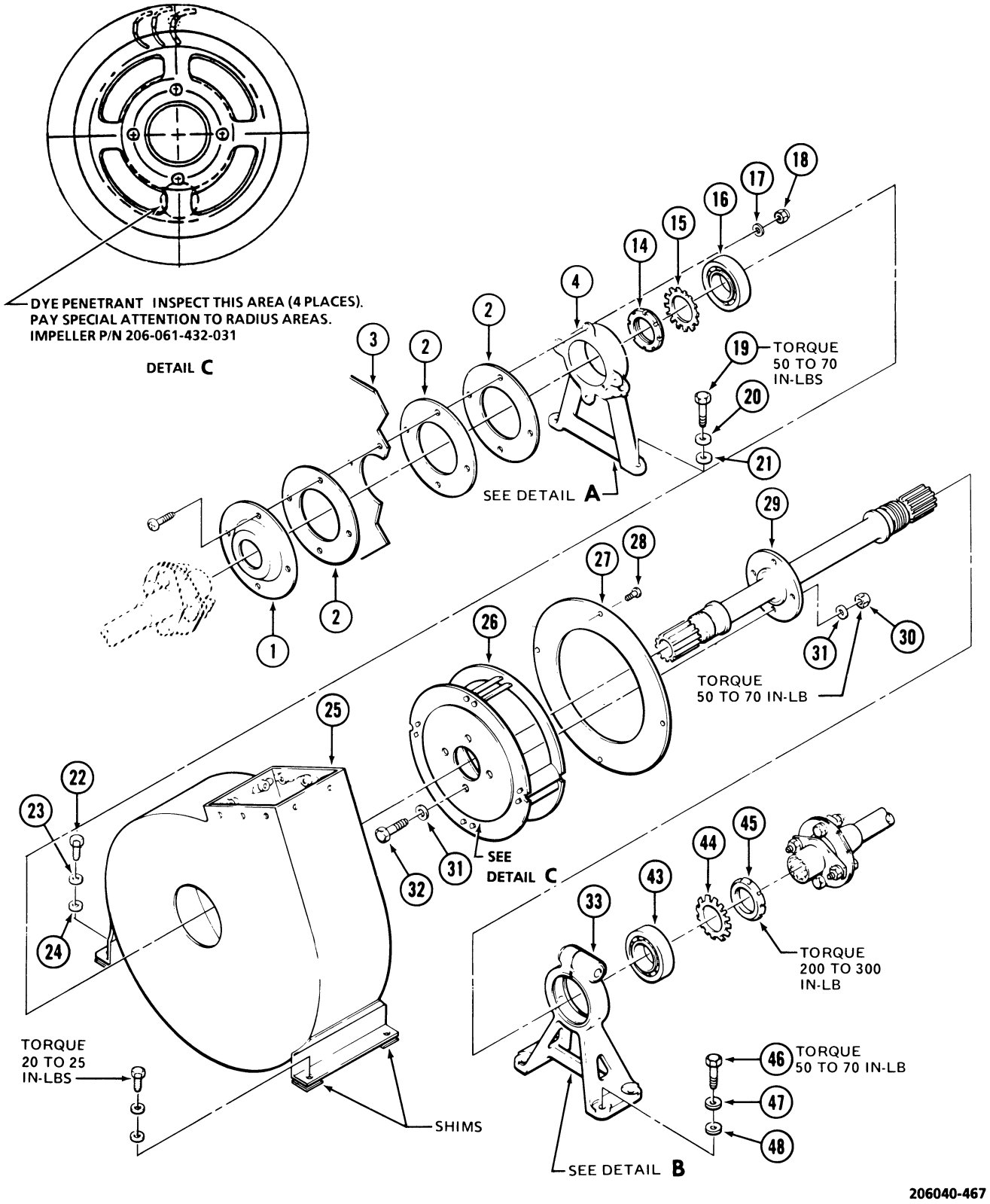

Figure 6-24. Oil Cooling Fan and Shaft Assembly Incorporating Clamp Type Bearing Hangers (Sheet 1 of 3)

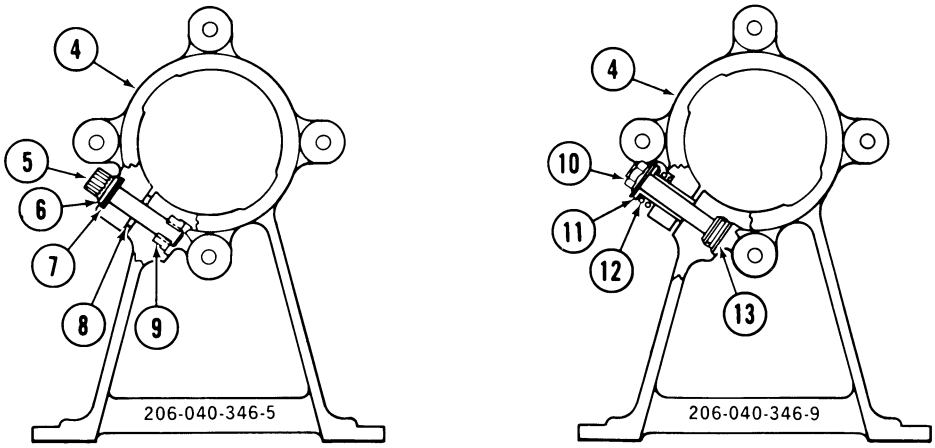

HELICOPTERS 414 THROUGH 913

HELICOPTERS 914 AND SUBSEQUENT

FORWARD BEARING HANGER

DETAIL **A**

NOTE

Hanger configuration assembly for helicopters S/N 1 through 413 is not shown due to mandatory requirement to install 206-040-339-9 bearing, which requires a later hanger configuration.

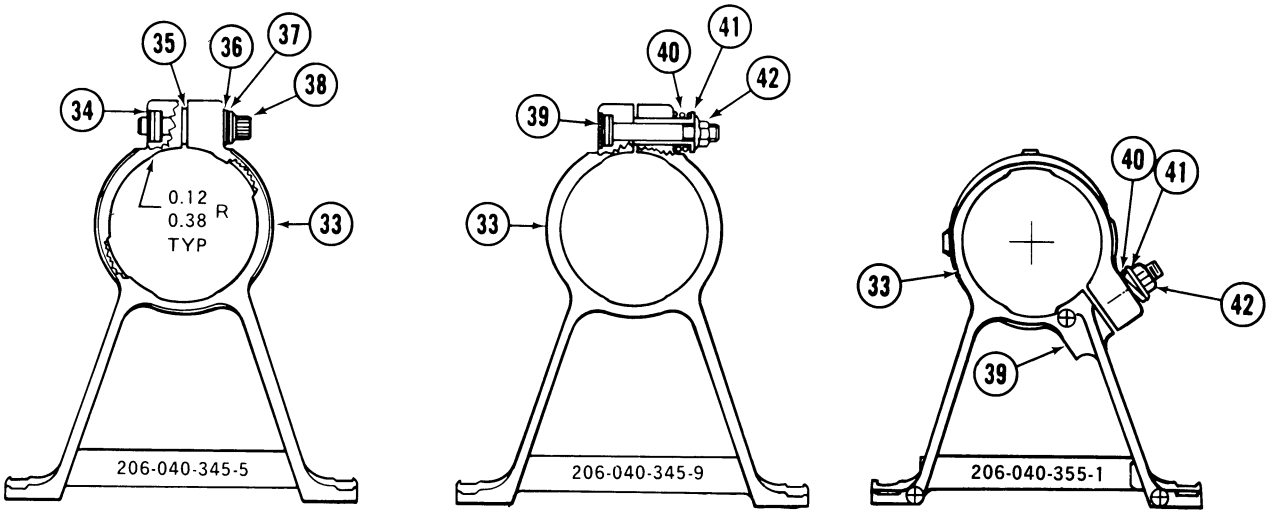

HELICOPTERS 414 THROUGH 913

HELICOPTERS 914 AND SUBSEQUENT

AFT BEARING HANGER

DETAIL **B**

206040-119-2E

Figure 6-24. Oil Cooling Fan and Shaft Assembly Incorporating Clamp Type Bearing Hangers (Sheet 2 of 3)

1. Bearing Cover, Fan Shaft
2. Gasket
3. Aft Firewall
4. Forward Bearing Hanger
5. Bolt
6. Thin Steel Washer
7. Thin Aluminum Washer
8. Shim
9. Nut
10. Nut
11. Spacer
12. Spring
13. Clinch Bolt
14. Bearing Retainer Nut, Fan Shaft
15. Lock Ring
16. Bearing
17. Washer
18. Nut
19. Bolt
20. Thin Steel Washer
21. Aluminum Alloy Washer
22. Bolt
23. Steel Washer
24. Aluminum Alloy Washer
25. Scroll
26. Impeller
27. Impeller Access Plate
28. Screw
29. Shaft, Oil Cooler
30. Nut
31. Thin Steel Washer
32. Bolt
33. Aft Bearing Hanger
34. Nut
35. Shim
36. Thin Steel Washer
37. Thin Aluminum Washer
38. Bolt
39. Bolt
40. Spring
41. Spacer
42. Nut
43. Bearing
44. Lock Ring
45. Bearing Retainer Nut, Fan Shaft
46. Bolt
47. Thin Steel Washer
48. Aluminum Alloy Washer

Figure 6-24. Oil Cooling Fan and Shaft Assembly Incorporating Clamp Type Bearing Hangers (Sheet 3 of 3)

6-75. DISASSEMBLY – OIL COOLING FAN AND SHAFT ASSEMBLY INCORPORATING CLAMP TYPE BEARING HANGERS.

a. Straighten tangs on lock rings (15 and 44, figure 6-24) and remove bearing retaining nuts (14 and 45). Hold oil cooler shaft (29) with T101511 spline wrench, and remove nuts with a 2 inch spanner wrench.

b. Press bearings (16 and 43) with forward and aft bearing hangers (4 and 33) from oil cooler shaft (29) as an assembly.

c. On helicopters with shimmed bearing hangers, remove bolts (5 and 38), washers (6, 7, 36, and 37) and shims (8 and 35) from bearing hangers (4 and 33). Rotate bearings (16 and 43) 90 degrees and align with notches in bearing hangers, then remove bearings. (See figure 6-24 , details A and B.)

d. On helicopters with spring loaded bearing hangers, remove nuts (10 and 42), spacers (11 and 41) and springs (12 and 40) from bearing hangers (4 and 33). Rotate bearings (16 and 43) 90 degrees and align with notches in bearing hangers, then remove bearings. (See figure 6-24 , details A and B.)

e. Remove four screws (28) attaching impeller access plate (27) to scroll (25) and remove access plate.

f. Remove impeller (26) and oil cooler shaft (29) from scroll (25). Remove four mounting bolts (32), washers (31) and nuts (30) attaching impeller (26) to shaft.

6-76. INSPECTION.

a. Inspect bearings for roughness and signs of overheating. Replace as required. (Refer to paragraph 6-63 .)

b. Inspect hangers and shaft for cracks or damage. Apply protective coating as required. (Refer to paragraph 6-69 .)

c. Inspect impeller (26) for cracks, particularly at mounting flange and where individual blades attach as follows:

(1) Thoroughly clean four spoke radius areas on impeller rear mounting plate, using drycleaning solvent (item 12) to remove dirt, grease, and oil residue, then wipe dry. See detail C.

(2) Dye penetrant inspect impeller mounting plate, paying special attention to radius areas around spokes for crack indications. Apply penetrant cleaner, dye, and developer per manufacturer instructions.

(3) Impellers found with crack indications must be removed from service.

(4) If no crack indications are detected, clean inspection materials from impeller.

d. If impeller requires refinishing, clean thoroughly and apply a very thin uniform coat of zinc chromate (item 80).

e. Static balance impeller and oil cooler shaft. (Refer to paragraph 6-77.)

f. For overhaul refer to **Section VI.**, Part 4.

6-77. STATIC BALANCE – FAN SHAFT ASSEMBLY. To preclude high frequency vibration as a result of either installing a new or replacement oil cooler fan shaft and/or a new or replacement fan impeller or any combination thereof, static balance complete assembly prior to installation as follows:

a. Disassemble cooling fan and shaft. (Refer to paragraph 6-74 or 6-75.)

b. On helicopters with clamp type bearing hangers. Position impeller (26, figure 6-24) on shaft (29) from forward end and secure with four bolts (32) and nuts (30) using washers (31) under boltheads and nuts.

c. Mount shaft and impeller on knife edge balancer, inboard of the key-way slots on the bearing journal surface.

d. Utilizing (AN960-416 and AN960-416L) washers balance assembly to within one thin steel (AN960-416L) washer. Longer (AN4-6A) bolts may be required due to additional balance washers. Torque nuts to 50 to 70 inch-pounds.

CAUTION

When changing (AN4-5A) bolt length, ensure not to bottom out nuts on shank of bolt before proper torque is obtained.

e. Completely reassemble cooling fan and shaft assembly. (Refer to paragraph 6-79 and 6-80)

6-78. Deleted

6-79. REASSEMBLY – OIL COOLING AND SHAFT ASSEMBLY INCORPORATING CLAMP TYPE BEARING HANGERS WITH SHIMS.

a. Position impeller (26, figure 6-24) on oil cooler shaft (29) and secure with four bolts (32), washers (31) and nuts (30). Ensure thin steel washers (31) are placed under bolt heads and nuts.

Note

After static balance of impeller and shaft, bolt length and washer quantities may vary. (Refer to paragraph 6-77.)

b. Position impeller and shaft in scroll (25, figure 6-24) and install impeller access plate (27). Secure with four screws (28).

CAUTION

Different dash numbered hanger assemblies look alike and are interchangeable, but are dimensionally different. Installation of mixed assemblies will result in tail rotor driveshaft misalignment, bearing loading problems, and distorted/cracked disc assemblies. Verify the complete part number of the replacement hanger assembly prior to installation.

c. Apply a thin coating of corrosion preventive compound (item 24A, table 1-1) to the inner diameter of forward and aft bearing hangers (4 and 33, figure 6-24) and the outer race of bearings (16 and 43). Do not allow compound to contact bearing seals.

d. Hold bearings (16 and 43) 90 degrees to notches in bearing hangers (4 and 33) and insert bearings halfway through hangers, then rotate bearings into plane of hangers.

e. Perform bearing to bearing hanger fit check as follows:

(1) If bearing hangers have been disassembled install bolts (5 and 38) with thin steel washers (6 and 37) under bolt head, thin aluminum washers (7 and 36), and shim (8 and 35) in forward and aft bearing hangers (4 and 33). Also install a 0.002 inch test shim with existing shim (8 and 35). Torque bolts (5 and 38) to 50 to 70 inch-pounds. (See figure 6-24, detail A.)

Note

Shims used in bearing hanger clamp slots are available in 0.002 inch thickness differences noted by dash number on part. Use proper thickness shim to obtain final proper fit. (Shims are made from 5052 aluminum alloy, Temp H-34, H-36 or H-38 stock.)

(2) With hand pressure check that bearings (16 and 43) do not pivot or have radial looseness in bearing hangers. Slight axial looseness is permitted.

(3) If fit is too loose or too tight, change shim (8 and 35) to provide fit which will meet step 2 requirements.

(4) When bearing fit is acceptable, remove 0.002 inch test shim.

(5) An alternate method of bearing-hanger fit. Torque bolts (5 and 38) to 50 to 70 inch-pounds at 65° to 85°F (18° to 29°C). The torque required to pivot the bearings (16 and 43) in any direction from dead center in the forward and aft bearing hangers (4 and 33) must be within 115 to 155 inch-pounds. If torque is high or low, change shim (8 and 35) to obtain an acceptable fit. (Refer to Note statement following step 1.)

(6) After obtaining proper bearing to hanger fit check for required shims (8 and 35) and torque bolts (6 and 38) to 5 inch-pounds.

f. Press bearings (16 and 43) with forward and aft bearing hangers (4 and 33) into position on oil cooler shaft (29).

Note

When installing bearings on oil cooler shaft, observe that forward bearing hanger firewall mounting flange is to forward end of the oil cooler shaft and for the aft bearing hanger assembly, the side with the longest height dimension is to the forward end of the oil cooler shaft.

g. Position new lockrings (15 and 44) on oil cooler shaft (29) and install nuts (14 and 45). Hold shaft with spline wrench (T101511), and torque nuts (14 and 45) using a 2 inch spanner wrench to 200 to 300 inch-pounds. Lock nuts (14 and 45) by bending tabs of lockrings (15 and 44) into lugs on nuts.

6-80. REASSEMBLY – OIL COOLING FAN AND SHAFT ASSEMBLY INCORPORATING CLAMP TYPE BEARING HANGERS WITH SPRINGS.

a. Position impeller (26, figure 6-24) on oil cooler shaft (29) and secure with four bolts (32), washers (31) and nuts (30). Ensure thin steel washers (31) are placed under bolt heads and nuts.

Note

After static balance of impeller and shaft, bolt length and washers quantities may vary. (Refer to paragraph 6-77.)

b. Position impeller and shaft in scroll (25) and install impeller access plate (27). Secure with four screws (28).

CAUTION

Since different dash numbered hanger assemblies look alike and are interchangeable, there is a dimensional difference in hanger height which will result in tail rotor driveshaft misalignment, bearing loading problems, and distorted/cracked disc assemblies. Verify the complete part number of the replacement hanger assembly prior to installation.

c. Apply a thin coating of corrosion preventive compound (item 24A, table 1-1) to the inner diameter of forward and aft bearing hangers (4 and 33, figure 6-24) and the outer race of bearings (16 and 43). Do not allow compound to contact bearing seals. Also apply a thin coating of compound (item 24, table 1-1) to shank and threads of bolts (13 and 39), springs (12 and 40), and spacers (11 and 41). (See figure 6-24 , details A and B.)

WARNING

Ensure that 206-040-351-3 spacer (11) measuring 0.7050 to 0.7100 inch from flanged end is used on 206-040-346 forward bearing hanger (4) and in 206-040-355 aft bearing hanger (33). On 206-040-345 aft bearing hanger (33) use 206-040-351-5 spacer (41) measuring 0.8200 to 0.8250 inch. Mixing of spacers may result in tail rotor driveshaft failure. (Refer to figure 6-21A)

d. If bearing hanger was disassembled install springs (12 and 40), spacers (11 and 41) and nuts (10 and 42). Do not torque nuts (10 and 42) at this time.

e. Hold bearings (16 and 43) 90 degrees to notches in bearing hangers (4 and 33) and insert bearings halfway through hangers, then rotate bearings into plane of bearing hangers. Torque nuts (10 and 42) to 50 to 70 inch-pounds.

f. Press bearings (16 and 43) with forward and aft bearing hanger (4 and 33) into position on oil cooler shaft (29).

Note

When installing bearings on oil cooler shaft, observe that forward bearing hanger firewall mounting flange is to forward end of the oil cooler shaft, and for the aft bearing hanger assembly, the side with the longest height dimension is to the forward end of the shaft.

g. Position new lockrings (15 and 44) on oil cooler shaft (29) and install nuts (14 and 45). Hold shaft with spline wrench (T101511), and torque nuts (14 and 45) using a 2 inch spanner wrench to 200 to 300 inch-pounds. Lock nuts (14 and 45) by bending tab of lockrings (15 and 44) into lugs on nuts.

6-81. Deleted

6-82. INSTALLATION – COOLING FAN AND SHAFT ASSEMBLY INCORPORATING CLAMP TYPE BEARING HANGERS.

CAUTION

Since different dash numbered hanger assemblies look alike and are interchangeable, there is a dimensional difference in hanger height which will result in tail rotor driveshaft misalignment, bearing loading problems, and distorted/cracked disc assemblies. Verify the complete part number of the replacement hanger assembly prior to installation.

a. Position cooling fan and shaft assembly in place over shims on deck. Install four mounting bolts (22, figure 6-24), with steel washers (23) under bolt heads, and aluminum washers (24) in contact with scroll (25). Torque bolts (22) to 20 to 25 inch-pounds.

b. Position forward bearing hanger (4) over shims on deck. Install two mounting bolts (19), with steel washers (20) under bolt heads, and aluminum washers (21) in contact with bearing hanger.

Figures 6-25 thru 6-27 deleted.

c. Position one gasket (2) on forward side of aft firewall and two gaskets (2) on aft side. Position bearing cover (1) on forward side of firewall (3). Install four screws through cover, gaskets and forward bearing hanger and secure with nuts (18), placing an aluminum alloy washer, (17) under each nut.

Note

A deflection of the aft firewall (3) of 3/32 inch is allowable when securing cover (1), gaskets (2) and forward bearing hanger (4) to the firewall. One of the two gaskets on aft side of firewall can be removed or moved to forward side of the firewall to assist in obtaining allowable deflection limits.

d. Torque forward bearing hanger mount bolts (19) to 50 to 70 inch-pounds.

e. Position aft bearing hanger (33) over shims on deck. Loosely install four mounting bolts (46), with steel washers (47) under bolt heads, and aluminum washers (48) in contact with bearing hanger.

f. Exert downward pressure onto top of aft bearing hanger (33) sufficiently to establish contact between mounting legs of bearing hanger and shims mounted on deck.

Note

If contact between surfaces is not within 0.005 inch tolerance limit, rework surface of shim to obtain acceptable tolerance limits for both legs of hanger.

g. Torque aft bearing hanger mount bolts (46) to 50 to 70 inch-pounds.

h. With firm hand pressure rotate oil cooler shaft (29) to ensure impeller (26) has adequate clearance inside scroll (25).

i. Check alignment of oil cooling fan and shaft assembly as follows:

(1) Align centerline of scroll (25) with helicopter centerline (BL 0.00) within 0.030 inch. Shim underneath fan scroll to attain vertical alignment.

(2) Forward and aft bearing hangers (4 and 33) must align along common axis bores of bearings (16 and 43) within 1 degree angularity.

j. Install splined coupling adapters on each end of shaft. Lubricate splines with a thin film of anti-seize compound (item 42 or 43, **table 1-1**).

k. Install forward and aft short tail rotor drive shafts. (Refer to paragraph 6-64.)

l. Install oil cooler oil lines, air duct and other components removed for access to cooler fan and shaft assembly. (Refer to **Section VII.**)

m. Adjust clamp type bearing hangers that incorporate shims (8, figure 6-24) in accordance with paragraph 6-66.

n. Adjust clamp type bearing hangers that incorporate springs (12, figure 6-24) in accordance with paragraph 6-67 or 6-68.

o. After initial helicopter ground run and bearing hanger adjustment in accordance with subparagraphs l. and m. accomplish the following:

(1) Retorque forward and aft bearing hanger bolts (19 and 46, figure 6-24) to 50 to 70-inch-pounds.

(2) Safety forward bearing hanger (4) mounting bolts (19) to legs of hanger with 0.032 inch lockwire (item 19, table 1-1).

(3) Safety aft bearing hanger (33) mounting bolts (46) in pairs with 0.032 inch lockwire (item 19, **table 1-1**).

p. After final check of bearing hanger mounting bolts, bearing clamp bolts and safety wiring, a thin coating of corrosion preventive compound (item 24, **table 1-1**) shall be applied to the aft side of the forward bearing hanger. The areas to be coated are the edges of the bearing clamping surface and the exposed edges of the bearing outer race. When these areas are coated caution shall be exercised to prevent the compound from contacting the bearing grease seal.

6-83. TAIL ROTOR GEARBOX ASSEMBLY.

6-84. DESCRIPTION. The tail rotor gearbox contains 90 degree spiral bevel gears providing a speed reduction of 2.35 to 1.0. The bevel gear quill assemblies are designed to controlled dimensions to provide interchangeable replacement of shaft assemblies without shimming. The housing is a magnesium casting attached to the fuselage structure with four studs. A breather type filler cap, magnetic drain plug and oil level sight gage are accessible from ground level. (See figures 6-28 and 6-29)

6-85. REMOVAL – TAIL ROTOR GEARBOX (206-040-400-3).

a. Remove fairing to gain access to tail rotor gearbox. (Refer to **Section VIII.**)

a-1. Drain tail rotor gearbox.

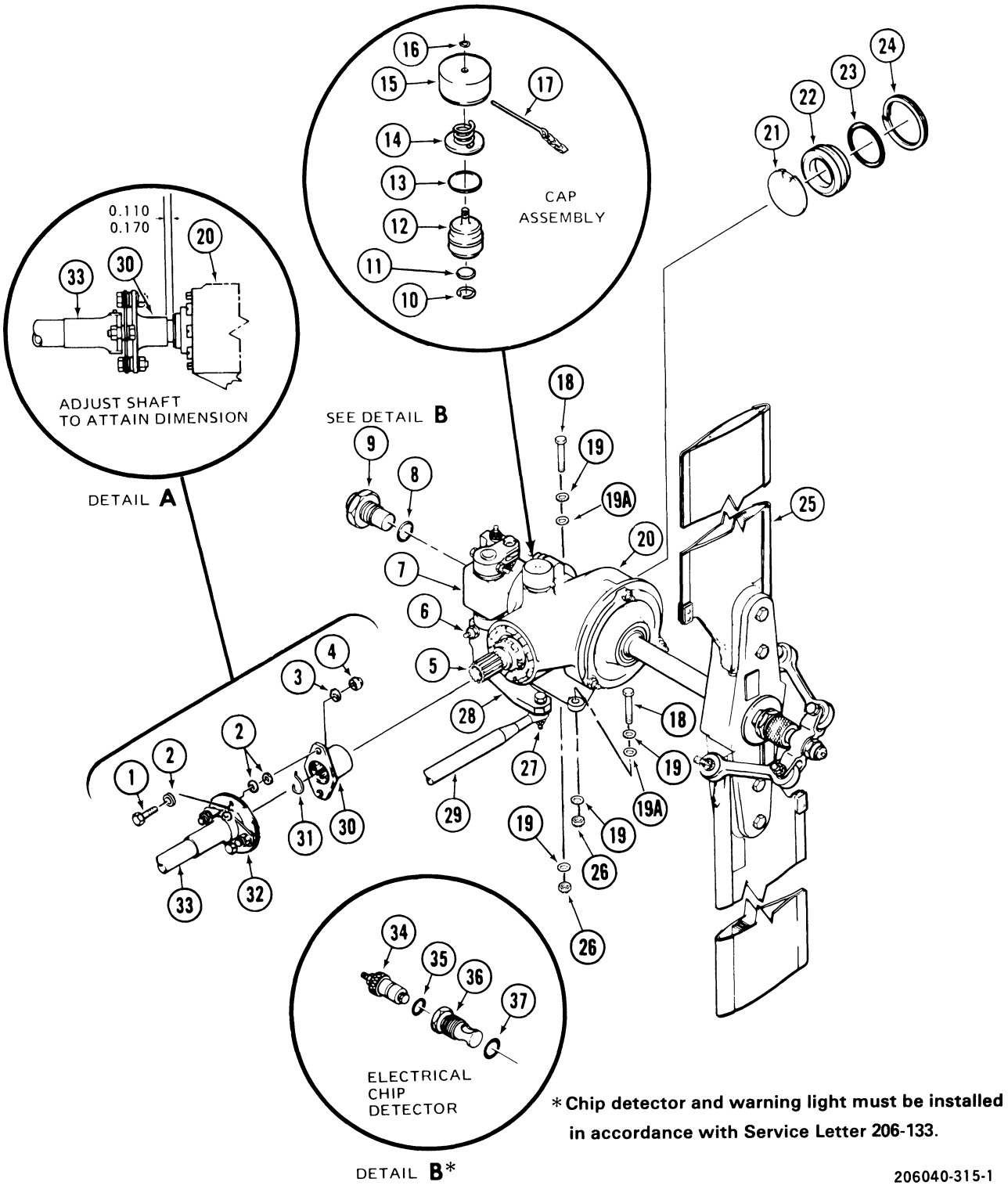

*Chip detector and warning light must be installed in accordance with Service Letter 206-133.

Figure 6-28. Tail Rotor Gearbox (206-040-400-003) (Sheet 1 of 2)

1. Bolt
2. Beveled Washer
3. Steel Washer
4. Nut
5. Input Pinion Shaft
6. Bolt
7. Pitch Change Assembly
8. Packing
9. Drain Plug
10. Retainer Ring
11. Washer
12. Plug
13. Packing
14. Spring Assembly
15. Cap
16. Ring
17. Pin
18. Bolt
19. Washer
19A. Aluminum Washer
20. Tail Rotor Gearbox
21. Indicator
22. Sight Glass
23. Packing
24. Retainer Ring
25. Tail Rotor Hub and Blade Assembly
26. Nut
27. Bolt
28. Bellcrank
29. Control Tube, Pitch Change
30. Input Pinion Adapter
31. Retainer Spring (Optional)
32. Disc Assembly
33. Long Tail Rotor Driveshaft
34. Electric Chip Detector
35. Packing
36. Self-Closing Valve
37. Packing

206040-315-2

Figure 6-28. Tail Rotor Gearbox (206-040-400-003) (Sheet 2 of 2)

b. Remove tail rotor hub and blade assembly (25, figure 6-28 . (Refer to **Section III.**)

c. Remove vertical fin. (Refer to **Section VIII.**)

d. Remove two diametrically opposed bolts (1, figure 6-28), beveled washers (2), thin steel washers (3), and nuts (4) from disc assembly (32) on aft end of long tail rotor drive shaft (33).

e. Remove retainer spring (31), if installed, from input pinion adapter (30) and input pinion shaft (5) and remove adapter.

Note

Retainer spring (31) is optional.

f. Remove bolt (27) connecting pitch change control tube (29) to lower tail rotor bellcrank (28).

g. Remove bolt (6) that secures lower bellcrank (28) to pitch change mechanism (7).

h. Remove nut (26) and washer (19) from mounting stud at aft left corner of tail rotor gearbox (20). Remove three mounting bolts (18), six washers (19), three washers (19A) and three nuts (26).

i. Lift up on tail rotor gear box (20) and disengage lower bellcrank (28). Remove gear box from tailboom with pitch change mechanism attached.

j. Check four spacer washers or angle and two spacer washers on tailboom at gear box mounting point for secure bonding to tailboom. If a washer or washers are loose, retain for bonding. (Refer to paragraph 6-89)

k. Remove and store cap assembly. Install T102103 dehydrator.

NOTE

An appropriate log book entry shall be made upon installation of dehydrator.

6-86. REMOVAL – TAIL ROTOR GEARBOX (206-040-400-5 and Subsequent.)

a. Remove fairing to gain access to tail rotor gear box. (Refer to **Section VIII.**)

a-1. Drain tail rotor gearbox.

b. Remove tail rotor hub and blade assembly (30, figure 6-29). (Refer to **Section III.**)

c. Deleted.

d. Remove two diametrically opposed bolts (3, figure 6-29, beveled washers (4), thin steel washers (7), and nuts (8) from disc assembly (5) on aft end of shaft (1) or segment (2).

e. Remove input pinion adapter (6) from input pinion shaft (9).

f. Remove lower bolt connecting pitch change lever (10) to control rod (11).

g. Remove nuts (33) and steel washers (32) from gearbox mounting studs by reaching through opening in tailboom.

h. Remove tail rotor gearbox (25) from tailboom with pitch change mechanism attached.

i. Check the two spacer washers and aluminum angle on tailboom at gearbox mounting point for secure bonding to tailboom. If a washer or washers are loose, retain for bonding. (Refer to paragraph 6-89.)

j. Remove and store filler cap assembly (14) and install T102103 dehydrator.

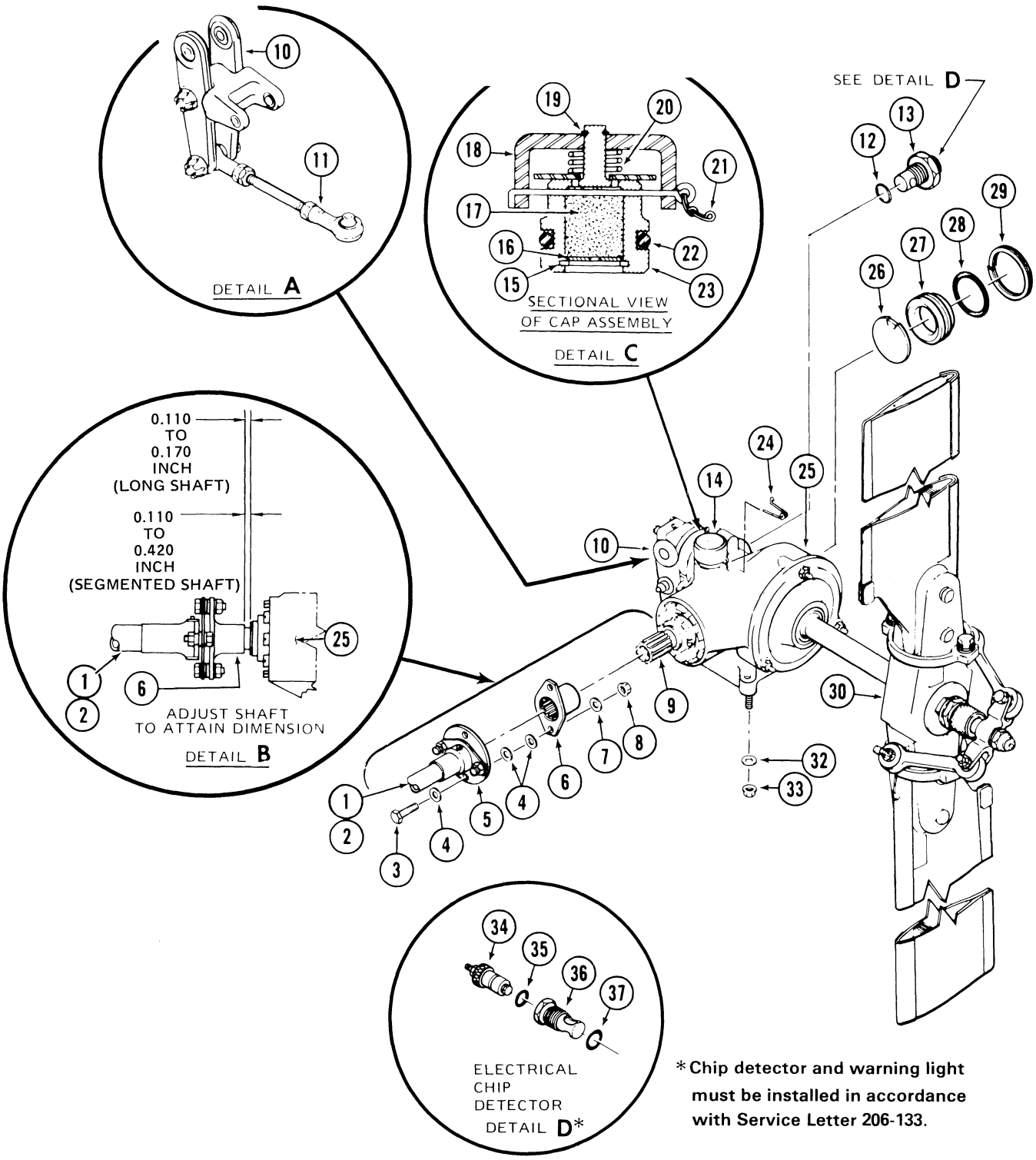

*Chip detector and warning light must be installed in accordance with Service Letter 206-133.

206040-207-1B

Figure 6-29. Tail Rotor Gearbox (206-040-400-5 and Subsequent) (Sheet 1 of 2)

1. Long tail rotor drive shaft (Helicopters 498 through 1251)
2. Aft tail rotor drive shaft segment (helicopters 1252 and subsepuent)
3. Bolt
4. Beveled washer
5. Disc assembly
6. Input pinion adapter
7. Thin steel washer
8. Nut
9. Input pinion shaft
10. Pitch change lever
11. Control rod
12. Packing
13. Drain plug
14. Filler cap assembly
15. Retainer ring
16. Washer
17. Aluminum wool
18. Cap
19. Retainer ring
20. Spring assembly
21. Pin and chain
22. Packing
23. Plug
24. Safety retaining pin
25. Tail rotor gear box
26. Indicator
27. Sight glass
28. Packing
29. Retaining ring
30. Tail rotor hub and blade assembly
31. Deleted
32. Steel washer
33. Nut
34. Electric chip detector
35. Packing
36. Self-closing valve
37. Packing

206040-207-2A

Figure 6-29. Tail Rotor Gearbox (206-040-400-5 and Subsequent) (Sheet 2 of 2)

Note

An appropriate log book entry shall be made upon installation of dehydrator.

6-87. CLEANING.

Clean tail rotor gearbox with cleaning solvent (item 12).

6-88. INSPECTION.

a. Inspect tail rotor gearbox for leaking seals, cracks, security, and metal contamination.

Note

Total static or dynamic input drive quill leakage must not exceed 2 drops per minute. Total gearbox leakage at all sources must not exceed 6 drops per minute.

b. Inspect filler cap assembly for proper locking and security.

c. Inspect tail rotor gearbox oil for evidence of water. When water is present, the oil has a dirty, milky appearance. If this condition is present or suspected, drain, flush and re-service.

d. Inspect sight glass for discoloration. Glass is considered serviceable if oil level can be verified.

e. Inspect tail rotor gearbox output shaft for axial and radial play. Axial play should be negligible. Total radial play not to exceed 0.003 inch when measured 1.0 inches outboard of seal. If axial play is noted, the gearbox should be disassembled to determine the cause.

f. Inspect magnetic drain plug or chip detector for serviceability. (Refer to paragraph 6-16 and 6-18.)

g. For overhaul, refer to Section VI. Part 5.

6-89. BONDING – TAIL ROTOR GEARBOX MOUNTING SPACERS.

a. Check tail rotor gearbox mounting area on tailboom to ensure that:

Note

Helicopters S/N 498 and subsequent do not have washers bonded in place on forward lugs of tailboom.

(1) Two washers are bonded in place where tail rotor gearbox forward lugs rest on surface of forward aluminum angle.

(2) Two washers are bonded in place where tail rotor gearbox aft lugs rest on tailboom.

b. Position gearbox on tailboom and check that gearbox rests evenly on all four points. If any washers are missing, proceed as follows:

(1) Fabricate a plate from sheet metal approximately 0.5 inch thick, the same size as the tail rotor gearbox base,

with a true surface over its entire face. Drill four holes in plate to match gearbox mounting holes.

(2) Clean paint to bare metal to 1.0 inch diameter area around mounting bolt holes where parts are missing or loose. Use sandpaper (item 90) or paint remover (item 61).

(3) Clean area where paint was removed with MEK (item 17) and allow to dry.

(4) Apply double-faced tape around mounting hole(s) on bottom of metal plate to hold washer(s) in position and to keep plate from being bonded to washer(s).

(5) Attach washer(s) in position on plate to match mounting area on tailboom and apply a maximum 0.006 to 0.012 inch thickness film of adhesive (item 31) to exposed surface of washer(s).

(6) Align and position plate on tailboom.

(7) Coat four bolts with petrolatum (item 96), and install to align washers and plate. Do not install nuts on bolts but place a 10 pound weight on plate, and allow adhesive to cure for 24 hours.

(8) Allow adhesive to cure and remove bolts and first plate.

(9) Fabricate a second plate from sheet metal approximately 0.25 inch thick and approximately 2 inches larger than first plate, with a true surface over its entire face. Attach a sheet of No. 320 grit sandpaper (item 90) to surface plate.

(10) Draw sandpaper side of second plate over washer(s) in short smooth strokes until a flat, solid contact is made at all four points.

(11) Position first metal plate on washers to check for plate contact at all four points. Plate must not rock.

(12) Install dissimilar metals tape (item 1) to surface of bonded washers.

Note

The top surfaces of bonded washers with dissimilar metals tape installed must be in the same plane within 0.002 inch and parallel within 0.001 inch across their diameter.

6-90. INSTALLATION — TAIL ROTOR GEARBOX (206-040-400-3).

Note

Remove dehydrator (T102103), if installed. Install filler cap (15, figure 6-28).

a. Position tail rotor gearbox (20, figure 6-28) to bonded spacer washers and angle on tailboom. Secure with three bolts (18), seven washers (19), three washers (19A) and four nuts (26). Torque nuts 50 to 70 inch-pounds.

b. Apply a thin film of anti-seize compound (item 42) to mating splines of input pinion adapter (30) and input pinion shaft (5). Position adapter on shaft.

Note

Retainer spring (31) may be installed if desired; spring is no longer required or used.

c. Connect input pinion adapter (30), disc assembly (32), and long tail rotor drive shaft (33) as follows:

CAUTION

Install beveled washers exactly as described and illustrated with rounded edge side toward disc assembly and flange of input pinion adapter. Failure to comply may result in disc failure.

After a disc assembly has been run on a helicopter, discs should not be changed from original pack except as noted in paragraph 6-63.1.

Note

The grain of each disc runs parallel to the indexing flat edges. When assembling disc pack assembly, it is necessary to alternate indexing flats to obtain alternate grain direction.

(1) Install two diametrically opposed bolts (1) with bolt heads forward and one beveled washer (2) under each bolt head. Position two beveled washers (2) between disc assembly (32) and flange of input pinion adapter (30). Install steel washers (3) on aft side of adapter and secure with nuts (4). Torque nuts (4) 50 to 70 inch-pounds. Inspect all disc assemblies for distortion resulting in gaps

between the individual discs. If any gaps are detected by visual examination, measure gaps with a feeler gage. Use caution and avoid making gaps wider with the feeler gage. Maximum allowable gap is 0.005 inch. If any gaps are found which exceed this limit, loosen bolts, rotate disc back and forth, and uniformly tighten bolts to required torque. Recheck gaps. If gaps still exceed limit, replace disc pack.

(2) Check that 0.110 to 0.170 inch clearance is available between aft end of input pinion adapter (30) and shoulder of input pinion shaft at tail rotor gearbox (20). (See figure 6-28), detail A.) If required, clearance is not available proceed as follows:

(a) Reposition long tail rotor drive (33) forward to obtain the required 0.110 to 0.170 inch clearance. (Refer to paragraph 6-65)

(b) Check that each bearing hanger is centered in hanger brackets within 0.060 inch, after repositioning shaft and obtaining clearance. (See figure 6-21)

d. Install and connect pitch change mechanism by re-installing removed items. (Refer to Section III.)

e. Install tail rotor hub and blade assembly (25, figure 6-28.) (Refer to Section III.)

f. Perform tail rotor gearbox operational check. (Refer to paragraph 6-91A)

g. Reinstall fairing on tail rotor gearbox. (Refer to Section VIII.)

6-91. INSTALLATION — TAIL ROTOR GEARBOX. (206-040-400-5 and Subsequent.)

Note

Remove dehydrator (T102103) and install filler cap (14, figure 6-29), if installed.

a. Position tail rotor gearbox (25 figure 6-29) to bonded spacer washers and angle on tailboom. Secure with steel washers (32) and nuts (33). Torque nuts 50 to 70 inch-pounds.

b. Apply a thin film of anti-seize compound (item 42) to the mating splines of input pinion adapter (6) and input pinion shaft (9). Position adapter on shaft.

c. Connect input pinion adapter (6), disc assembly (5), and long tail rotor drive shaft (1) or aft tail rotor drive shaft segment (2) as follows:

CAUTION

Install beveled washers exactly as described and illustrated with rounded edge side toward disc assembly and flange of input pinion adapter. Failure to comply may result in disc failure.

After a disc assembly has been run on a helicopter, discs should not be changed from original pack except as noted in paragraph 6-63 , step 1.

The grain of each disc runs parallel to the indexing flat edges. When assembling disc pack assembly, it is necessary to alternate indexing flats to obtain alternate grain direction.

(1) Install two diametrically opposed bolts (3) with bolt heads adjacent to disc assembly and one beveled washer (4) under each bolt head. Position two beveled washers (4) between disc assembly (5) and flange of input pinion adapter (6). Install thin steel washers (7) on aft side of adapter and secure with nuts (8). Torque nuts (8) 50 to 70 inch-pounds. Inspect all disc assemblies for distortion resulting in gaps between the individual discs. If any gaps are detected by visual examination, measure gaps with a feeler gage. Use caution and avoid making gaps wider with the feeler gage. Maximum allowable gap is 0.005 inch. If any gaps are found which exceed this limit, loosen bolts, rotate disc back and forth, and uniformly tighten bolts to required torque. Recheck gaps. If gaps still exceed limit, replace disc pack.

(2) Check that clearance is available between aft end of input pinion adapter (6) and shoulder of input pinion shaft (9) as specified in detail B.) If required, clearance is not available proceed as follows:

(a) Helicopters with clamp type hanger bearings incorporating shims. Reposition long tail rotor drive shaft forward for required clearance and centering of bearing hangers in hanger brackets within 0.060 inch. (Refer to paragraph 6-66 and see figure 6-21)

(b) Helicopters with clamp type hanger bearings incorporating springs. Reposition long tail rotor drive shaft forward for required clearance and centering of bearing hangers in hanger brackets within 0.060 inch. (Refer to paragraph 6-67, and see figure 6-21.)

(c) Helicopters with segmented tail rotor drive shafts. Reposition input pinion adapter (6, figure 6-29) by adding or subtracting beveled washers (4) to connecting disc assembly (5). (Refer to paragraph 6-68)

d. Install and connect pitch change mechanism by re-installing removed items. (Refer to **Section III.**)

d-1. Service tail rotor gearbox. (Refer to **Section I.**)

Note

On helicopters with standard landing gear, service to 1/8 inch above oil level indicator line. On helicopters with non-standard landing gear, service to oil level indicator line.

e. Install tail rotor hub and blade assembly (30, figure 6-29). (Refer to **Section III.**)

f. Perform tail rotor gearbox operational check. (Refer to paragraph 6-91A)

g. Reinstall vertical fin and fairing on tail rotor gearbox. (Refer to Section VIII.)

6-91A. TAIL ROTOR GEARBOX OPERATIONAL CHECK.

a. Perform ground run-in cycle for 20 minutes.

b. After shutdown accomplish the following requirements:

(1) Remove and inspect electric chip detector for metal particles. If metal particles are found, investigate to determine cause. Install electric chip detector.

(2) Visually inspect oil at sight gage for contamination.

(3) Inspect tail rotor gearbox for oil leaks.

Part 1
Overhaul — Transmission

Note

Screen records and retire those components which have accumulated maximum operating time or will accumulate maximum operating time before next scheduled overhaul. (Refer to Section I, MANDATORY RETIREMENT SCHEDULE.)

Note

Limits Charts, listing critical dimensions of parts, are provided as a convenience in determining closeness of fit between mating parts. They also provide replacement dimensions as a guide for replacement of worn parts. It is not intended that all dimensions listed on Limits Charts are to be checked out as a prescribed overhaul procedure. Parts that give evidence of wear or physical damage will be checked dimensionally.

Note

For consumable materials item numbers, refer to Section I, CONSUMABLE MATERIALS, table 1-1 .

6-92. TRANSMISSION OVERHAUL.

Note

Remove main transmission assembly. (Refer to paragraphs 6-22 or 6-23.)

6-93. GENERAL – REPAIR OR REPLACEMENT.

a. Replace O-rings, gaskets and seals on reassembly.

b. Dress splines and gears with fine India stone if small nicks, burrs or scratches are visible.

c. Use (NAS1197) aluminum alloy washers under bolt heads and nuts, next to magnesium case surfaces.

d. Duplex bearings, marked with serial numbers, must be installed in matched pairs. Both bearings of matched pair must be from same manufacturer.

e. Triplex bearings must be installed as a matched set from same manufacturer, and bearings in set must be marked with same serial numbers. The "V" mark on outside of outer races must match up. Line up burr marks or other suitable marks, as required, on inner races and face bearings as directed in text and illustrations.

f. Replace all unserviceable parts.

g. Replace loose or damaged studs. When necessary, use oversize studs (provided in 0.003 inch increments) to obtain proper driving torque according to table below. Set replacement studs with unreduced zinc chromate primer (item 80, table 1-1). (Refer to 206A/206B Illustrated Parts Breakdown Manual for stud sizes and part number.)

Torque for Setting Studs

Stud Size	Inch-Pounds Torque
1/4	50 to 95
5/16	100 to 225
3/8	175 to 375

h. Limits Charts, listing critical dimensions of parts, are provided as a convenience in determining closeness of fit

between mating parts. They also provide replacement dimensions as a guide for replacement of worn parts. It is not intended that all dimensions listed on Limits Charts are to be checked out as a prescribed overhaul procedure. Parts that give evidence of wear or physical damage will be checked dimensionally.

i. Refer to Section I SPECIAL INSPECTION — ACCEPTANCE STANDARDS, for Magnetic Particle or Fluorescent Penetrant Inspection Criteria.

6-94. CORROSION DAMAGE LIMITS — TRANSMISSION CASES.

a. Replace cases, support or cap if bearing liners are loose or if threads or inserts are structurally damaged and impractical to repair.

Note

All areas not specifically detailed in figure 6-30 shall have damage blended out to a maximum depth of 0.010 inch.

c. Areas of transmission assemblies most frequently damaged by corrosion are shown in figure 6-30 Acceptable limits of depth of pitting and percentage of area pitting (i.e., the percentage of area in which the original machined surface has been removed by corrosion) are as follows:

b. Replace magnesium or aluminum parts that have corrosion damage in critical areas which would affect the function or structural integrity of the part or if damage exceeds the limits for areas designated on figure 6-30

c. Areas of transmission assemblies most frequently damaged by corrosion are shown in figure 6-30 Acceptable limits of depth of pitting and percentage of area pitting (i.e., the percentage of area in which the original machined surface has been removed by corrosion) are as follows:

(1) Top Case. In areas (A thru D, figure 6-30) maximum depth of pitting is 0.020 inch and no more than 40 percent of area of any 1.0 inch square nor 20 percent of total area of any surface of diameter should be pitted. Areas A & B should be inspected carefully prior to any corrosion removal for evidence of corrosion in threads between studs and case. Any corrosion in threads of case is cause for rejection of part. Inside bolt holes, thru surface C, maximum depth of pitting is 0.020 inch and no more than 20 percent of area of wall of hole shall be pitted.

(2) Main Case. In area (E, figure 6-30) corrosion pitting is acceptable to a maximum depth 0.040 inch, provided no more than 40 percent of the area within any 1.0 inch square, nor no more than 20 percent of the total area of any surface or diameter is pitted. Corrosion damage to threads of studs in area (E) is acceptable provided it does not extend beyond the first thread and main case studs are reworked in accordance with paragraph 6-95D. In areas (F through I) maximum depth of pitting is 0.030 inch. No more than 40 percent of area in any 1.0 inch square nor 20 percent of total area of any surface or diameter should be pitted. Case should be carefully inspected prior to any corrosion removal for evidence of corrosion in threads between studs and case or between the bearing liners and case. Any evidence of corrosion in either of these areas is cause for rejection of part.

(3) Housing, Input Seal. In areas (K, L, and M, figure 6-30 maximum depth of pitting is 0.030 inch and no more than 40 percent of area within any 1.0 inch square nor 20 percent of total area of any diameter or surface.

(4) Support. In area J (figure 6-30) maximum depth of pitting is 0.030 inch or no more than 40 percent of total area within any 1.0 inch square nor more than 20 percent of total area of any surface or diameter should be pitted.

6-95. CORROSION REMOVAL AND REPAIR — TRANSMISSION CASES.

Note

Removal of corrosion products is mandatory prior to subsequent repair or corrosion protective treatment. This procedure is recommended for all magnesium and aluminum corrosion removal and repairs.

a. Rework or repair magnesium parts as follows:

(1) Remove corrosion in areas (E thru L, figure 6-30 or on the walls of bolt holes by immersion in hot chromic acid bath. Refer to table 6-3 and paragraph 1-47B.

Note

Corrosion removal by mechanical means is not authorized.

(2) Remove corrosion pitting in area (M, figure 6-30) contacted by washer, by matching pitted surface. Minimum dimension after repair at point "Y" is 0.287 inch. (See figure 6-30)

(3) Remove corrosion in area (M, figure 6-30) not contacted by washer, by immersion in hot chromic acid bath. Refer to table 6-3 and paragraph 1-47B.

Note

Magnesium parts repaired should not have any sharp edges which may damage packings on reassembly.

(4) Touch-up treat all repaired areas.

b. Touch-up treatment of magnesium parts. The use of the touch-up treatment shall be restricted to parts and assemblies that have small areas of the dichromate coating removed by scratches, abrasion or minor rework. Parts and assemblies that require touch-up shall be treated as follows:

(1) Remove oil and grease with a safety solvent (item 84, table 1-1) or MEK (item 17, table 1-1).

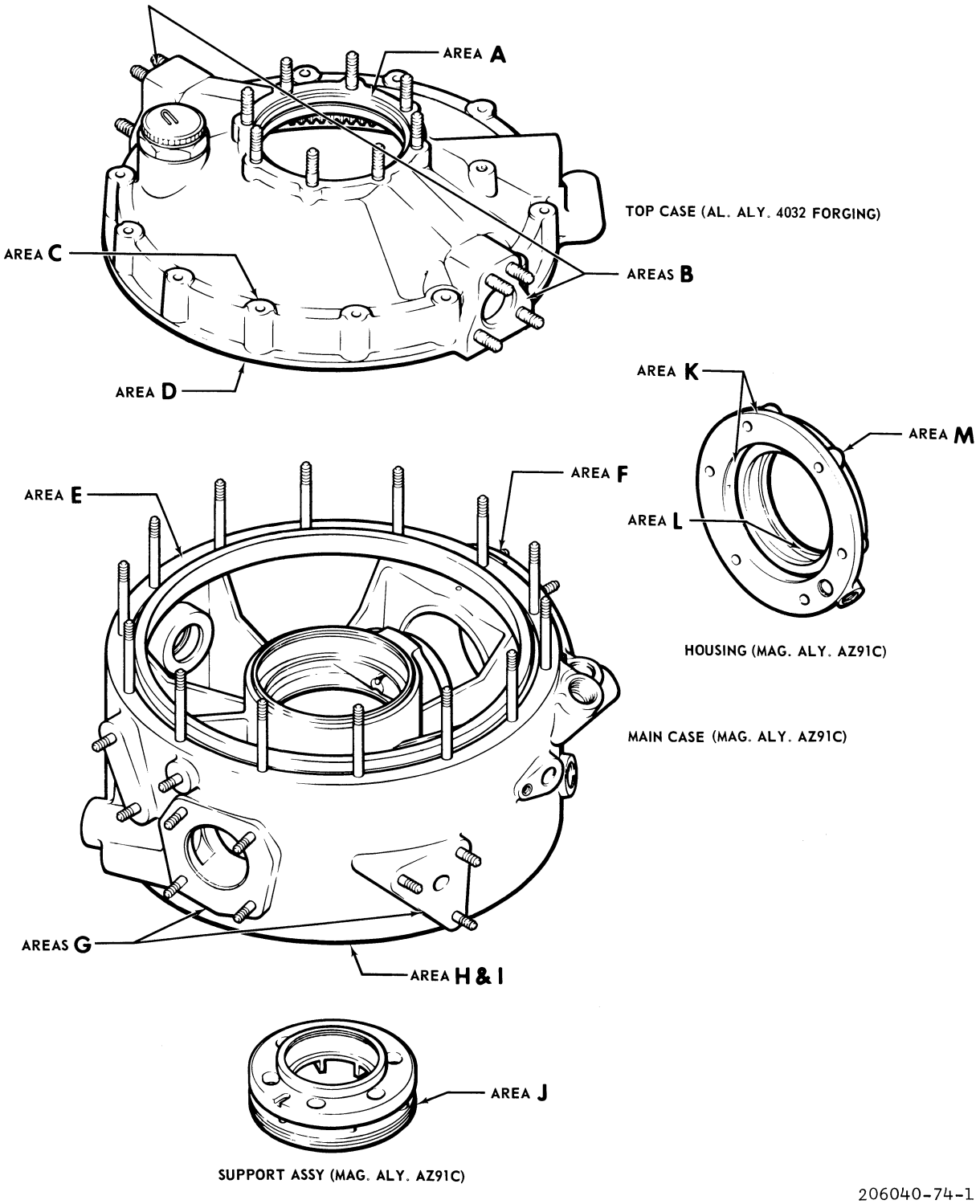

Figure 6-30. Transmission Case – Corrosion Damage Limits (Sheet 1 of 2)

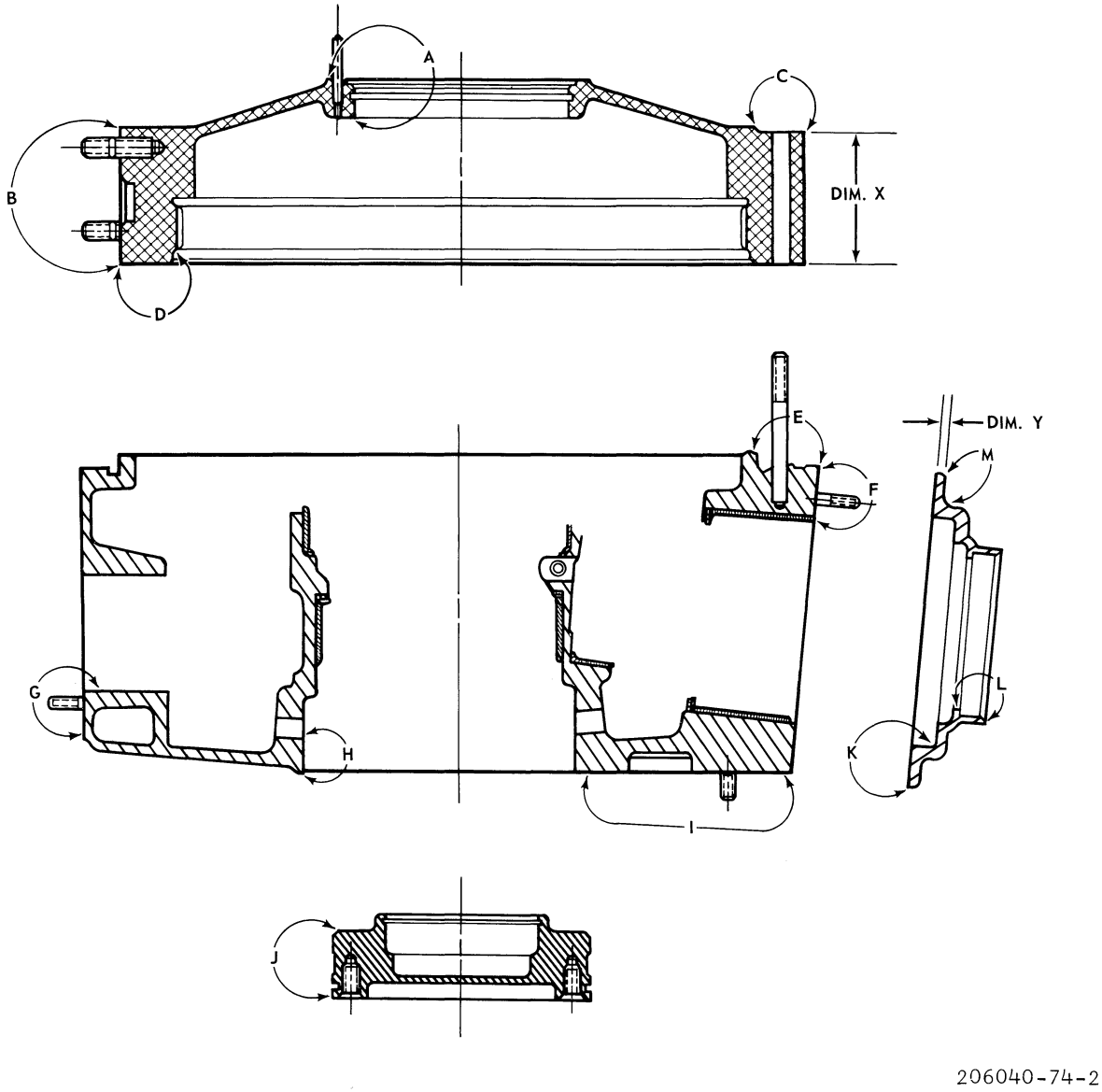

Figure 6-30. Transmission Case — Corrosion Damage Limits (Sheet 2 of 2)

(2) Masking is not required; however it shall be used as required to prevent touch-up solution from running into areas where it is not needed.

(3) Scrub the area to be treated with a Scotchbrite pad (item 9, **table 1-1**) or fine aluminum wool (item 91, **table 1-1**). Abrade to clean bare metal. Fresh machined surfaces may be treated without abrading.

(4) Flush area(s) with cleaning compound (item 106, **table 1-1**) mixed 4 ounces per gallon of water, when necessary, to ensure a water-break free surface.

(5) Rinse with clean water and repeat steps 3 and 4, as necessary, to provide a clean surface.

(6) Mix a solution of chromic acid (item 81, table 1-1) and calcium sulfate (item 107, **table 1-1**) in accordance with table 6-3 . Apply touch-up solution with a brush or swab to repaired areas. Allow solution to react for at least 1 minute, reapply solution as necessary to keep the area wet. Excess solution should be clearly marked, dated, and stored at room temperature in a glass jar. Do not store touch-up solution where temperatures may vary to extremes, or in contact with direct sunlight. Do not use a touch-up solution older than 3 months from date of mixing.

(7) Rinse thoroughly to remove excess solution. The treatment shall produce a brassy colored film. Repeat application of the touch-up solution until a brassy colored film is obtained. Rinse, demask and re-rinse to ensure solution

removal. All rinsing shall be accomplished using room temperature water.

(8) Dry with clean compressed air and/or dry cloths.

(9) Parts that require painting as the next operation shall be painted as soon as practicable after drying, preferably within 24 hours. (Refer to table 6-5.) Bare steel inserts shall be oiled immediately after drying to prevent corrosion.

c. Rework or repair aluminum top case as follows: (See figure 6-30).

(1) Remove corrosion in areas (A, B and D figure 6-22 or on the walls of bolt holes using Scotchbrite (item 9, table 1-1) or fine aluminum wool (item 91, table 1-1).

(2) Brush with a 30 percent solution Turco-WO No. 1 (item 33, table 1-1), or similar alcoholic-phosphoric solution.

Table 6-3. Touch-up Solution for Magnesium (Dow #19)

Materials	Volume per 1 Gallon of Water
Chromic Acid (Item 81, table 1-1)	1-1/3 ounce or 10 grams
Calcium Sulfate (Item 107, table 1-1)	1 ounce or 7.5 grams
Note Calcium sulfate will not dissolve 100%.	
10% Chromic Acid Solution	
Chromium Trioxide, Technical (Chromic Acid) O-C-303b Type II	13-14 ounces/ gallon of water
Hot Chromic Acid Solution	
Chromium Trioxide Technical (Chromic Acid) O-C-303b Type II	20-24 ounces of Chromic Acid in gallon of water heated to 200°F (93°C).

(3) Apply alodine chemical film treatment (item 6 or 32, table 1-1), to repaired areas.

(4) Remove corrosion pitting in area C contacted by washer by machining pitting surface. Minimum dimension, after repair, at point "X" is 1.630 inch.

(5) Remove corrosion pitting in area C not contacted by washer, using scotch-brite (item 9, table 1-1) or fine aluminum wool) followed with application of 30 percent solution of Turco-WO No. 1 (item 33, table 1-1) or similar alcoholic-phosphoric solution. Apply alodine chemical film treatment (item 6 or 32, table 1-1) to repair areas.

d. Rework or repair corrosion damage to threads for studs in area (figure 6-30) as follows:

(1) Remove stud and inspect threaded hole for damage. If damage does not extend past the first thread, main case may be repaired. If damage extends beyond first thread, replace main case.

(2) Drill out threaded hole to 0.265 inch diameter to a depth of one thread.

(3) Apply chromic acid brush on treatment to reworked area. Touch-up solution for magnesium is contained in table 6-3 and is refered to as Dow No. 19 treatment. Apply solution in accordance with paragraph 6-95b.

(4) Install new stud. (Refer to paragraph 6-93g.)

(5) Fill recess around stud with sealant (item 115, table 1-1) to a level flush with main case flange.

6-96. CORROSION PREVENTION TREATMENT TRANSMISSION CASES. After parts are cleaned, control and precautionary measures must be exercised at all times to prevent corrosion. Fingerprint residue, reactive with moisture in the air, will cause accelerated corrosion in the affected areas. In order to avoid these difficulties, the following procedures shall be applied to ferrous metal parts after cleaning and inspection.

a. Wash all ferrous parts in a clean rinse of dry cleaning solvent (item 12, table 1-1) then drain the parts.

b. Gently agitate parts in fingerprint removal corrosion-preventive compound (item 89, table 1-1) and allow to drain.

Note

Normally, parts treated with the above compounds may be left covered in indoor storage for approximately 150 hours without being affected.

c. Immediately prior to reassembly, clean parts with dry cleaning solvent (item 12, table 1-1) and coat with turbine oil (item 20, table 1-1). Do not handle or assemble un-oiled parts.

6-97. TRANSMISSION EXTERNAL COMPONENTS.

6-98. REMOVAL – TRANSMISSION (206-040-002-5 AND -15) COMPONENTS.

a. Remove drain plug (33, figure 6-31), O-ring (34), and drain oil from transmission.

Note

A hose with a special fitting may be used to drain the transmission. Remove the magnetic drain plug from the selfclosing magnetic drain plug assembly. (Refer to table 6-2)

b. Disconnect oil line (7) from filter head (20) and oil cooler (1).

c. Remove bolts (6) attaching oil transfer tube (4) and remove transfer tube and O-rings (2), and gaskets (3).

d. Remove oil cooler (1) as follows:

(1) Disconnect air duct from oil cooler.

(2) Remove bolts attaching bottom of oil cooler to mounting clip (8) and mounting bracket (9).

(3) Lift oil cooler from top of transmission.

(4) Remove mounting bracket (9) and clip (8) from top of top case.

e. Remove oil filter assembly (19) and oil filter head (20) as follows:

(1) Remove clamp (27) and remove disposable filter from filter head (20). Discard disposable filter.

(2) Remove three attaching stud nuts (25) securing oil filter head (20) to transmission case. Tap filter head gently with a soft mallet to loosen filter head and remove from transmission. Discard gasket (24).

f. Disassemble oil filter head.

(1) Cut lockwire.

(2) Remove temperature bulb (21).

(3) Remove thermoswitch (22).

(4) Remove bypass valve (23).

g. If transmission was removed with tachometer generator and hydraulic pump installed, remove generator from mounting pad on hydraulic pump. Remove hydraulic pump from mounting pad on oil pump. (Refer to Section V.)

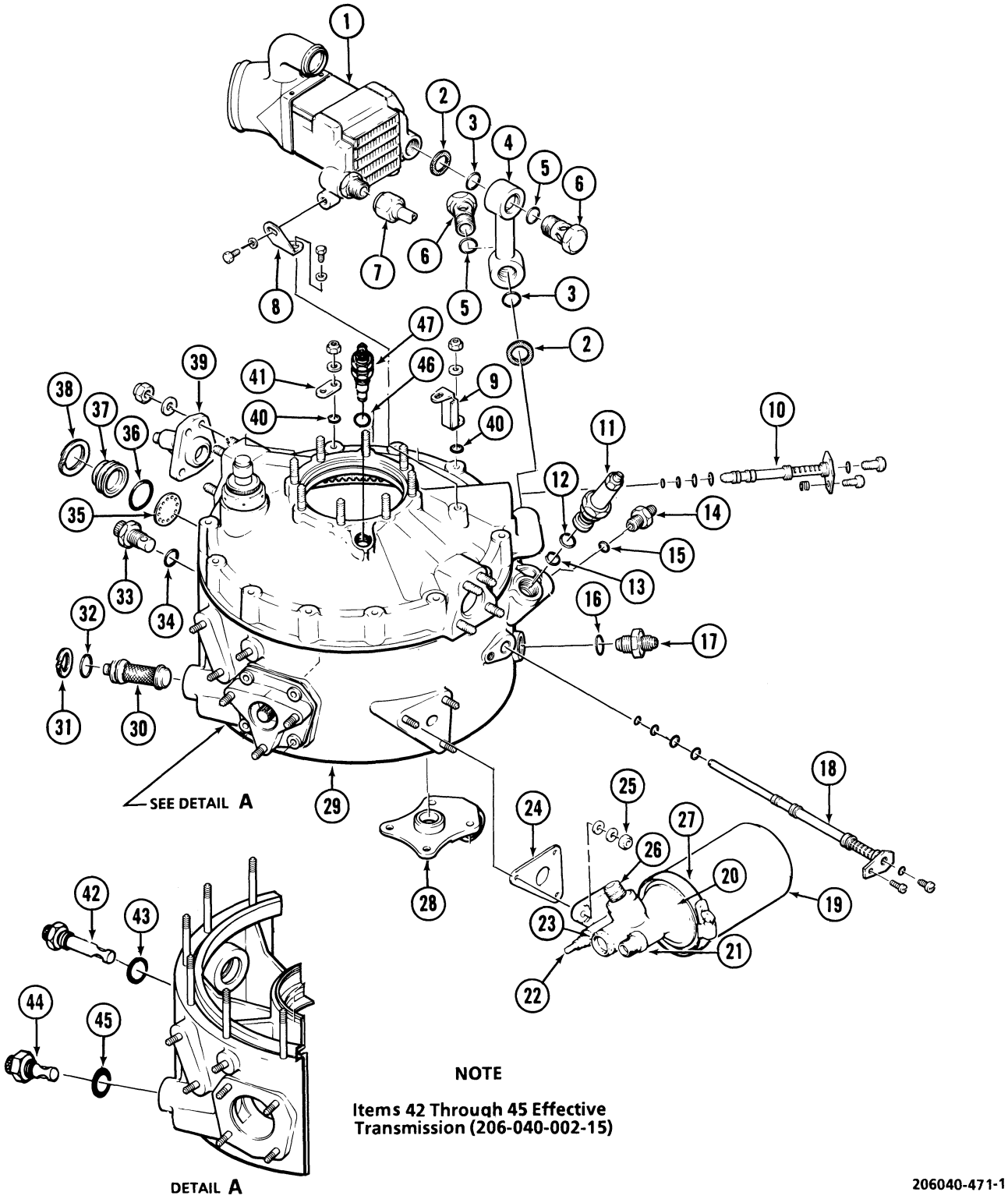

Figure 6-31. Transmission (206-040-002-5 and -15) — External Components (Sheet 1 of 2)

1. Oil Cooler
2. O-Ring
3. Gasket
4. Oil Transfer Tube
5. O-Ring
6. Bolt, Oil Transfer Tube
7. Oil Line, Filler to Oil Cooler
8. Clips, Oil Cooler Mounting
9. Bracket, Oil Cooler Mounting
10. Oil Jet No. 2
11. Valve, Oil Pressure Regulating
12. O-Ring
13. O-Ring
14. Reducer/Filter, Pressure Oil Line to Freewheeling Unit
15. O-Ring
16. O-Ring
17. Union, Return Oil Line from Freewheeling Unit
18. Oil Jet No. 1
19. Oil Filter Assembly
20. Oil Filter Head
21. Temperature Bulb
22. Thermoswitch
23. Oil By-Pass Valve
24. Gasket
25. Nut
26. Union, Filter to Cooler Oil Line
27. Clamp Assembly
28. Drag Pin Assembly
29. Transmission Assembly
30. Strainer Assembly
31. Retainer Ring
32. O-Ring
33. Drain Plug
34. O-Ring
35. Oil Level Indicator
36. O-Ring
37. Glass
38. Retainer Ring
39. Spindle, Upper Pylon Support
40. Stat-O-Seal
41. Adapter
42. Magnetic Drain Plug (B-3181)
43. O-Ring
44. Magnetic Drain Plug (B-3659)
45. O-Ring
46. O-Ring
47. Plug (MS9015-07)

206040-471-2

Figure 6-31. Transmission (206-040-002-5 and -15) — External Components (Sheet 2 of 2)

h. Remove reducer/filter (14), union (17), and O-rings (15 and 16).

i. Remove oil pressure regulating valve (11), and O-rings (12 and 13).

j. Oil level indicator removal: Remove retainer ring (38) and remove sight glass (37) with O-ring (36). Remove oil level indicator (35). Pry the glass out, using caution not to break glass. If glass will not come out without incurring damage, postpone removal until complete transmission disassembly when sight glass and oil level indicator may be pushed out by pushing against back side of indicator.

6-99. REMOVAL – TRANSMISSION (206-040-002-13 AND -25) EXTERNAL COMPONENTS.

a. Remove magnetic drain plugs (35 and 41, figure 6-32) or electric chip detectors (36 or 42) and drain valve (29). Drain oil from transmission and filter head (26).

Note

A hose with a special fitting may be used to drain the transmission. Remove the magnetic drain plug from the self closing magnetic drain plug assembly. (Refer to table 6-2.)

b. Disconnect oil line (7, figure 6-32) from union (24) on oil filter head (26) and oil cooler (1).

c. Remove bolts (6) attaching oil transfer tube (4) and remove transfer tube and O-rings (2) and gaskets (3).

d. Remove oil cooler (1) as follows:

(1) Disconnect air duct from cooler.

(2) Remove bolts attaching bottom of oil cooler (1) to mounting clip (8) and mounting bracket (12).

(3) Lift oil cooler from top of transmission.

(4) Remove mounting clip (8) and mounting bracket (12) from top of top case.

e. Remove oil filter housing (25) and filter head (26) as follows:

(1) Remove two nuts and four washers securing filter housing (25) to filter head (26). Discard filter element and O-rings.

(2) Remove three attaching stud nuts (23) securing oil filter head (26) to transmission case. Tap filter head gently with a soft mallet to loosen filter head. Remove filter head from transmission, and discard gasket (22).

f. Disassemble oil filter head (26) as follows:

(1) Cut and remove lockwire

(2) Remove temperature bulb (28).

(3) Remove thermoswitch (31).

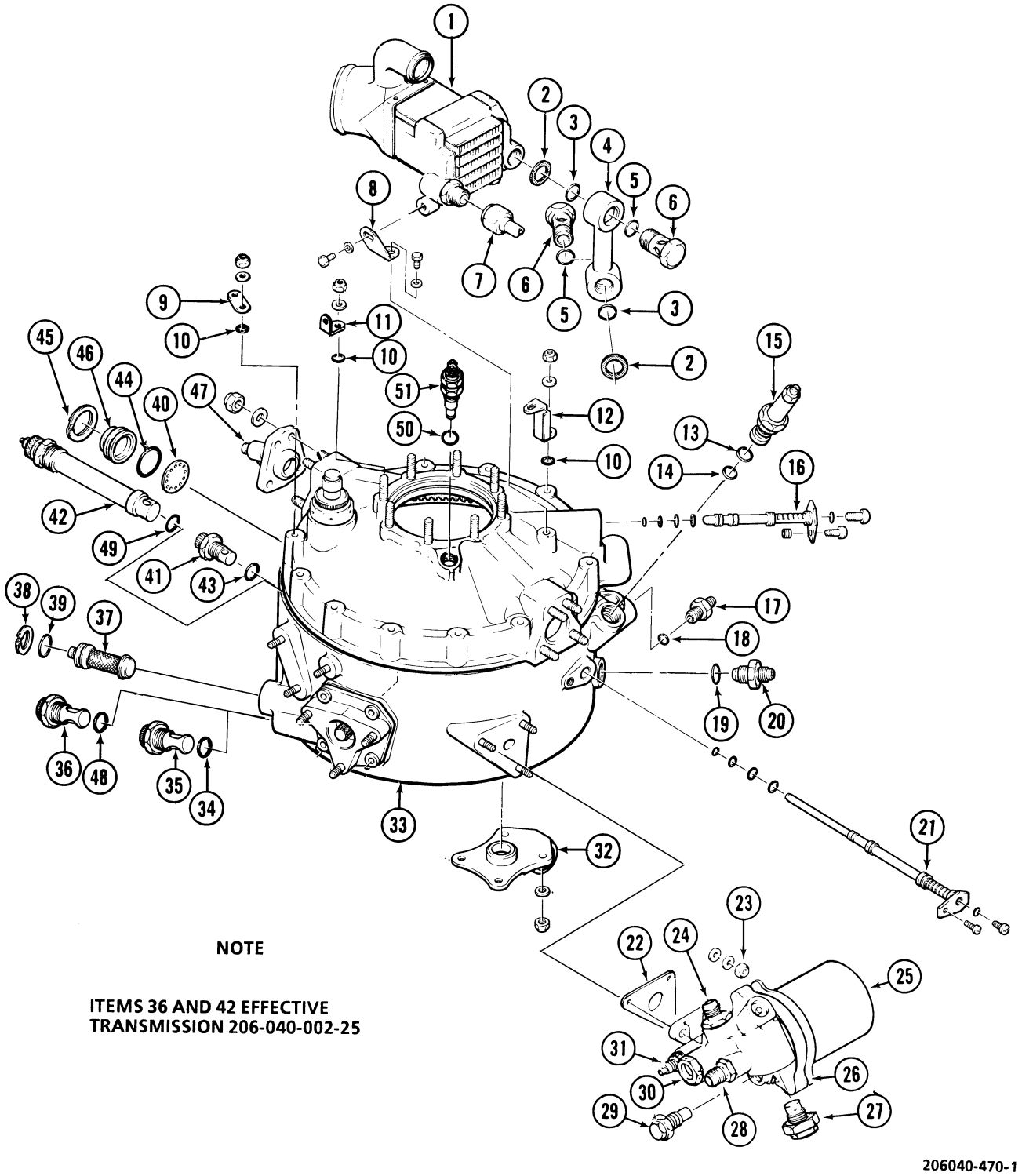

Figure 6-32. Transmission (206-040-002-13 and -25) — External Components (Sheet 1 of 2)

1. Oil Cooler
2. O-Ring
3. Gasket
4. Oil Transfer Tube
5. O-Ring
6. Bolt
7. Oil Line, Filter to Cooler
8. Clip, Oil Cooler Mounting
9. Adapter
10. Stat-O-Seal
11. Bracket
12. Bracket
13. O-Ring
14. O-Ring
15. Valve, Oil Pressure Regulating
16. Oil Jet No. 2
17. Reducer/Filter, Pressure Oil Line to Freewheeling Unit
18. O-Ring
19. O-Ring
20. Union, Return Oil Line from Freewheeling Unit
21. Oil Jet No. 1
22. Gasket
23. Nut
24. Union, Filter to Oil Cooler Oil Line
25. Oil Filter Housing
26. Oil Filter Head
27. Oil Monitor
28. Temperature Bulb
29. Drain Valve
30. Oil By-Pass Valve
31. Thermoswitch
32. Drag Pin Assembly
33. Transmission
34. O-Ring
35. Magnetic Drain Plug (B-3659)
36. Electric Chip Detector (B-3188B)
37. Strainer Assembly
38. Retainer Ring
39. O-Ring
40. Oil Level Indicator
41. Magnetic Drain Plug (B-3181)
42. Electric Chip Detector (B-3182B)
43. O-Ring
44. O-Ring
45. Retainer Ring
46. Sight Glass
47. Spindle, Upper Pylon Support
48. O-Ring
49. O-Ring
50. O-Ring
51. Plug (MS9015-07)

206040-470-2

Figure 6-32. Transmission (206-040-002-13 and -25) — External Components (Sheet 2 of 2)

(4) Remove oil by-pass valve (30).

(5) Remove oil monitor (27) and remaining part of drain valve (29).

g. If transmission was removed with tachometer generator and hydraulic pump installed, remove generator mounting pad on hydraulic pump. Remove hydraulic pump from mounting pad on oil pump. (Refer to **Section V.**)

h. Remove reducer (17), union (20), and O-rings (18 and 19).

i. Remove oil pressure regulating valve (15) and O-rings (13 and 14).

j. Remove oil level indicator as follows:

(1) Remove retainer ring (45) and remove sight glass (46) with O-ring (44).

(2) Remove oil level indicator (40).

Note

Use caution when prying sight glass (46) out. Do not break the glass. If sight glass will not come out without incurring damage, postpone removal until complete transmission disassembly is accomplished. At this time sight glass and oil level indicator may be pushed out by pushing against back side of indicator.

6-100. CLEANING. Clean all transmission external components in cleaning solvent (item 12, **table 1-1**). Dry with filtered compressed air.

6-101. INSPECTION – TRANSMISSION (206-040-002-5 AND -15) EXTERNAL COMPONENTS.

a. Visually inspect all parts for evidence of physical damage and excessive wear. Inspect oil fittings, oil pressure regulating valve (11, figure 6-31), reducer/filter (14), O-ring (15) and drain plug (33) for physical damage and for condition of threads. Replace all unserviceable parts.

b. Oil transfer tube (4) and bolts (6): Check the oil transfer tube (4) for cracks, nicks and burrs. Remove shallow nicks and burrs with a fine India stone (item 95, **table 1-1**). Refinish with zinc chromate primer (item 80, **table 1-1**). Check bolts (6) for serviceable condition and threads. Replace all unserviceable parts.

c. Oil Cooler (1):

(1) Clean exterior with cleaning solvent (item 12, table 1-1). Dry exterior with filtered compressed air. Clean foreign matter from front of cooler coil.

(2) Visually inspect oil cooler (1) for evidence of leaks and to assure good physical condition. Check input and output ports for serviceable threads. Return a damaged, unserviceable cooler to manufacturer for repairs.

d. Oil Line (7): Visually check oil line (15) tubing and flare fittings. Tubing must be free of deep scratches, deep dents and sharp bends. Flare type fittings must be in good condition with clean, serviceable threads. Replace unserviceable oil line.

e. Oil Filter Head (20):

(1) Ensure that all passages and openings in filter head are open and thoroughly clean.

(2) Visually inspect all parts for physical damage and wear.

(3) Inspect filter head using fluorescent method. (Refer to **Section I,** SPECIAL INSPECTION – ACCEPTANCE STANDARDS.)

(4) Replace all unserviceable parts.

f. For reinstallation of transmission external components refer to paragraph 6-163.

6-102. INSPECTION – TRANSMISSION (206-040-002-13 AND -25) EXTERNAL COMPONENTS.

a. Visually inspect all parts for evidence of physical damage and excessive wear. Inspect oil fittings, oil pressure regulating valve (15, figure 6-32), reducer/filter (17), O-ring (18) and plugs (35, 36, 41 or 42) for physical damage and for condition of threads. Replace all unserviceable parts.

b. Oil transfer tube (4) and bolts (6): Check the oil transfer tube (4) for cracks, nicks and burrs. Remove shallow nicks and burrs with a fine India stone (item 95, **table 1-1**). Refinish with zinc chromate (item 80, **table 1-1**). Check bolts (6) for condition and serviceable threads. Replace all unserviceable parts.

c. Oil Cooler (1):

(1) Clean exterior with cleaning solvent (item 12, **table 1-1**). Dry exterior with filtered compressed air. Clean foreign matter from front of cooler coil.

(2) Visually inspect oil cooler for evidence of leaks and to assure good physical condition. Check input and output ports for serviceable threads. Return a damaged, unserviceable cooler to manufacturer for repairs.

d. Oil Line (7): Visually check oil line (7) tubing and flare fittings. Tubing must be free of deep scratches, deep dents, and sharp bends. Flare type fittings must be in good condition with clean, serviceable threads. Replace unserviceable oil line.

e. Oil Filter Head (26):

(1) Ensure that all passages and openings in filter head are open and thoroughly clean.

(2) Visually inspect all parts for physical damage and wear.

(3) Inspect filter head using fluorescent method. (Refer to **Section I,** SPECIAL INSPECTION – ACCEPTANCE STANDARDS.)

(4) Replace all unserviceable parts.

f. For reinstallation of transmission external components, refer to paragraph 6-164.

6-103. TRANSMISSION DISASSEMBLY.

6-104. REMOVAL – TOP CASE AND PLANETARY RING GEAR.

a. Remove main rotor mast if installed. (Refer to paragraph 6-28)

b. Cut lockwire from screws in oil jets (10, figure 6-31 or 16, figure 6-32). Remove screw attaching each oil jet and remove from transmission. Remove screw and Dyna-Seal from outer end of oil jet. Remove all O-rings from jets.

c. Remove retainer ring (31, figure 6-31 or 38, figure 6-32) and remove strainer (30, figure 6-31 or 37, figure 6-32) from transmission case. Remove O-ring (32, figure 6-31 or 39, figure 6-32) from oil strainer.

d. Remove stud nuts (10, figure 6-33) attaching top case (2) to transmission case (22).

e. Tap the top case (2) gently with a plastic mallet, to loosen top case. Lift top case (2) from mounting studs on main case (22).

f. Remove oil transfer dowel (7) with O–rings (6) from dowel holes in top case (2) and main case (22). Remove O-rings from oil transfer dowel.

g. Remove internal planetary ring gear (4) from top case (2).

h. Remove spacer ring (3) from groove in top case (2).

i. Remove O-ring (5) from top of main case (22).

j. Remove filler cap assembly (1) from top case (2).

k. Remove pylon support spindles (39, figure 6-31 or 47, figure 6-32).

(1) Remove attaching stud nuts.

Note

Pylon support spindles are sealed to mounting bosses on top case and may be difficult to remove.

(2) Apply heat lamp to top case (2 figure 6-33) in area of pylon support.

(3) When top case is thoroughly heated, tap pylon support spindle (39, figure 6-31 or 47, figure 6-32) gently with a plastic mallet, to free spindle from case. If support spindle is difficult to free from case, use a wide, thin, metal tool as a wedge (do not use screw driver) and plastic mallet to free support spindle from sealant and top case. Exercise care to avoid damage to top case and support spindle. Do not pry support spindle from case as this can damage parts. When support spindle is loosened, use hands and gentle taps with plastic mallet to work assembly outboard and to remove from case studs.

(4) Clean off sealing compound from support spindle and mounting area on top case.

(5) Repeat the above operation and remove opposite support spindle from top case.

6-105. CLEANING. Clean top case, support spindles and planetary ring gear with cleaning solvent (item 12). Dry with filtered compressed air.

6-106. INSPECTION.

a. Visually inspect all parts for damage and wear. Inspect spline teeth in top case (2, figure 6-33), and spline and gear teeth in planetary ring gear (4) for chipped, cracked or worn teeth. Use a fine India stone (item 95) to dress small nicks, burrs or scratches from spline and gear teeth.

b. Examine studs for condition of threads and for looseness. When necessary, use oversize studs (provide in 0.003 inch increments) to obtain driving torque in accordance with paragraph 6-93g. (Refer to 206A/206B Illustrated Parts Breakdown Manual for stud part numbers and sizes.)

c. Oil Jets. Wash and clean oil passages thoroughly with cleaning solvent (item 12). Drain oil jets and dry with filtered compressed air. All nozzle openings must be open. Replace unserviceable oil jets with like, serviceable jets.

d. Oil Strainer. Inspect screen for holes or other damage. Replace damaged strainer with serviceable strainer.

e. Refer to **Section I,** SPECIAL INSPECTION – ACCEPTANCE STANDARDS, for Magnetic Particle or Fluorescent Penetrant Inspection Criteria.

f. Where evidence indicates wear or damage check dimensions of affected parts. (Refer to paragraph 6-93h. and see figure 6-34 for procedure for using pins to check spline and gear dimensions. Use dimensions shown on Limits Chart to check worn parts. (See figure 6-35)

g. Inspect pylon support spindles (39, figure 6-31) or (47, figure 6-32) per damage limits (figure 6-35A).

6-107. PLANETARY ASSEMBLY.

Note

The 206-040-006 three pinion planetary is installed in 206-040-002-5, -13 and -15 transmissions. The 206-040-010 four pinion planetary is installed in 206-040-002-25 and -29 transmissions.

6-108. REMOVAL – PLANETARY (206-040-006) ASSEMBLY.

a. Apply lockwire to tie each planet gear (6, figure 6-36) of bearing assembly to spider arm (2). Pass lockwire around bearing assembly and spider arm, inboard of spindle head and nut.

CAUTION

Planet gears (6) must be lockwired to spider (2) before removing planetary assembly from transmission. Handle planetary assembly with caution to avoid tilting of planet gears and spilling of spherical rollers. If planet assembly becomes tilted, do not force to straighten; rotate planet gently to straighten. If planet will not turn freely, one or more rollers may have shifted from proper position; press rollers toward center of planet with fingers to free assembly. (Forcing assembly to straighten can brinnel the inner race.)

b. After lockwire is installed around bearing assemblies and spider, lift planetary assembly from transmission.

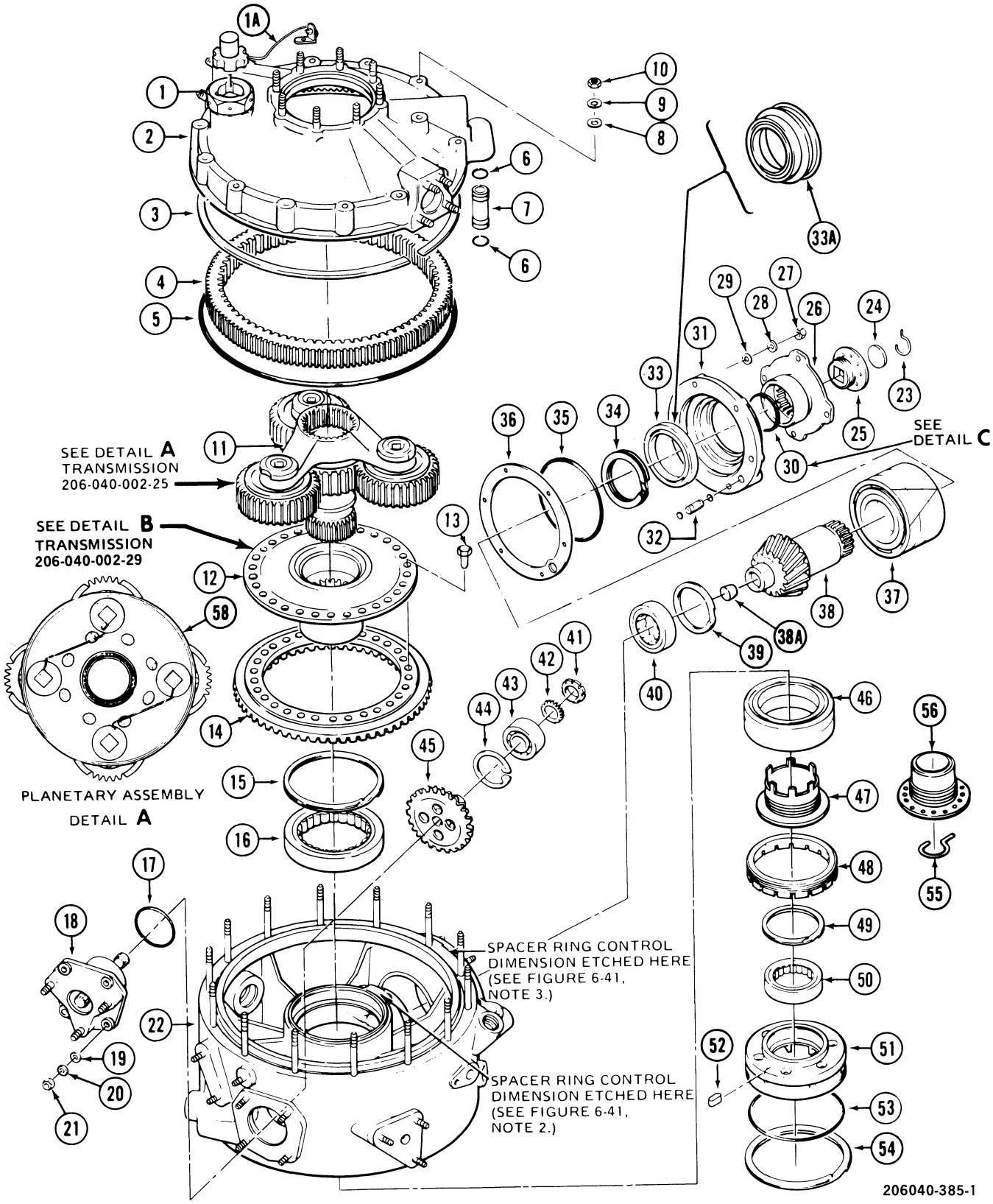

Figure 6-33. Transmission — Exploded View (Sheet 1 of 2)

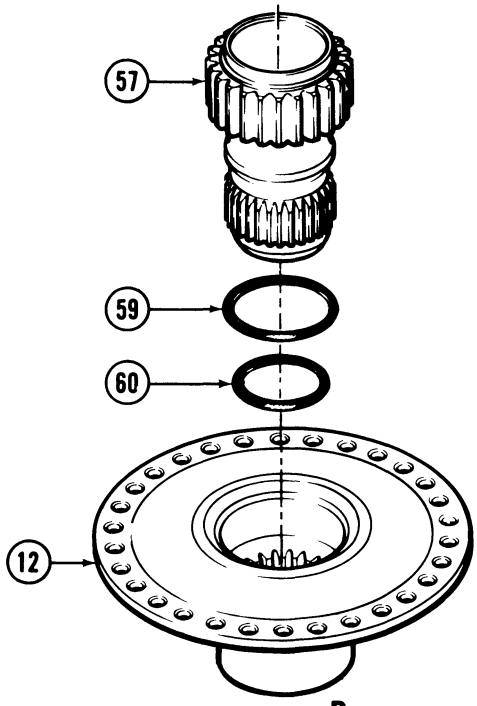

DETAIL B

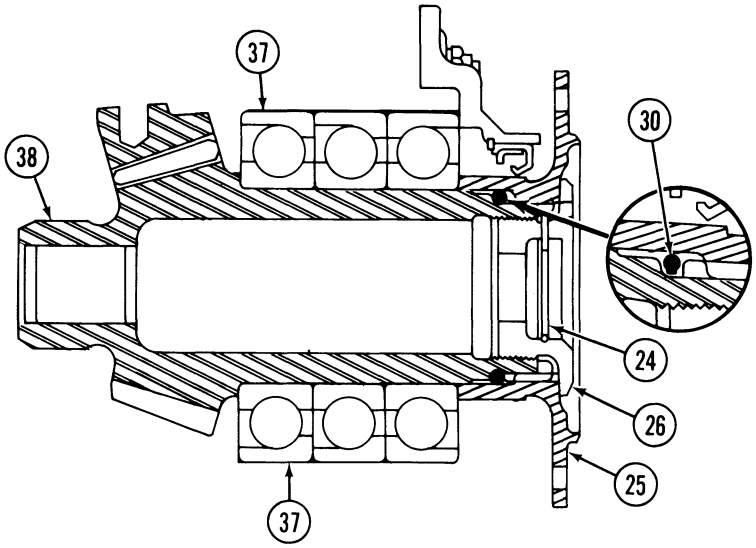

DETAIL C

1. Oil filler cap with breather and strainer
1A. Lanyard
2. Top case assembly, transmission
3. Spacer
4. Gear, internal planetary gear
5. O-ring
6. O-ring
7. Oil transfer dowel, top case
8. Stat-O-Seal
9. Washer
10. Nut
11. Planetary assembly
12. Main input gear shaft
13. Bolt
14. Main input spiral bevel gear
15. Retainer ring
16. Roller bearing, main input gear shaft
17. O-ring
18. Oil pump, transmission
19. Washer
20. Washer
21. Nut
22. Main case assembly, transmission
23. Locking spring
24. Cover, main input pinion
25. Nut, main input pinion
26. Adapter, main input pinion
27. Nut
28. Washer
29. Washer
30. O-ring
31. Housing, bearing and seal
32. Oil drain tube, input seal
33. Seal
33A. Magnetic carbon seal (magnetic ring and seal case)
34. Retainer ring
35. O-ring
36. Laminated shim
37. Triplex bearing, input pinion
38. Main input pinion
38A. Cork
39. Retainer ring
40. Roller bearing, input pinion
41. Spanner nut
42. Lockring
43. Double row ball bearing, accessory drive
44. Retainer ring
45. Spiral bevel gear, accessory drive
46. Duplex bearing, input gear shaft
47. Bearing retainer inner nut, gear shaft
48. Bearing retainer outer nut, gear shaft
49. Retainer ring
50. Bearing, lower mast
51. Support assembly, lower mast bearing
52. Key
53. O-ring
54. Retainer ring
55. Locking spring
56. Nut
57. Sun gear (206-040-562)
58. Planetary assembly
59. Packing
60. Packing

206040-385-2

Figure 6-33. Transmission — Exploded View (Sheet 2 of 2)

6-109. REMOVAL – PLANETARY (206-040-010) ASSEMBLY.

Note

The 206-040-122 sun gear can fall out if not held.

a. Grasp planetary assembly at carrier assembly web (2, figure 6-37) and lift straight out of transmission.

Note

The 206-040-562 sun gear is grease lubricated, and has two packings. The sun gear normally will remain with shaft (12, figure 6-33) when the planetary assembly is removed.

b. Remove planetary sun gear (13) from center of planet gears.

6-110. DISASSEMBLY – PLANETARY (206-040-006) ASSEMBLY.

a. Keep sun gear (9, figure 6-36) in position in center of planet gears, when it is practical, to keep planet gears from tilting. Retain lockwire on planet gears until performance of work requires removal of wire. Rewire as soon as progress of work will permit.

b. Remove cotter pin from each shaft nut (7).

c. Loosen nut (7) from each shaft (1) as follows: Clamp a 1/2 inch square driver (or 1/2 inch piece of square steel) in vise. Invert planetary assembly and socket square hole in shaft head (1) on 1/2 inch square drive clamped in vise. Have helper support and hold planetary assembly. Use 1 7/8 inch socket wrench to loosen shaft nuts. Do not remove nuts at this time.

d. Position sleeve (T101506) in hydraulic press with end of tool, with half-moon insert, uppermost. Invert planetary assembly, and place head of bearing shaft (1) on end of sleeve T101506 and match half-moon notch in shaft head with half-moon insert in end of sleeve. Top side of spider (2) (now inverted) will rest on end of sleeve T101506. Remove nut from one shaft. Use a cylindrical pusher, having an outside diameter small enough to go through bearing race, to press shaft (1) from bearing inner race and spider arm. Cut lockwire holding bearing assembly to spider arm. Carefully hold inner and outer races and lift bearing assembly from spider. Secure inner and outer bearing races of removed beraing assembly with lockwire (item 19). Keep each shaft (1, figure 6-36), nut (6) and bearing assembly together, as removed from spider, place all parts in a plastic bag, and keep separate from other bearing assemblies. Repeat the above instructions and remove the remaining assemblies and separate.

e. Disassemble bearing assemblies one at a time. Remove spherical rollers (4) from one side of bearing assembly and place rollers in a plastic bag. Identify from which side bearing rollers were removed. For example, record: "Serial No. 151302 – Serial No. side" on one plastic bag, and "Serial No. 151302 – side opposite Serial No.", on the other plastic bag.

CAUTION

Do not use bearing assemblies containing mixed bearings or mixed serial number parts.

6-111. DISASSEMBLY – PLANETARY (206-040-010) ASSEMBLY.

a. Cut and remove lockwire from bearing shafts (1, figure 6-37) and bearing shaft nuts (8).

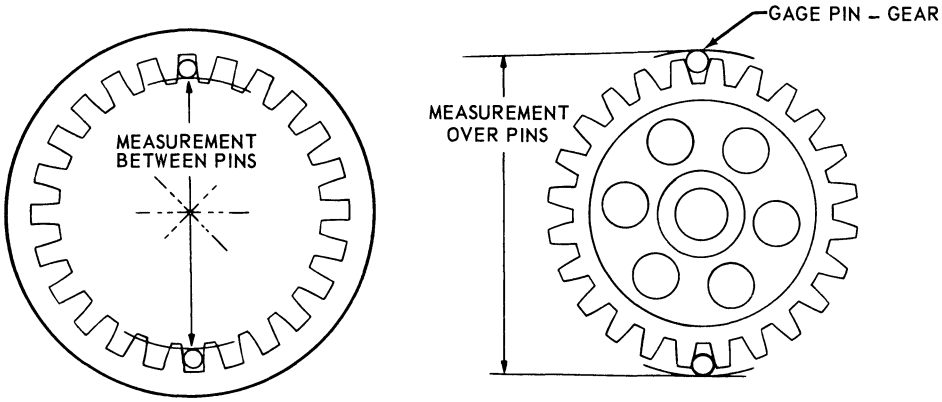

47620-60A

Figure 6-34. Procedure for Checking Gear Dimensions

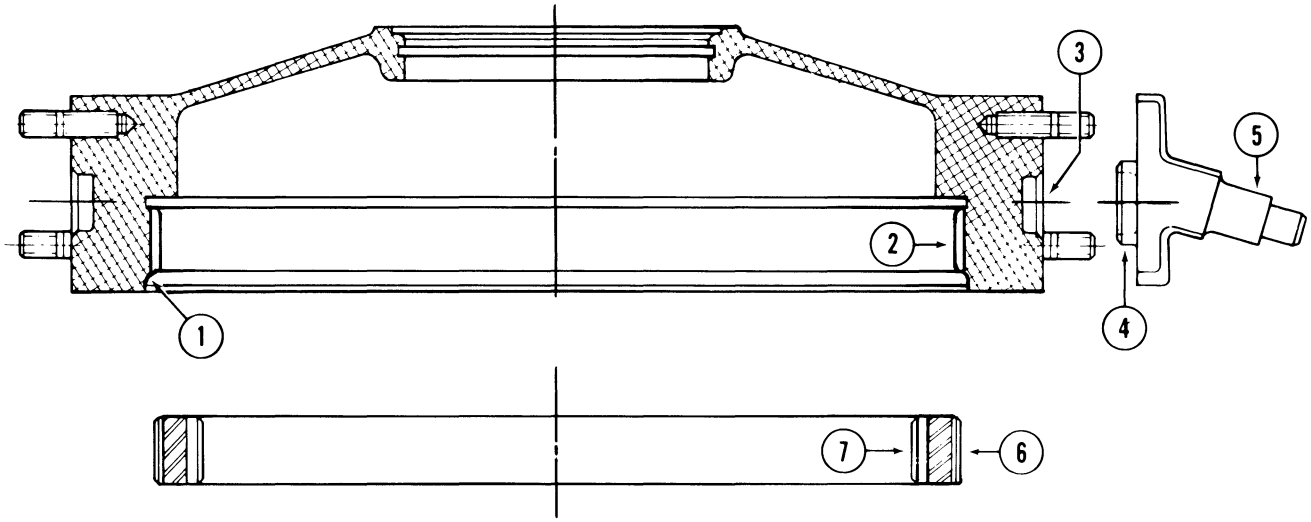

ITEM	NOMENCLATURE		MIN. INCHES	MAX. INCHES
1.	Counter Bore - Transmission Case Alignment	ID	12.2510	12.2545
2.	Involute Spline (Use 0.1200 diameter pin)	ID	11.8438	11.8840
3.	Pylon Support - Mounting Bore	ID	1.2497	1.2511
4.	Pylon Support - Mounting Boss	OD	1.2511	1.2525
5.	Pylon Support - Spindle	OD	0.7480	0.7490
6.	Planetary Ring Gear - Spline Teeth (Use 0.1728 diameter pins)	OD	12.2240	12.2350
7.	Planetary Ring Gear - Spline Teeth (Use 0.2160 diameter pins)	ID	10.5818	10.5900

206040-22G

Figure 6-35. Transmission Top Case Assembly and Planetary Ring Gear — Limits Chart

206-031-554 PYLON SUPPORT SPINDLE

DAMAGE LOCATION SYMBOLS

TYPE OF DAMAGE	MAXIMUM DAMAGE AND REPAIR DEPTH		
MECHANICAL	0.005 in. before and after repair	0.02 in. before and after repair	0.05 in. before and after repair
CORROSION	0.003 in. before repair, 0.005 in. after repair	0.01 in. before repair, 0.02 in. after repair	0.025 in. before repair, 0.05 in. after after repair
MAXIMUM AREA PER FULL DEPTH REPAIR	20 percent of hole area	10 percent of surface area	25 percent of total area
EDGE CHAMFER TO REMOVE DAMAGE	0.01 in.	0.02 in.	0.03 in.
THREAD DAMAGE			
Depth:	One-third thread		
Length:	One-fourth circumference		
Number:	One		

L206033-24A

Figure 6-35A. Pylon Support Spindles — Damage Limits

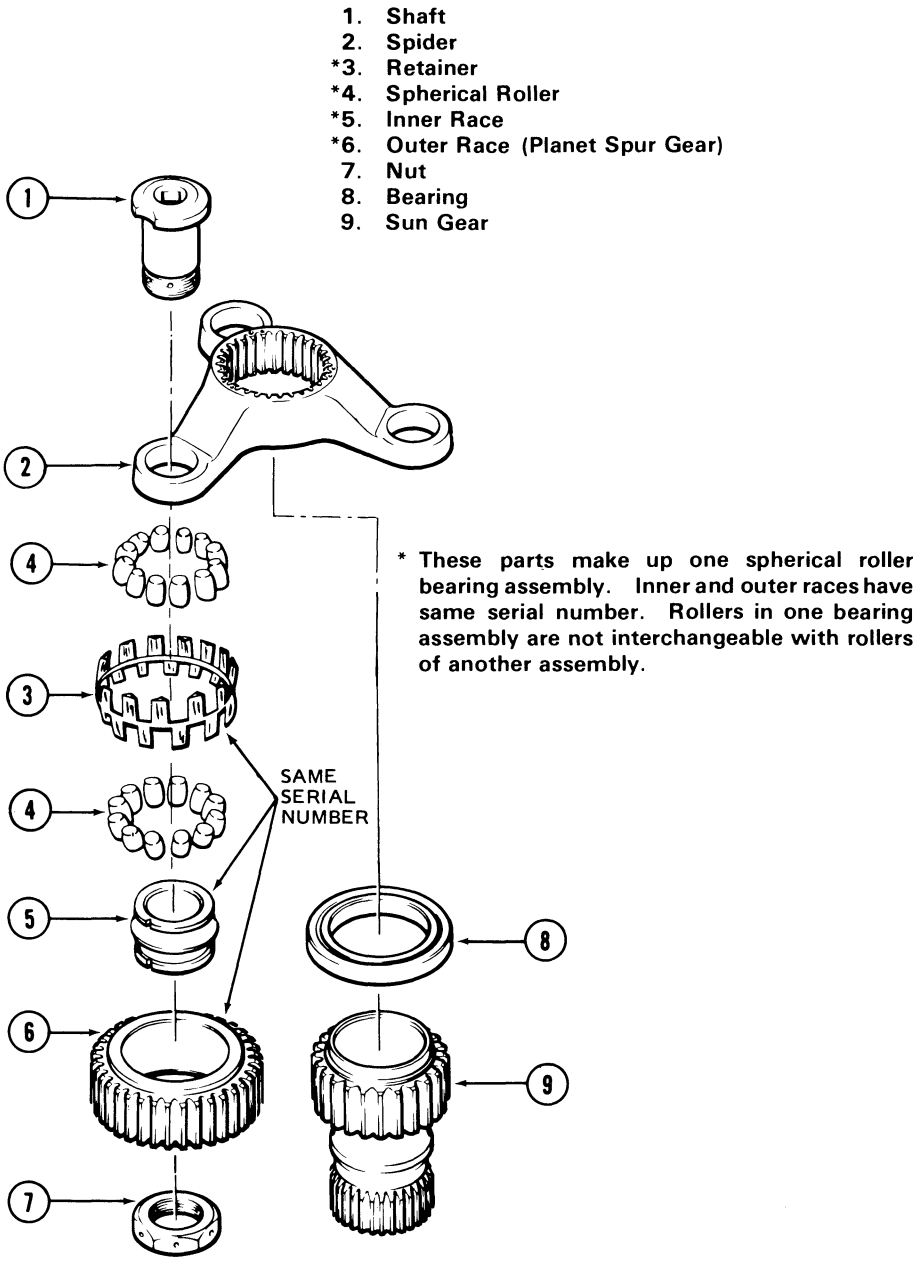

HELICOPTERS 1 THROUGH 1251

TRANSMISSIONS 206-040-002-5, -13, -15

206040-41F

Figure 6-36. Planetary (206-040-006) Assembly — Exploded View

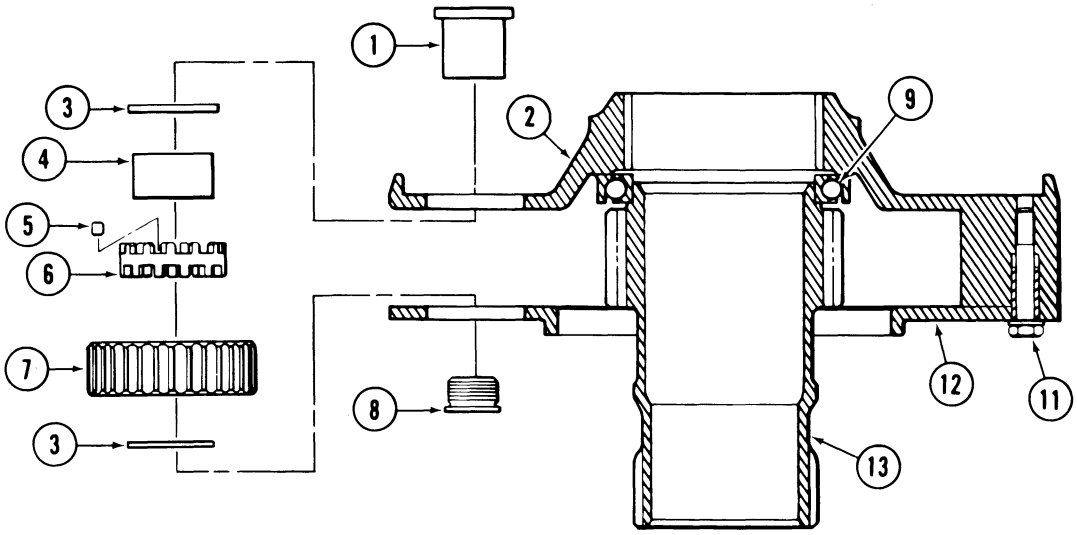

CAUTION: DO NOT DISASSEMBLE CARRIER ASSEMBLY (2 AND 12) BY REMOVING BOLTS (11).

1. Shaft, Bearing
2. Web-Carrier Assembly
3. Washer, Bearing
4. Race, Bearing
5. Roller, Bearing (26 Reqd)
6. Retainer, Bearing (Nylon)
7. Gear Spur - Planetary Pinion
8. Nut, Bearing Shaft
9. Bearing, Thrust
10. Deleted
11. Bolt
12. Plate-Carrier Assembly
13. Gear Spur - Planetary Sun

206040-198-2C

Figure 6-37. Planetary (206-040-010) Assembly — Exploded View (Sheet 1 of 2)

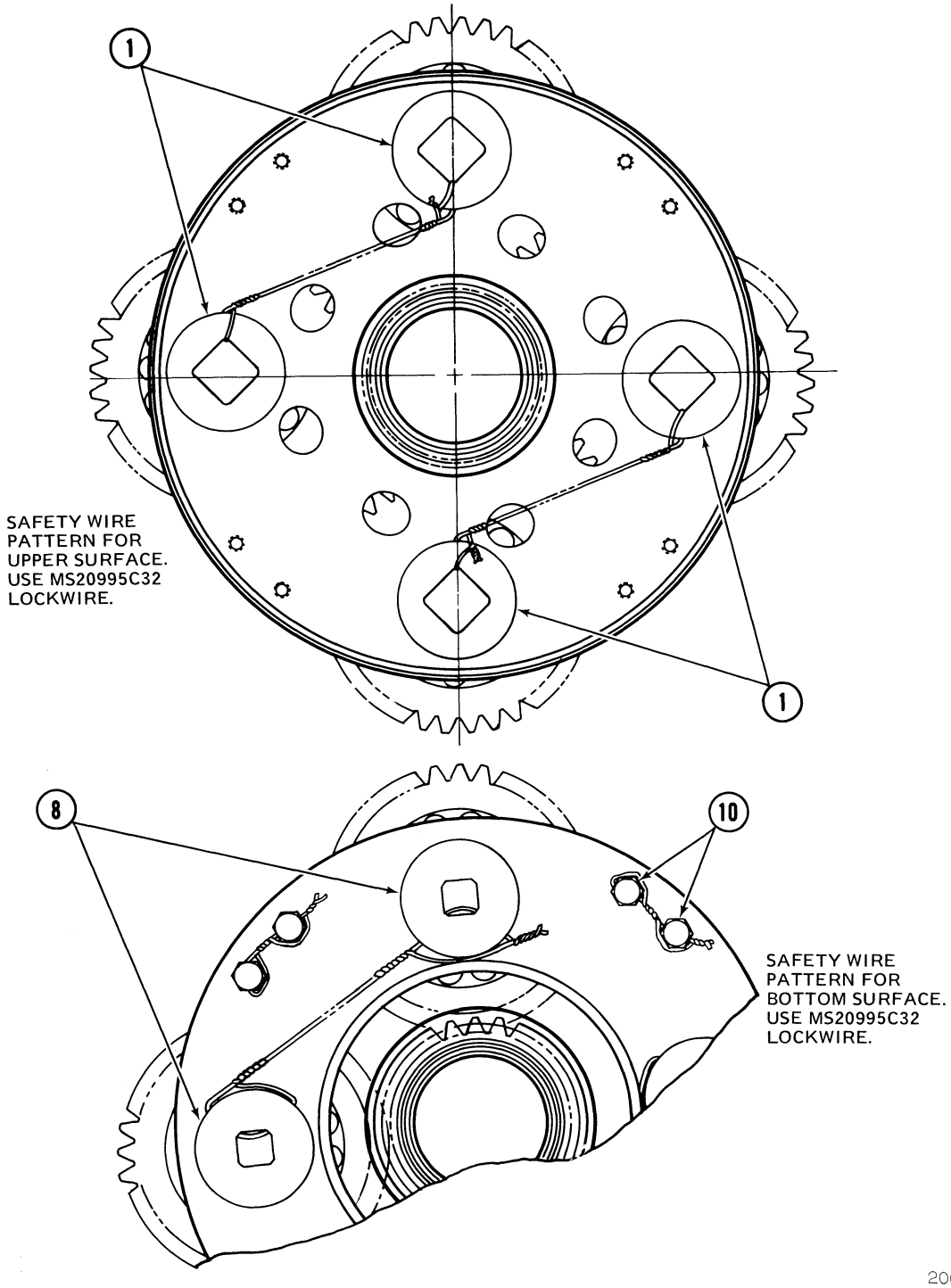

Figure 6-37. Planetary (206-040-010) Assembly – Exploded View (Sheet 2 of 2)

b. Secure carrier assembly web (2) to work bench by installing bolts, padded with suitable tape, through bearing shaft (1). Remove bearing shaft nuts (8), using 1/2 inch square wrench adapter.

c. Press a bearing shaft (1) from planetary assembly, using guide (T101574).

d. Position pin (T101332) through bearing race (4) and top pinion assembly out of side opening of planetary assembly. Carefully hold bearing washers (3) in place to keep roller bearings (5) in bearing retainer (6).

Note

Pinion assembly must be tapped very lightly when removing from planetary assembly to avoid damage to bearings and races.

e. Disassemble pinion assemblies one at a time. Remove bearing washers (3), bearing rollers (5), bearing retainer (6), and bearing race (4), from spur gear (7). Keep all 26 bearing rollers (5) together as a set.

f. Do not disassemble carrier assembly web (2) and plate (12). The assembly is match marked, serial numbered, line reamed and pinned.

6-112. CLEANING. Clean all planetary assembly components with cleaning solvent (item 12). Dry with filtered compressed dry air. Do not permit thrust bearing (8, figure 6-36 or 9, figure 6-37) to spin while drying with compressed air.

6-113. INSPECTION – PLANETARY (206-040-006) ASSEMBLY.

a. Parts should be inspected immediately after cleaning and then reoiled, using turbine oil (item 20). Avoid fingerprints on unoiled surfaces. Exercise care to prevent corrosion of bearing surfaces.

b. Visually inspect all parts for wear or damage.

c. Inspect pinion and gear teeth for chipped, broken or worn teeth.

d. Inspect bearing retainer (3, figure 6-36) for cracks, wear or damage.

e. Inspect bearing surfaces of rollers (4), inner race (5), outer race (planet gear) (6) for chips, cracks, nicks, brinelling, spalling or corrosion.

f. Retain each set of 26 bearing rollers (5) in a separate plastic bag.

g. Refer to Section I, SPECIAL INSPECTION – ACCEPTANCE STANDARDS, for Magnetic Particle or Fluorescent Penetrant Inspection Criteria.

h. Inspect parts dimensionally that show evidence of wear or damage. (Refer to paragraph 6-93h.) Figure 6-34 illustrates methods of measuring between pins and over pins. Limits Chart, figure 6-38 lists dimensions to be checked.

i. Inspect 206-040-122 sun gear (9, figure 6-36) for gear spline wear. (See figure 6-39)

Note

Refer to paragraph 1-41 for Special Inspection of 206-040-562 sun gear.

j. Replace all unserviceable parts.

6-114. INSPECTION – PLANETARY (206-040-010) ASSEMBLY.

a. Parts should be inspected immediately after cleaning and then reoiled, using turbine oil (item 20). Avoid fingerprints on unoiled surfaces. Exercise care to prevent corrosion of bearing surfaces.

b. Inspect upper surface of carrier assembly for corrosion. Pitting is allowable on the top plate in the area shown in figure 6-40 , (except for area contacted by the flange of the pinion shaft). Maximum depth of pitting shall not exceed 0.010 inch and no more than 20 percent of any 1.0 inch square can be affected. Lightly polish pits with No. 600 grit sand paper (item 90) or fine abrasive cloth (item 13) and clean by the following process:

(1) Preparation of Cleaner - The cleaner shall be prepared by thoroughly mixing one volume of cleaner (alcoholic phosphoric solution) and three volumes of water, or a 30 percent solution of Turco-Wo No. 1 (item 33).

(2) Surface Preparation - Surfaces, which are to receive alcoholic phosphoric cleaner, shall be free of oil, grease, shop soil and paint Precleaning shall be accomplished, as required, by any acceptable method.

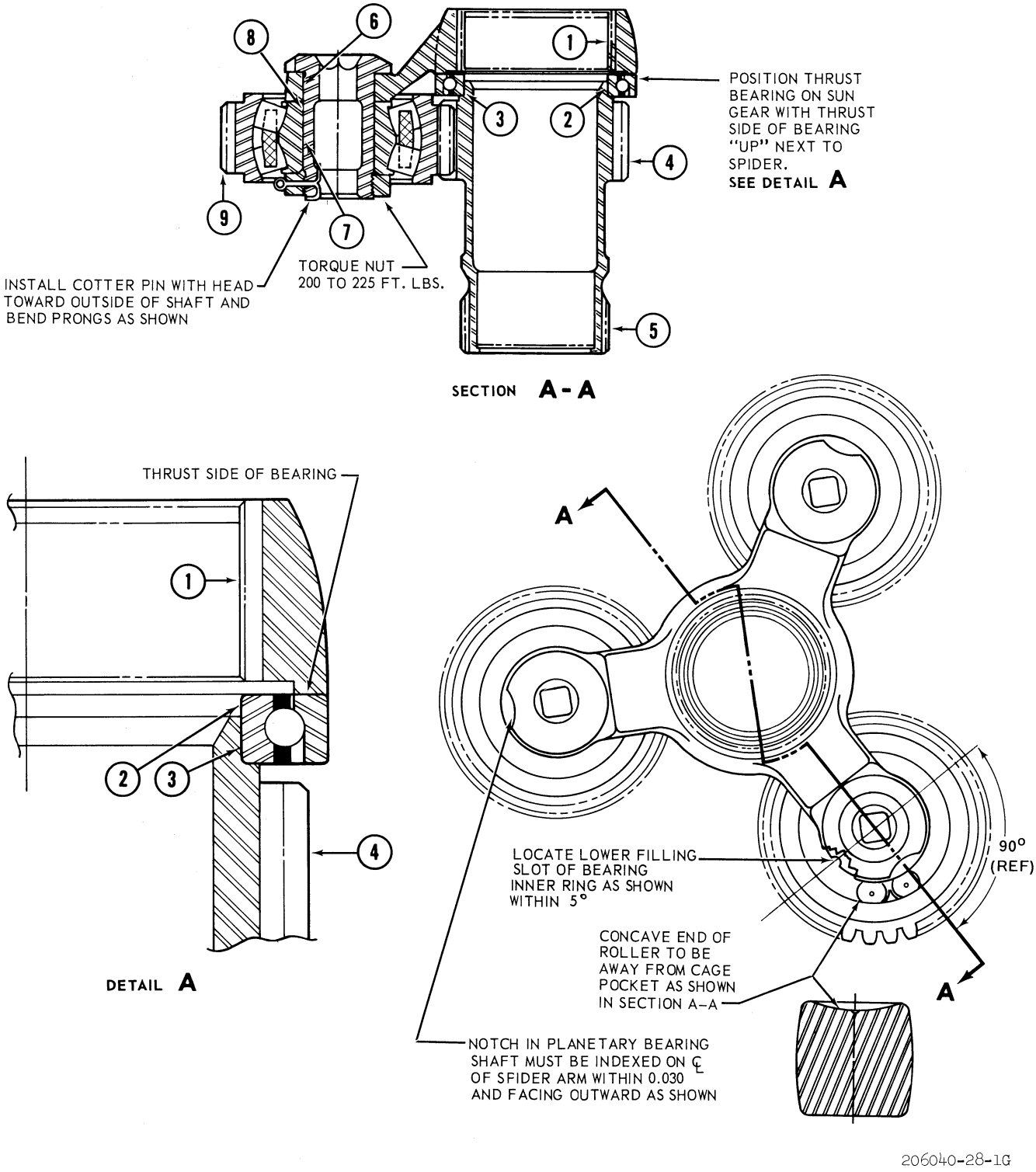

Figure 6-38. Planetary (206-040-006) — Limits Chart (Sheet 1 of 2)

ITEM	NOMENCLATURE		MIN.	MAX.	REPLACE
1.	Spider - Spline - Planetary (Use 0.1440 diameter pins)	ID		2.4653	2.4710
2.	Bearing - Planetary Support Thrust	ID	2.5585	2.5591	2.5593
3.	Gear - Thrust Bearing Seat Planetary Sun	OD	2.5577	2.5583	2.5574
4.	Gear - Teeth - Planetary Sun (Use 0.2160 diameter pins)	OD	3.3776	3.3850	3.3745
5.	Gear - Spline - Planetary Sun (Use 0.1600 diameter pins. Short pins are required for measuring wear pattern.)	OD	2.7363	2.7457	2.7290
6.	Spider - Bearing Shaft Seat - Planetary	ID	1.2496	1.2500	1.2502
7.	Shaft - Bearing Seat - Bearing Retaining	OD	1.2502	1.2506	1.2500
8.	*Bearing - Inner Race - Planetary Spherical Roller	ID	1.2496	1.2500	1.2501
9.	*Gear - Teeth - Planetary (Use 0.1920 diameter pins)	OD	4.1811	4.1894	4.1779

*Items 8 and 9 combine to make a bearing set. The inner race and planetary gear must have the same Serial No. The rollers from one bearing set must not be used in another bearing set.

206040-28-2F

Figure 6-38. Planetary (206-040-006) — Limits Chart (Sheet 2 of 2)

(3) Application Procedures - The cleaner shall be applied to the metal surface by brushing or swabbing (Refer to Note). The cleaner shall remain in contact with the metal surface for one to three minutes and shall be followed by a thorough rinse.

Note

The procedure may be repeated as required to remove light rust. Apply cleaner and rinse to corroded area only. Avoid getting cleaner in joint between spider halves in pinion shaft holes or in threaded holes.

(4) Drying - Surfaces shall be dried using an oven 150°F (66°C) maximum, clean dry rags, cloth, etc., or using compressed air which has been filtered to render it oil and moisture free.

(5) Treat in accordance with paragraph 6-96 for corrosion prevention.

c. Visually inspect all parts for wear or damage.

d. Inspect pinion spur gear (7, figure 6-37) teeth for chipped, broken, or worn teeth.

e. Inspect bearing retainer (6) for cracks, wear, or damage.

f. Inspect surfaces of bearing rollers (5), bearing race (4), and inside surface of pinion spur gear (7) for chips, cracks, nicks, brinelling, spalling, or corrosion.

g. Retain each set of 26 bearing rollers (5) in separate plastic bags.

h. Refer to Section I, SPECIAL INSPECTION – ACCEPTANCE STANDARDS, for Magnetic Particle or Fluorescent Penetrant Inspection Criteria.

i. Inspect dimensions of parts that show evidence of wear or damage, using dimensions listed on Limits Chart. (See figure 6-40). Methods of measuring between pins and over pins is illustrated in figure 6-34. (Refer to paragraph 6-93h.)

j. Inspect sun gear (10, figure 6-40) for gear spline wear. (See figure 6-39 .)

k. Inspect input spiral bevel gear (14, figure 6-33) and input pinion gear (38) for gear wear patterns. (See figure 6-39A)

l. Inspect accessory drive gear (45, figure 6-33) for gear wear patterns. (See figure 6-39A)

m. Replace all unserviceable parts.

6-115. REASSEMBLY – PLANETARY (206-040-006) ASSEMBLY.

a. Install rollers (4, figure 6-36) in bearing assemblies with concave end of rollers on outside and flat end of rollers inside next to retainer (3). Install rollers (4) in bearing assemblies one row at a time, in the same row as removed. Refer to location notation placed on or with plastic bag at time spherical rollers (4) were removed. (Refer to paragraph 6-109 , caution statement and paragraph 6-110e.)

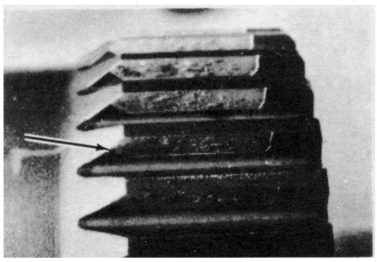

EXAMPLE NO. 1

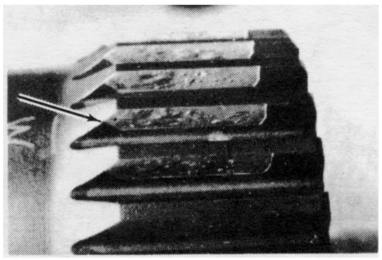

EXAMPLE NO. 2

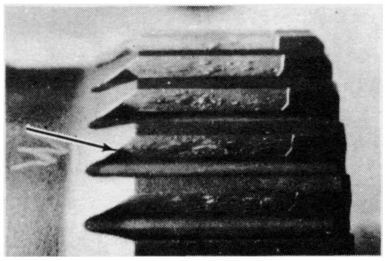

EXAMPLE NO. 3

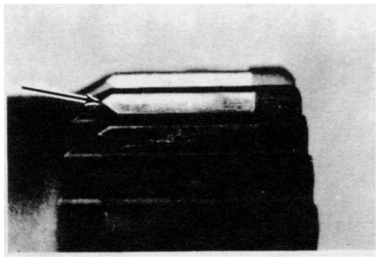

EXAMPLE NO. 4

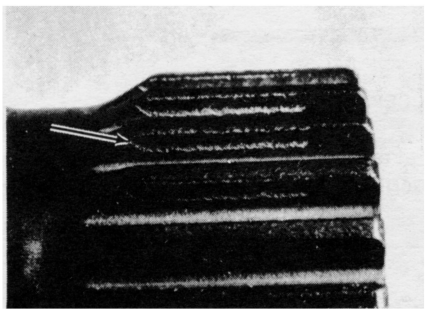

EXAMPLE NO. 5

EXAMPLES OF SPLINE WEAR
The arrow indicates tooth with the following:

No. 1 Light amount of metal deposite
No. 2 Typical metal deposit
No. 3 Heavy metal deposit
No. 4 Without metal deposit
No. 5 Location of narrow wear line

NOTE
Appearance is not cause for rejection.
Serviceability depends on over pin dimension.

206040-131B

Figure 6-39. Transmission Sun Gear Spline Wear Examples

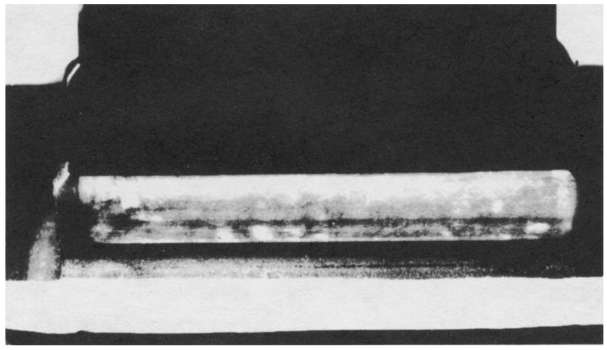

DETAIL **A**
206-040-122 AND 206-040-562 SUN GEAR DESIRED WEAR PATTERN

a. **Observe visible gear wear contact pattern on the drive side of sun gear for full tooth pattern with mating gear.**

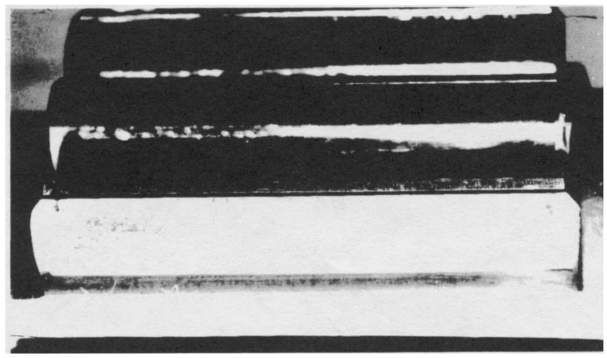

DETAIL **B**
206-040-122 AND 206-040-562 SUN GEAR ACCEPTABLE WEAR PATTERN

b. **A mottled appearance between the sun and planet mesh is normal and shall not be cause for rejection unless the speckles can be felt with a scribe having a 0.002 inch radius spherical point.**

L206040-53-1B

Figure 6-39A. Gear Wear Patterns (Sheet 1 of 3)

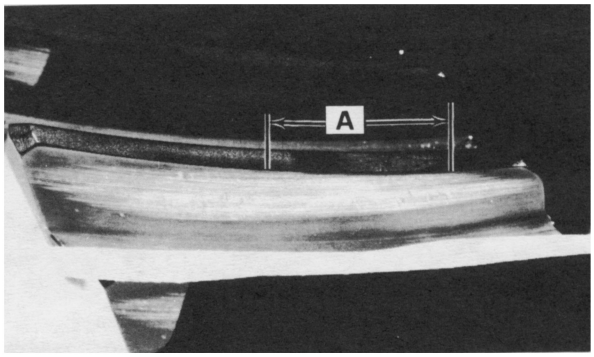

DETAIL C
206-040-021 INPUT SPIRAL BEVEL GEAR

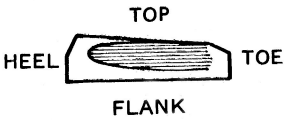

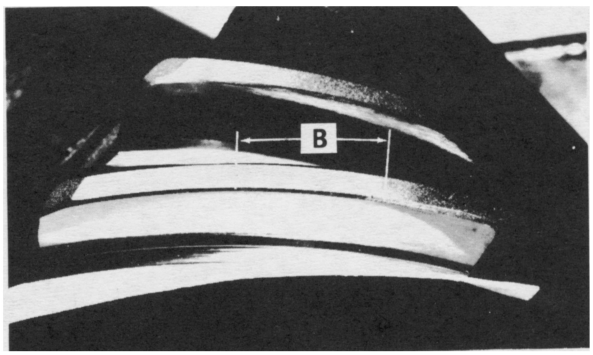

DETAIL D
206-040-020 INPUT PINION GEAR

a. Observe the visible gear contact wear pattern on the convex side of the spiral bevel gear and the concave side of input pinion.

b. Minimum Pattern: The length of contact wear pattern at minimum length is not less than 1.25 inches. The unused portion of tooth may be at heel or toe of tooth.

c. Maximum Pattern: The length of contact wear pattern at maximum length may extend beyond heel or toe of tooth (but not both) with a maximum width of 0.005 inch.

d. Profile Pattern: The maximum width of the contact wear pattern shall not be sufficient to cause a hard bright line in the flank of either the bevel gear or pinion. The minimum width of the contact wear pattern is such that the pattern must touch top of both pinion and bevel gear.

e. Surface Defects: Minor surface defects on the drive face of all gear teeth are acceptable provided they cannot be felt with a probe having 0.002 inch radius spherical point.

f. Observe the visible gear contact wear pattern under load on the convex side of the spiral bevel gear and on the concave side of the input pinion. The desirable pattern is shown on detail C and D. Note that the desired pattern touches at the toe and heel. Dimension A and B is the distance that the wear pattern is at the top edge of tooth.

206040-442

Figure 6-39A. Gear Wear Patterns (Sheet 2 of 3)

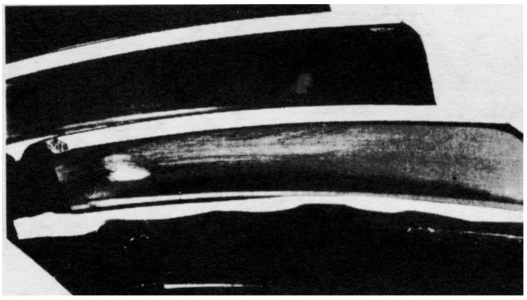

DETAIL **E**
206-040-021 SPIRAL BEVEL GEAR

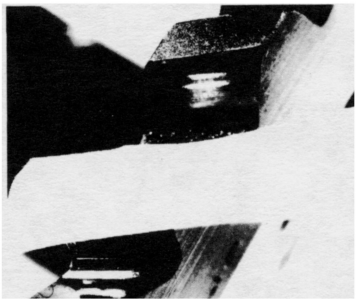

DETAIL **F**
206-040-025 ACCESSORY DRIVE GEAR

a. Observe the visible gear contact wear pattern on the concave side of spiral bevel gear and the convex side of accessory drive gear.

b. The desired wear pattern shall be generally of the size and location as shown in detail "E" and "F" above.

L206040-53-3C

Figure 6-39A. Gear Wear Patterns (Sheet 3 of 3)

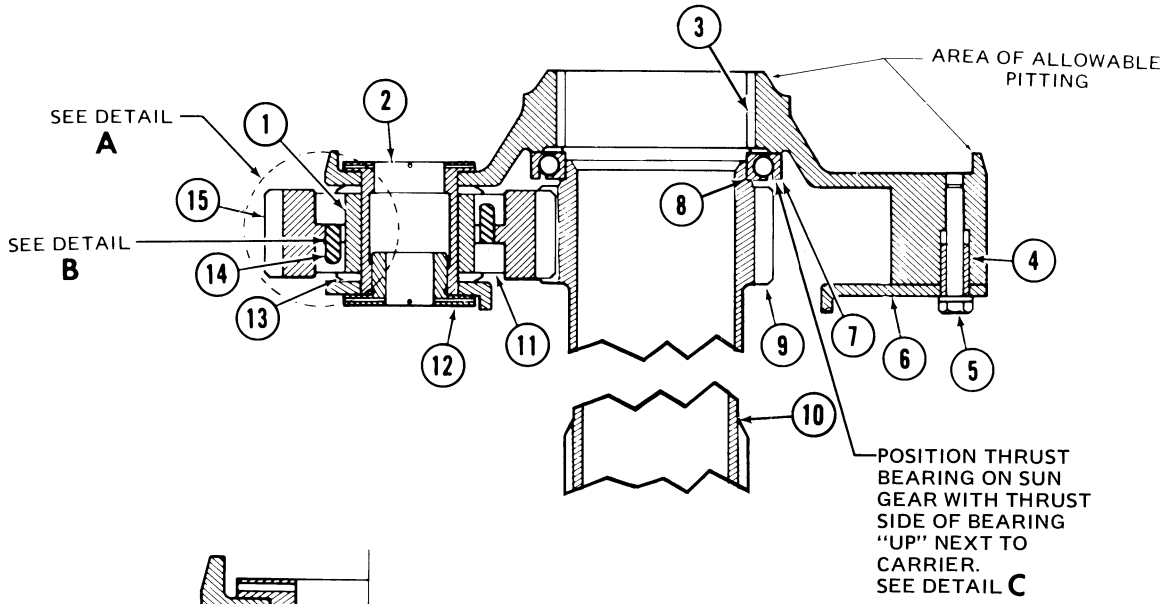

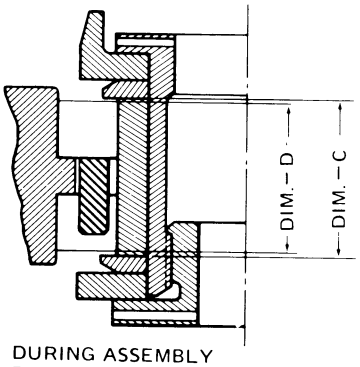

DURING ASSEMBLY
DIM — C — MUST EXCEED
DIM — D — BY 0.0010
TO 0.0027 INCHES

PLANETARY ASSEMBLY
DETAIL **A**

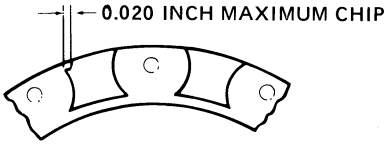

RETAINER, BEARING

DETAIL **B**

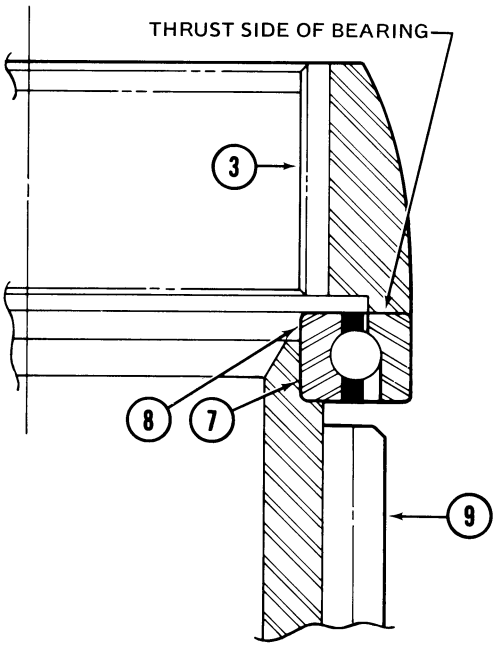

DETAIL **C**

TRANSMISSION 206-040-002-25 AND -29

206040-199-1E

Figure 6-40. Planetary (206-040-010) Assembly — Limits Chart (Sheet 1 of 2)

ITEM	NOMENCLATURE		MIN.	MAX.
			INCHES	
1.	Race, Bearing	ID	1.3750	1.3758
		OD	1.8297	1.8303
2.	Shaft, Bearing	OD	1.3752	1.3760
3.	Web, Carrier Assembly — Shaft Bore —	ID	1.3750	1.3758
	(Between 0.1440 Inch Diameter Pins)		2.4627	2.4710
4.	Bushing			
5.	Bolt			
6.	Plate, Carrier Assembly — Shaft Bore	ID	1.3750	1.3758
7.	Bearing, Planetary Support	ID	2.5585	2.5593
8.	Gear Spur, Planetary Sun — Bearing Seat	OD	2.5574	2.5583
9.	Gear Spur		3.3745	3.3850
	(Over 0.2160 Inch Diameter Pins)			
10.	Sun Gear (206-040-122) - Spline Teeth	OD	2.7290	2.7457
	(Over 1/4 Inch x 0.1600 Inch Diameter Pins)			
	Sun Gear (206-040-562) - Spline Teeth	OD	3.0931	3.1122
	(Over 1/4 Inch x 0.1728 Inch Diameter Pins)			
11.	Roller Bearing	OD	0.4330	0.4331
		HEIGHT	0.4328	0.4331
12.	Nut			
13.	Washer, Bearing	ID	1.3750	1.3755
		THICKNESS	0.1265	0.1270
14.	Retainer, Bearing (Nylon)	See Detail B		
15.	Gear Spur, Planetary — Over Pins	ID	2.6969	2.6976
	(0.1920 Inch Diameter)			
			4.1800	4.1890

206040-199-2D

Figure 6-40. Planetary (206-040-010) Assembly — Limits Chart (Sheet 2 of 2)

b. Check that serial numbers of inner and outer race and cage are matched and on same side of assembled bearing.

c. **Apply a light coating of turbine oil (item 20) to bearing shafts** (1, figure 6-36).

d. Position shafts (1) in spider with half-moon notch of shaft head facing outward and on center line of spider arm. (See figure 6-38) Tap shafts gently with a soft mallet to start shafts in spider.

e. Place protective block, such as masonite, micarta, or aluminum, on support plate in hydraulic press.

f. Invert spider and rest head of shaft, (1, figure 6-36) on protective block in hydraulic press.

g. Position assembled bearing assembly against under side of spider arm (since spider is now inverted the bearing assembly will be above spider arm). Serial numbers on assembled bearing assembly will go next to spider arm. If original bearing is to be reused, it should be positioned in the same manner as originally installed, regardless of serial number side. When planetary assembly is upright and installed in transmission, serial numbers will be in open view for further check. Position lower filler slot as shown on figure 6-38.

h. Position smooth end of sleeve T101506 against inner race (5, figure 6-36) and with half-moon insert end of sleeve next to hydraulic press spindle. Operate hydraulic press and press shaft (1) through hole in spider arm and bearing inner race. Press head of shaft (1) firmly against spider (2). Use a 0.001 inch feeler gage to check clearance between head of shaft and spider to assure that shaft is properly seated. Shaft head must seat up against spider all the way around. If 0.001 inch feeler gage will slide in between head of shaft and spider at any place, shaft is not properly seated. Continue to work with shaft until it seats properly against spider.

Note

Thrust bearing (8) and sun gear (9) must be installed before installing third pinion assembly. (Refer to subparagraph i.)

i. Tilt thrust bearing (8) and slide into position on the spider (2) with thrust side of bearing "up" next to spider.

(See figure 6-33, detail A.) Position sun gear (9, figure 6-36 in center of planet gears (6) and press sun gear into thrust bearing (8). Ensure complete engagement of sun gear into thrust bearing.

j. Position a 1/2 inch square drive (1/2 inch square piece of steel) in vise and socket square hole in head of installed shaft (1) on square drive in vise. Have helper hold bearing outer race (planet gear) (6) to prevent tilting and spilling spherical rollers.

k. Install nut (7) on end of shaft (1). Use 1 7/8 inch socket wrench on nut and torque nut to 200 to 225 foot-pounds. Line up a hole in nut with a hole in shaft. Install cotter pin through shaft and nut, with head toward outside of shaft and bend prongs as shown on figure 6-38. Repeat for other two nuts.

l. Install lockwire (item 19) around planet gears (6, figure 6-38) and spider arm.

CAUTION

Use lockwire around installed planetary gears and spider to prevent tilting of planetary gears and spilling of spherical rollers. If planet assembly becomes tilted, do not force to straighten; rotate planet gently to straighten. If planet will not turn freely, one or more rollers may have shifted from proper position; press rollers toward center of planet with fingers to free assembly. (Forcing assembly to straighten can brinnel the inner race.) Spherical rollers of one bearing assembly must not be mixed with rollers of another bearing assembly. Do not use bearing assemblies with mixed rollers. Retain lockwire on planetary gears and spider until planetary assembly is installed in transmission. After planetary assembly is installed in transmission, remove lockwire.

6-115A. SUN GEAR (206-040-562).

6-115B. REMOVAL — SUN GEAR.

Note

The 206-040-562 sun gear is grease lubricated, and has two packings. The sun gear normally will remain with shaft (12, figure 6-33) when the planetary assembly is removed.

Note

Removal of 206-040-562 sun gear may require light pressure in an arbor press, if it cannot be removed by hand pressure. If arbor press is used, perform the following steps:

a. Remove locking spring (55, figure 6-33) from nut (56).

b. Remove retaining ring from T101502 wrench and insert through splines of nut (56) and position against end of sun gear (57).

c. Remove sun gear (57) from main input gear shaft (12).

d. Remove packings (59 and 60).

6-115C. Deleted

6-116. REASSEMBLY – PLANETARY (206-040-010) ASSEMBLY.

a. Clean and coat all parts with turbine oil (item 20) prior to reassembly. Bearing rollers and races should be treated for corrosion prevention before assembly. (Refer to paragraph 6-96) Avoid handling unoiled parts.

b. Assemble planetary pinion spur gears (7, figure 6-37) as follows:

(1) Install bearing washer (3) with beveled side down on installing pin (T101332) with bearing race (4), bearing retainer (6), and pinion gear (7).

(2) Install bearing rollers (5) in bearing retainer (6) top row.

(3) Install opposite bearing washer (3) on top with beveled side up. Carefully slide assembly to edge of work bench. Hold assembly together by bearing washers (3), and turn over.

(4) Remove bearing washer (3) from top side and install remaining bearing rollers (5) from same set. Reinstall bearing washer with beveled side up.

Note

Individual rollers are not interchangeable and shall not be mixed between the 204-040-725-1, -3, and -101 roller sets. The rollers are identified by a letter stamped on one end of each roller, S for -1, R for -3, and C for -101.

(5) Install shaft guide (T101574), in bearing shaft (1) and coat with turbine oil (item 20). Position carrier assembly with web side up. Position pinion spur gear (7) in carrier assembly aligned with holes in web and plate.

(6) Holding assembled pinion assembly parts together carefully, insert bearing shaft (1) and guide ((T101574) into carrier assembly. Press guide and shaft through carrier assembly and pinion assembly from top, allowing pin (T101332) to be pushed out through bottom side. Use caution to prevent damage to bearing shaft or carrier assembly. Ensure bearing shaft is seated. Remove guide from end of bearing shaft.

Note

Thrust bearing (9) must be installed before last two pinion gears (7). (Refer to figure 6-40 , detail C.)

c. Install three remaining pinion assemblies in the same manner as outlined in subparagraph b.

d. Coat bearing shaft nuts (8) with turbine oil (item 20) and install. Torque nuts to 60 to 80 foot-pounds.

e. Check each pinion assembly for free rolling in carrier assembly. Use a 0.001 inch feeler gage to check for mnimum dimension. Place feeler gage between bearing washers (3) and ends of bearing rollers (5). Dimension —C— must exceed dimension —D— by 0.0010 to 0.0027 inches. (See figures 6-40 , detail A.)

Note

If rollers do not turn freely, check bearing retainer (6, figure 6-37) for burrs and bearing rollers (5) for chips or foreign material. Recheck parts dimensionally if necessary.

f. On upper surface of carrier assembly, lockwire bearing shaft (1) heads in pairs with 0.032 inch lockwire (item 19). On bottom of surface lockwire bearing shaft nuts (8) in pairs with 0.032 inch lockwire (item 19). (See figure 6-37 '.)

g. Install planetary assembly (11, figure 6-33) and sun gear as follows:

(1) 206-040-122 sun gear.

(a) Apply a film of lubricating oil (item 20) to planetary assembly (11), attached 206-040-122 sun gear (13, figure 6-37) and thrust bearing (9), and to the inside diameter of input gear shaft (12, figure 6-33).

(b) Support sun gear (13, figure 6-37) and thrust bearing (9) in planetary assembly and position end of sun gear into input gear shaft (12, figure 6-33). Line in splines and lower planetary assembly into place.

h. Install planetary assembly (58, figure 6-33) and sun gear as follows:

(1) 206-040-562 sun gear. (Vented)

(a) Install packings (59 and 60) on sun gear.

(b) Pack area between the two packings, as noted on figure 6-40A , with lubricant (item 22).

(c) Install the sun gear into the shaft until the upper packing just touches the chamfer at the top of the shaft.

(d) Support the lower end of the shaft in an arbor press or equivalent using a soft aluminum plate. Press down slowly on the sun gear allowing excess grease to flow out of vent hole in sun gear. Check that 0.526 inch is not exceeded between lower end of sun gear teeth and top of shaft (3, figure 6-40A). If 0.526 inch dimension is exceeded the sun gear (57, figure 6-33) is not fully seated. Remove excess grease from inside sun gear.

(e) Apply a film of lubricating oil (item 20) to planetary assembly (58, figure 6-33 and thrust bearing (9, figure 6-37).

(2) 206-040-562 sun gear. (Non-Vented)

(a) Cut an 8-10 inch length of lockwire (item 19) and bend it double to form a closed loop at one end. Do not twist the wire.

(b) Insert the loop end of the wire between the upper packing of the sun gear and the mating diameter of the shaft in the center of one of the scallops machined into the upper packing seat of the sun gear.

(c) Support the lower end of the shaft in an arbor press or equivalent using a soft aluminum plate. Press down slowly on sun gear allowing excess grease to flow past the upper packing at the loop of lockwire. Hold pressure until grease venting stops. Gently remove the lockwire and wipe off vented grease from shaft and sun gear. Check that 0.526 inch dimension is not exceeded between lower end of sun gear teeth and top of shaft. If 0.526 inch dimension is exceeded, the sun gear is not fully seated.

6-117. TRANSMISSION OIL PUMP.

6-118. REMOVAL — TRANSMISSION OIL PUMP.

a. Remove nuts (21, figure 6-33 and washers, (19 and 20) securing oil pump (18) in transmission case (22).

b. Apply heat lamp to transmission case.

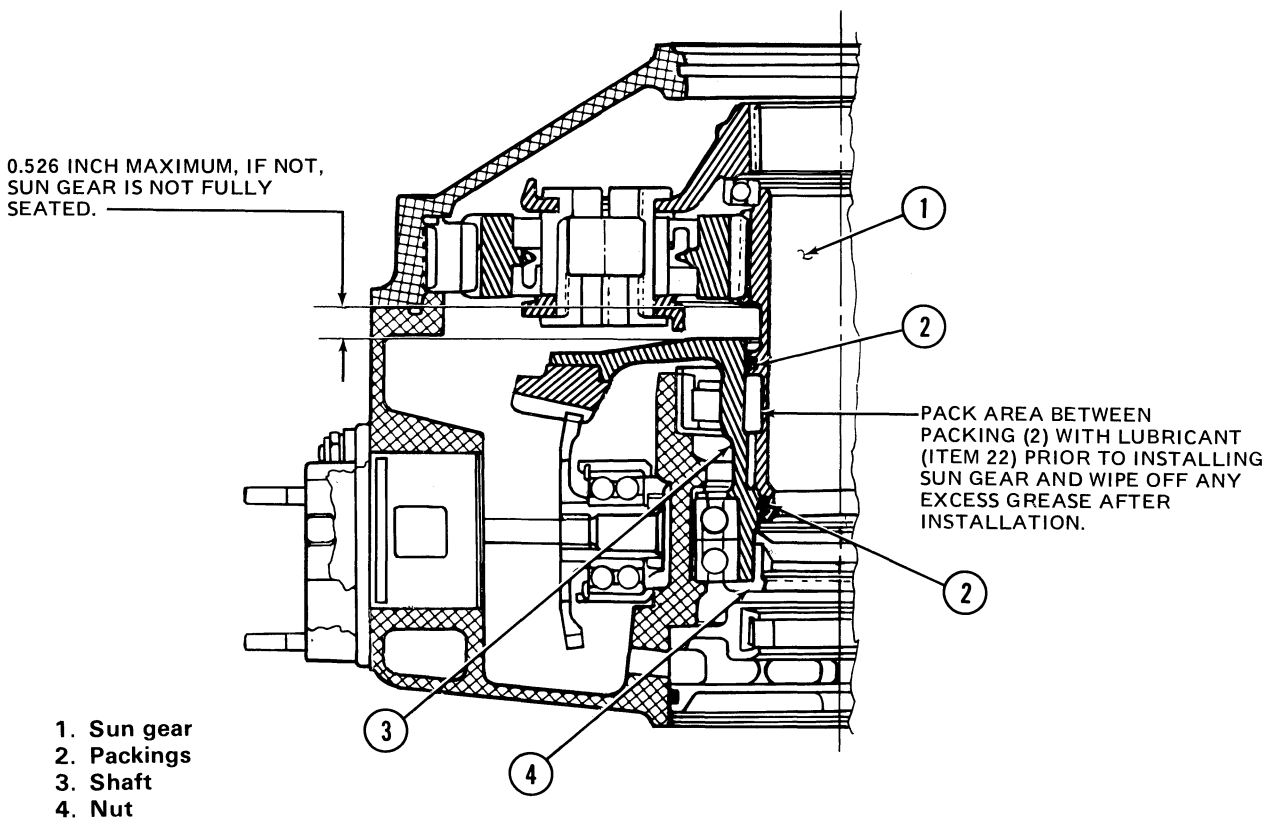

Figure 6-40A. Transmission grease lubrication

c. Attach a slide hammer puller and adapter (Owatonna tool 518) to studs on oil pump (18), and pull pump from transmission case.

d. Remove O-ring (17) from oil pump.

6-119. INSPECTION – TRANSMISSION OIL PUMP.

a. Clean external surfaces with cleaning solvent (item 12, table 1-1), and dry with compressed air.

b. Rotate pump shaft and check for freedom and smoothness of rotation.

c. Visually check spline teeth of pump drive shaft for wear, chips and cracks.

d. Visually inspect bore (18, figure 6-41) in outboard end of oil pump (hydraulic pump mounting pad) for wear and out of round condition.

e. Dimensionally inspect O.D. (17) of oil pump and I.D. (16) of oil pump mounting bore in case. (See figure 6-41.)

f. Replace unserviceable pump.

g. Place serviceable pump in plastic bag for safe keeping until installed.

6-120. DISASSEMBLY — TRANSMISSION OIL PUMP.

CAUTION

Do not remove any part of pump by forcing or prying. Loosen parts by tapping lightly with plastic hammer.

a. Remove retaining ring (1, figure 6-42) from housing (2).

b. Remove retainer (3) and alignment pin (12) from housing (2). Do not remove bearing (4) from retainer (3).

c. Remove shaft (5) and inner gerotor (6) from housing (2) as an assembly. Remove outer gerotor (7) from housing (2).

d. Remove retaining rings (8), inner gerotor (6) and key (9) from shaft (5).

e. Remove retaining ring (13), spacer-washer (14) and oil seal (10) from housing (2).

f. Do not remove bearing (11) from housing (2).

6-121. INSPECTION – INTERNAL – TRANSMISSION OIL PUMP. Replace all damaged or excessively worn parts. Dimensions of new parts and allowable clearances after wear are as follows:

Gerotor Assembly Width	0.4995 to 0.5000 in.
Housing Chamber Width	0.5015 to 0.5020 in.
Allowable Clearance	0.0015 to 0.0027 in.
Outer Gerotor Diameter O.D.	1.6222 to 1.6227 in.
Housing Chamber Diameter I.D.	1.6250 to 1.6255 in.
Allowable Clearance	0.0023 to 0.0037 in.
Bearing Diameter I.D.	0.5000 to 0.5005 in.
Shaft Diameter O.D.	0.4985 to 0.4990 in.
Allowable Clearance	0.0010 to 0.0025 in.
Shaft Splines (both ends)	0.5235 to 0.5258 in.
Over 0.060 diameter pins Replace Dimension	0.5190 in.

6-122. REPAIR AND REPLACEMENT – TRANSMISSION OIL PUMP.

a. Replace worn or damaged parts in accordance with inspection requirements. (Refer to paragraphs 6-119 and 6-121.)

b. Replace packing and seal at each overhaul.

c. When it is necessary to replace gerotors, replace as a matched set.

Note

Due to the small tolerances used in the construction of this pump, further repair of its parts is not recommended.

6-123. REASSEMBLY – TRANSMISSION OIL PUMP.

a. Lubricate parts with turbine oil (item 20, **table 1-1**) for ease of reassembly.

Note

If bearing (11, figure 6-42, detail A) is positioned as shown in detail, step b. is not required.

b. Fabricate transmission oil pump pressing plug as shown in figure 1-13, and reposition bearing (11, figure 6-42) as follows:

(1) From hydraulic pump side of the housing (2), insert fabricated pressing plug into cavity for shaft (5) until it bottoms against bearing (11).

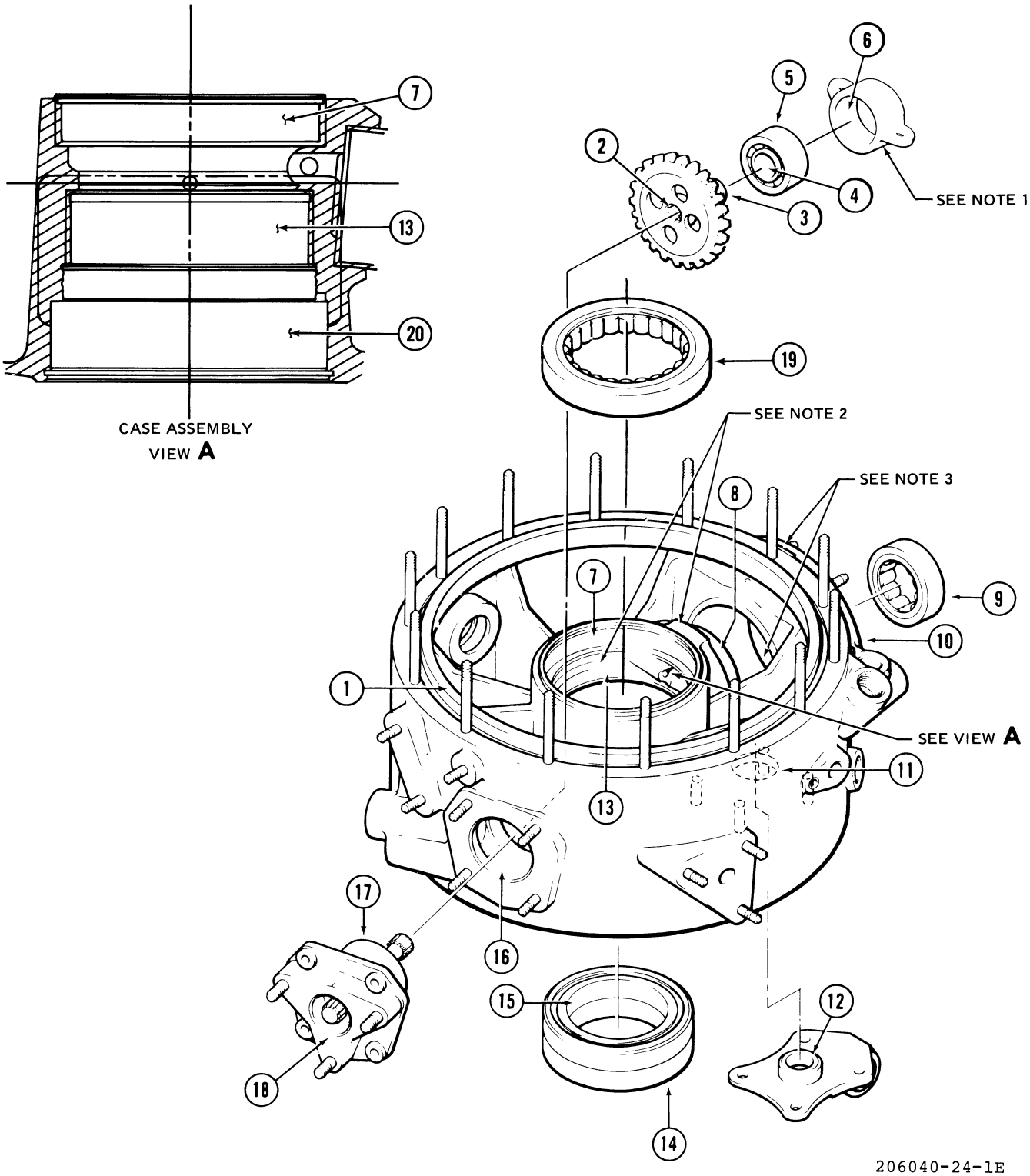

Figure 6-41. Transmission Case and Miscellaneous Parts — Limits Chart (Sheet 1 of 3)

ITEM	NOMENCLATURE		MIN.	MAX.	REPLACE
1.	Case — Top Case Guide Rim	OD	12,2500	12.2515	12.2480
2.	Bevel Gear — Internal Spline — Accessory Drive (Use 0.0540 diameter pin)	ID		0.3633	0.3660
3.	Bevel Gear — Bearing Seat — Accessory Drive	OD	0.7875	0.7878	0.7873
4.	Double Bearing — Accessory Drive	ID	0.7870	0.7874	0.7875
5.	Double Bearing — Accessory Drive	OD	1.8499	1.8504	1.8498
6.	Bearing Housing — Accessory Drive	ID	1.8498	1.8503	1.8506
7.	Case — Upper Bearing Seat — Input Gear	ID	4.7237	4.7242	4.7245
8.	Case — Inner Bearing Seat — Input Pinion	ID	2.4402	2.4407	2.4411
9.	Bearing — Input Pinion — Inner	OD	2.4406	2.4409	2.4405
10.	Case — Triplex Bearing Seat — Input Pinion	ID	3.9360	3.9368	3.9371
11.	Case — Drag Pin Mounting Hole	ID	1.250	1.251	
12.	Drag Pin — Mounting Boss	OD	1.2515	1.2525	
13.	Case — Lowr Bearing Seat — Input Gear	ID	4.3300	4.3305	4.3307
14.	Bearing — Input Gear — Lower	OD	4.3304	4.3307	4.3303
15.	Bearing — Input Gear — Lower	ID	3.1493	3.1496	3.1497
16.	Case — Oil Pump Mounting Base	ID	2.3125	2.3130	2.3134
17.	Oil Pump — Mounting Base to Case	OD	2.3115	2.3120	2.3112
18.	Oil Pump — Hydraulic Pump Mounting Base	ID	1.5000	1.5010	1.5015
19.	Roller Bearing — Main Input Gear Shaft	OD	4.7241	4.7244	
20.	Case Bore — Mast Bearing Support	ID	5.0630	5.0640	5.0700

NOTE 1. Accessory drive gear bearing housing (6) must be kept with transmission case from which it is removed. The bearing housing ID was machined while bolted in place in transmission case, and it has the same Serial No. as the case. To replace unserviceable bearing housing return transmission case to Bell Helicopter Textron, and new housing will be machined while bolted in the case.

NOTE 2. Spacer ring is ground specifically for each case to properly space duplex bearings and input bevel gear. This is required to obtain correct gear mesh and backlash between the main bevel gear and the accessory drive gear and input pinion. Keep this spacer with the transmission case for which it was ground. In the event the spacer is lost or damaged, or if problems arise which suggest improper spacer dimensions exist the following information is applicable.

a. Cases manufactured prior to November 1979: The correct spacer dimension is obtained by subtracting the etched case dimension (located on boss next to upper edge of input gear shaft roller bearing seat) from the gage dimension of 0.2850 to 0.2855 inch. (Manufacture date of case is vibro-etched near case serial number.)

b. Cases manufactured November 1979 and subsequent: The correct spacer dimension is obtained by subtracting the etched case dimension (located on boss next to upper edge of input gear shaft roller bearing seat) from the gage dimension of 0.2830 to 0.2835. (Manufacture date of case is vibro-etched near case serial number.)

c. If the spacer ring is damaged or lost a new one can be ordered from Bell Helicopter Textron. The calculated dimension is the thickness required for the spacer ring and must be included with your order.

d. If unable to obtain proper amount of backlash and spacer dimension is correct in accordance with the above, notify BHT Product Support for disposition instructions.

206040-24-2M

Figure 6-41. Transmission Case and Miscellaneous Parts — Limits Chart (Sheet 2 of 3)

NOTE 3. Spacer ring is ground specifically for each case to properly space triplex bearings and input pinion in transmission case to obtain correct gear mesh of input pinion and main bevel gear. Keep this spacer with the case for which it is ground. In the event the spacer is lost or damaged, or if problems arise which suggest improper spacer dimensions exist, the following information is applicable.

a. The correct spacer dimension is obtained by subtracting the etched case dimension (located on the case above the input pinion) from the gage dimension of 5.0260 to 5.0265.

b. If the spacer ring is damaged or lost a new one can be ordered from Bell Helicopter Textron. The calculated dimension is the thickness required for the spacer ring and must be included with your order.

206040-24-3

Figure 6-41. Transmission Case and Miscellaneous Parts — Limits Chart (Sheet 3 of 3)

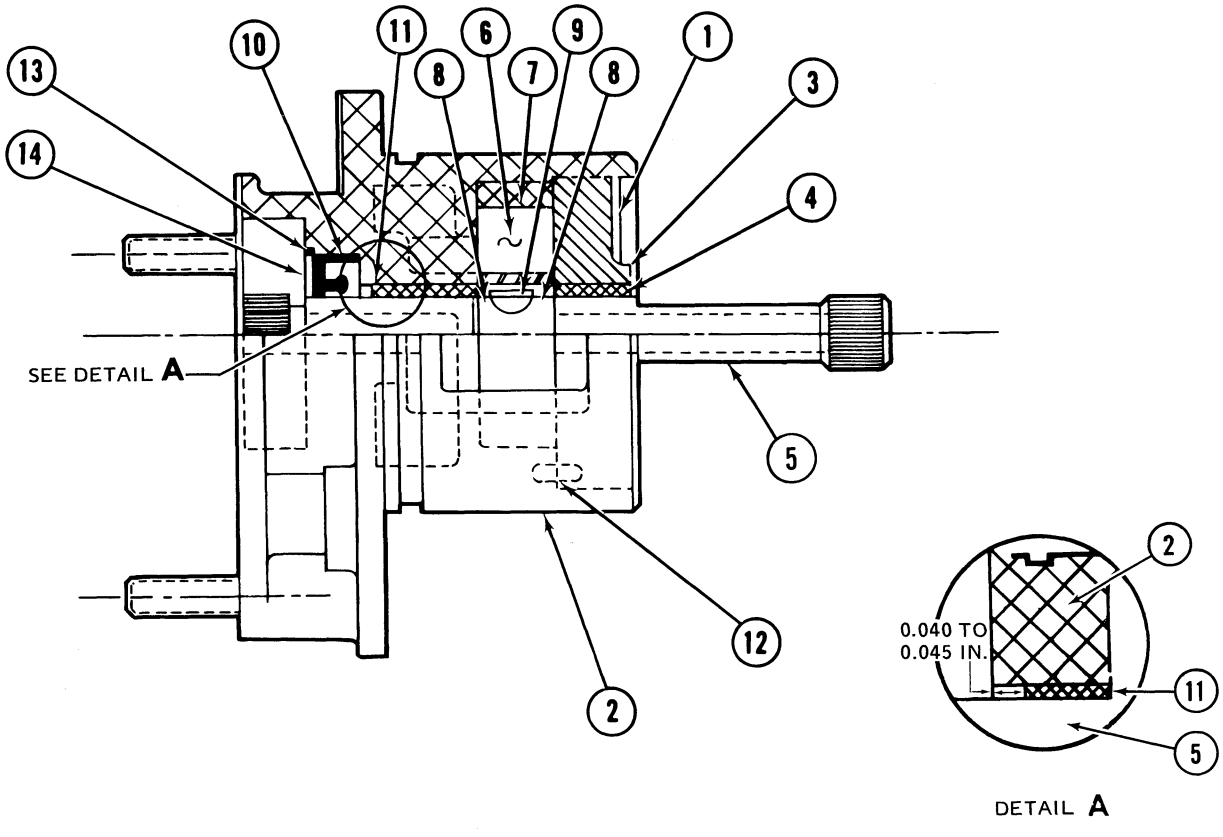

1. Retaining Ring
2. Housing
3. Retainer
4. Bearing
5. Shaft
6. Inner Gerotor
7. Outer Gerotor
8. Retaining Ring
9. Key
10. Oil Seal
11. Bearing
12. Alignment Pin
13. Retaining Ring
14. Spacer Washer

206040-45A

Figure 6-42. Transmission Oil Pump

(2) Apply pressure to pressing plug and bearing (11) until shoulder on pressing plug contacts shoulder in housing (2).

(3) Remove pressing plug from housing (2) and check for a dimension 0.040 to 0.045 inch from edge of shoulder on housing (2) to shoulder of bearing (11). (See figure 6-42, detail A.)

(4) Ensure bearing (11) does not extend into cavity for inner gerotor (6).

c. Install retaining rings (8), inner gerotor (6) and key (9) on shaft (5).

d. Install shaft (5) in housing (2). Install outer gerotor (7) over inner gerotor (6).

e. Install retainer (3) over shaft (5) and into housing (2). Determine that alignment pin (12) engages hole in retainer (3).

f. Install retaining ring (1) in housing (2). Install ring with tapered face away from retainer (3). Ensure ring is firmly seated in groove in housing (2).

g. Install oil seal (10), spacer-washer (14) and retaining ring (13) into housing (2). Exercise caution not to damage sealing lip when installing oil seal (10) over shaft (5).

h. Check pump for freedom of smoothness of operation.

6-124. LOWER MAST BEARING AND SUPPORT ASSEMBLY.

6-125. REMOVAL – LOWER MAST BEARING AND SUPPORT ASSEMBLY.

a. Remove retainer ring (54, figure 6-33) from bottom of transmission case.

b. Pull support (51) from transmission case.

c. Remove O-ring (53) from groove in outer edge of support (51).

d. Remove retainer ring (49) from bearing bore in support (38).

e. Apply heat lamp to support (51). When support is thoroughly warm invert support and roller bearing (50) should come out. If it does not come out with ease, insert a commercial bearing puller through center of bearing and pull against bearing outer ring to remove bearing (50) from support (51). Make sure tips on puller arms are long enough to pull against bearing outer race.

6-126. CLEANING LOWER MAST BEARING AND SUPPORT ASSEMBLY. Clean all parts with cleaning solvent (item 12, table 1-1). Dry with filtered compressed air.

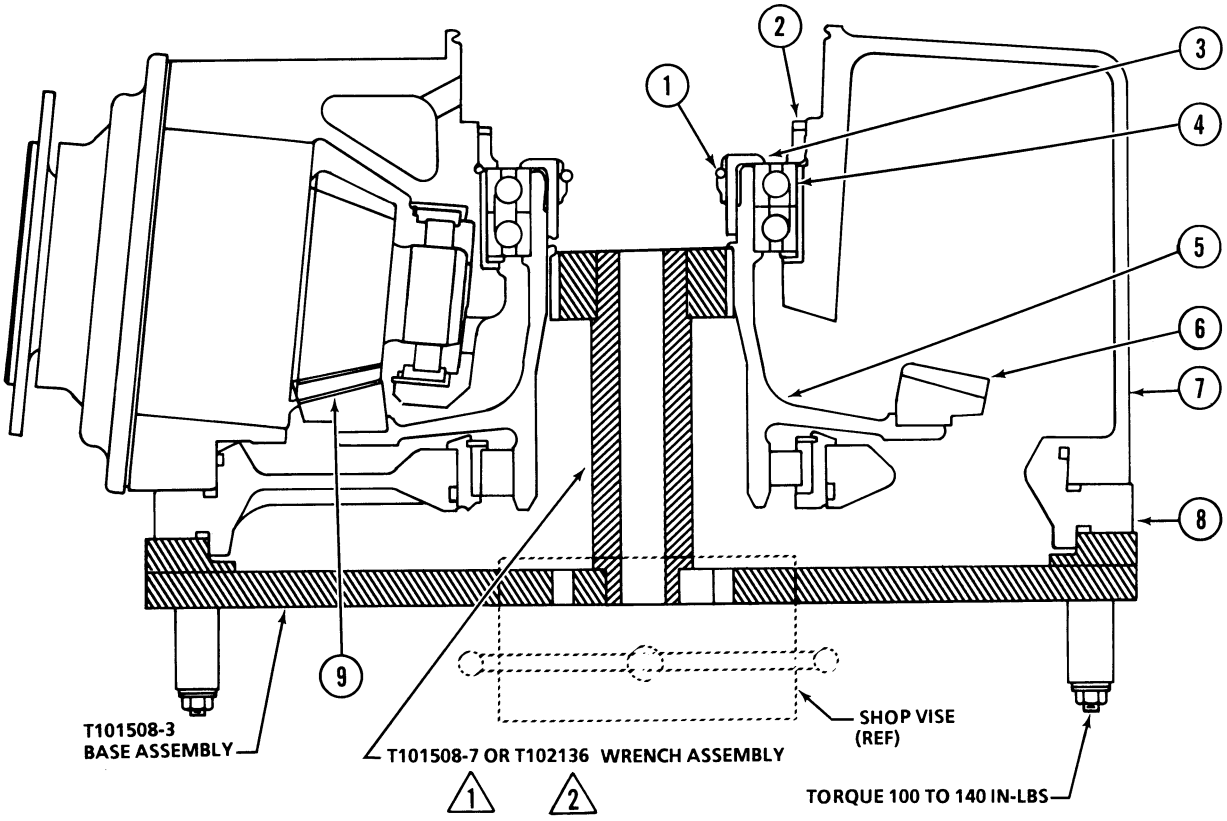

NOTES

1. Use Wrench Assembly T101508-7 For Oil Lubricated Sun Gear.
2. Use Wrench Assembly T102136 For Grease Lubricated Sun Gear.

1. Spring — Locking
2. Nut — Duplex Bearing Retainer
3. Nut — Input Gear Shaft
4. Bearing — Duplex
5. Input Gear Shaft
6. Input Spiral Bevel Gear
7. Main Case
8. Gear Shaft Case
9. Input Pinion Gear

206040-468

Figure 6-42A. Transmission Holding Fixture Set — T101508 Tool Application

6-127. INSPECTION.

a. Visually inspect bearing (50, figure 6-33), for serviceable condition. Replace if required.

b. Visually inspect lower mast bearing support (51) for burrs, nicks, scratches, visible damage or wear.

c. Visually inspect key (52) for physical damage.

d. Inspect support (51) by fluorescent method. (Refer to Section I, SPECIAL INSPECTION – ACCEPTANCE STANDARDS.)

e. Inspect dimensions of parts that give evidence of wear or damage, using dimensions listed on Limits Chart. (See figure 6-43.) (Refer to paragraph 6-93h.) Replace unserviceable parts.

6-128. MAIN INPUT BEVEL GEAR, GEAR SHAFT AND BEARINGS.

6-129. REMOVAL.

a. Install T101508 holding fixture set as follows: (See Section I.) (Refer to figure 6-42A)

(1) Insert square end of T101508-7 adapter for 206-040-002-5, -13, -15, or -25 transmission or T102136 wrench assembly for 206-040-002-29 transmission into mating hole in T101508-3 holding bar.

(2) Hold fixture set together and insert splined end of T101508-7 or T102136 wrench assembly into splines of input gear shaft (12, figure 6-33 , or 3, figure 6-40A) as applicable. Align T101508-3 bar assembly with four studs on main case (22, figure 6-33). Secure bar assembly with washers and nuts.

b. Invert case (22) and clamp holding bar (T101508-3) in vise.

c. Remove bearing retainer inner nut (47) from input gear shaft (12) as follows: Insert splined tool (T101502) into splined inner nut (47), insert a square 1/2 inch drive in tool (T101502) and remove inner nut (47) from shaft (12).

d. Remove bearing retainer outer nut (48) from case (22) as follows: With case (22) inverted and holding bar (T101508-3) clamped in vise, position tool (T101501) on nut (48) and, using a square 1 inch drive wrench, remove outer nut (48) from case (22).

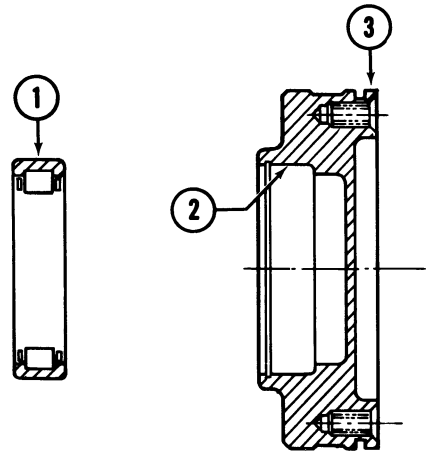

ITEM	NOMENCLATURE		MIN.	MAX.	REPLACE
1.	Bearing - Lower Mast	OD	2.9523	2.9528	2.9522
2.	Support - Bearing Seat - Lower Mast	ID	2.9511	2.9515	2.9518
3.	Support - Lower Mast	OD	5.0615	5.0625	5.0610

206040-26A

Figure 6-43. Lower Mast Bearing Support — Limits Chart

e. Remove splined adapter (T101508-7) or T102136 wrench assembly from case.

f. Invert transmission case (22) and, with bottom side up, position case in hydraulic press. Adequately support top of inverted transmission case (22) in hydraulic press. Position a step plate of sufficient diameter to adequately cover end of input gear shaft (12) and just small enough to clear inner race of duplex bearing (46). Apply pressure with hydraulic press and push shaft (12) from bearings.

CAUTION

Extremely high pressure is required to press input gear shaft (12) from bearings. Adequately support top of case in hydraulic press.

g. Remove holding bar (T101508-3) from top of case and remove bevel gear (14) with input gear shaft (12).

h. Clamp splined plug (T101508-7) in vise. Position input gear shaft (12) on plug and let end of input gear shaft rest against vise.

i. Cut lockwire and remove 30 bolts attaching bevel gear (14) to main input gear shaft (12). Place assembly on bench and use plastic mallet to loosen spiral bevel gear from input shaft.

j. Remove retainer ring (15) from transmission case (22).

k. Apply heat lamp to area of case (22) around input gear shaft roller bearing (16).

l. Install internal puller (Owatonna tool No. 943C) or other suitable bearing puller against roller bearing (16) outer race and pull bearing from case. Look through bottom of case to make sure tips on puller arms are long enough to pull against bearing outer race. Do not pull against bearing cage.

m. Apply heat lamp to case (22) around duplex bearing (46) and heat case thoroughly.

n. Place transmission in hydraulic press, top side of case (22) up. Place plug (T101503) against upper side of bearing outer race. Tool is cut away on sides to permit working through specially cut relief in spacer shim to properly place tool against bearing (46) outer race. (See figure 6-33, Note 3.)

o. Press duplex bearing (46) from case while case is warm.

6-130. INSPECTION.

a. Clean all parts with cleaning solvent (item 12, table 1-1.) Dry with compressed air. Do not let bearings spin while drying with compressed air.

b. Visually inspect bearings. Roll bearings and feel for freedom of roll and for roughness or flat spots.

c. Inspect splines and gear teeth for burrs, nicks, cracks and wear.

d. Inspect dimensions of parts that give evidence of wear or damage, using dimensions listed on Limits Chart. (See figure 6-44) Outside and inside dimensions of duplex bearings are listed under items 14 and 15 figure 6-41. (Refer to paragraph 6-93h.)

e. Refer to **Section I**, SPECIAL INSPECTION – ACCEPTANCE STANDARDS, for Magnetic Particle or Fluorescent Penetrant Inspection Criteria.

6-131. MAIN INPUT PINION AND BEARINGS.

6-132. REMOVAL.

a. Remove lock spring (23, figure 6-33) and cover (24) from input pinion nut (25).

b. Local manufacture holding tool. (See figure 1-13.)

c. Position holding tool on face of input adapter (26, figure 6-33) with holding pins of tool positioned in two holes in face of adapter. Socket a 3/4 inch square drive and wrench in square hole in pinion nut (25). Hold adapter (26) with holding tool and remove nut (25) with square drive and wrench.

d. Remove input adapter (26) from end of pinion (38).

e. Remove stud nuts (27) and washers (28 and 29) attaching seal housing (31) to transmission case. Use plastic mallet to loosen seal housing. Remove seal housing (31) and oil drain tube (32). Remove the two O-rings from oil drain tube (32) and O-ring (35) from input face of transmission case. Remove seal (33) or magnetic carbon seal (33A) from housing.

CAUTION

Replacement of the 206-040-156-1 magnetic carbon seal assembly is not recommended with the transmission installed in the helicopter.

CAUTION

Protect 206-040-156-1 seal assembly against damage until time for inspection or reinstallation. A sheet of clean bond paper should be placed between mating face of magnet and carbon ring and the seal wrapped in plastic bag or equivalent.

Removal of magnetic seal from housing must be by hand pressure only. Use of other devices (e.g. press, hammer, wood block) is very likely to damage the seal beyond use or repair.

f. Insert threaded adapter (T101507-7) into pinion shaft (38). Assemble base (T101507-3) onto end of (Owatonna puller No. 927 with No. 927A legs). Position base (T101507-3) against transmission case and screw the end of puller screw of (Owatonna puller No. 927), into threaded hole in outboard end of adapter (T101507-7) (installed in end of pinion shaft).

g. Use a heat lamp on transmission case and when area around triplex bearing (37) is thoroughly heated use the installed Owatonna puller to pull input pinion (38) and triplex bearing (37) from transmission case.

h. Do not remove specially ground spacer ring from groove in duplex bearing bore, except to clean groove or for inspection. This specially ground spacer must be kept with the case for which is was ground (See figure 6-33, Note 2.)

i. Remove retaining ring (39) from transmission case in front of roller bearing (40).

j. Apply heat lamp to case area around roller bearing (40). Insert tips of outward turned arms of a universal bearing puller through roller bearing (40). Position tips of puller against outer race of roller bearing (40) and make sure pressure will be against bearing outer race. Pull bearing from transmission case.

6-133. DISASSEMBLY.

a. Install bearing pulling attachment (Owatonna 951 or equivalent) around pinion shaft (38, figure 6-33), between pinion and first bearing of triplex bearing (37) set. Do not

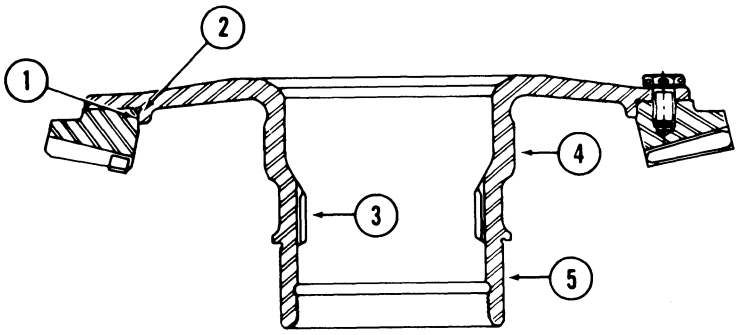

ITEM	NOMENCLATURE		MIN.	MAX.
			INCHES	
1.	Gear - Input Gear Shaft Seat - Sprial Bevel	ID	7.1000	7.1008
2.	Shaft - Spiral Bevel Gear Seat - Input Gear	OD	7.1006	7.1015
3.	Spline - Input Gear Shaft			
	206-040-040-001 - Between Pins (2)	ID	2.2983	2.3070
	206-040-040-003 - Between Pins (2)	ID	2.3121	2.3229
	206-040-040-005 - Between Pins (3)	ID	2.5270	2.5490
4.	Bearing Inner Race — Input Gear Shaft — Upper	OD	3.5657	3.5661 (1)
5.	Bearing Seat — Input Gear Shaft — Lower	OD	3.1506	3.1511

NOTES:

(1) Maximum allowable wear on the diameter is 0.0002 inch, determined by the difference in the worn areas of the shaft.

(2) Use 0.1440 inch diameter, 0.250 inch length pins.

(3) Use 0.1728 inch diameter, 0.250 inch length pins.

206040-387A

Figure 6-44. Input Spiral Bevel Gear and Gear Shaft — Limits Chart

force clamp into contact with shaft. Attachment must contact bearing inner race only, and not outer race. Apply pressure to bearing inner race to avoid damage to bearings while pressing pinion shaft from inner race.

CAUTION

Application of pressure on bearing outer race will damage triplex bearing.

b. Firmly support attachment (Owatonna tool No. 951) with pinion shaft (38) in hydraulic press. Ensure pinion will not come in contact with support in hydraulic press.

c. Obtain a metal cylinder to press against end of shaft and press shaft from triplex bearing.

6-134. CLEANING. Clean all parts with cleaning solvent (item 12). Dry with filtered compressed air. Do not permit bearings to spin while drying with compressed air.

6-135. INSPECTION.

a. Visually inspect input pinion (38, figure 6-33) teeth for nicks, scratches, spalling, cracks or wear. Use India stone (item 95) to dress out minor nicks and scratches.

b. Visually inspect shaft nut (25, figure 6-33) for condition of threads, and for physical damage.

c. Inspect input adapter (26) for evidence of wear, damage or corrosion to mating surface, and

area where seal (33) is in contact. Inspect spline teeth for nicks, scratches, cracks and wear. Use India stone (item 95) to dress out minor nicks and scratches. (Refer to figure 6-44A.)

d. Check bearings by feel for roughness. When replacing bearings replace as a matched set.

e. Refer to Section I, SPECIAL INSPECTION — ACCEPTANCE STANDARDS, for Magnetic Particle or Fluorescent Penetrant Inspection Criteria.

f. Inspect worn or damaged parts, using dimensions listed in Limits Chart. (See figure 6-45).) (Refer to paragraph 6-93h.)

g. At each overhaul inspect magnetic seal (figure 6-44B) as follows:

CAUTION

Following seal inspection procedures must be accomplished under clean room conditions. All seal handlers must wear white cotton gloves. Do not slide seal on mating ring. Do not allow carbon sealing surface or sealing annulus on magnetic ring to contact any other object. Sealing annulus is that sealing area which coincides with the mating seal case carbon face plus additional 0.020 inch per side. Do not allow any foreign particles to contact seal.

(1) With seal assembled, use a clean, nonmetallic feeler-gage to measure gap between magnetic ring (8) and seal case (1). This gap shall measure 0.009 inch minimum.

CAUTION

Do not scratch either sealing surface.

(2) To disassemble seal for inspection, use white cotton gloves, and pull seal halves directly away from each other.

(3) With naked eye, visually inspect magnetic ring (8). Using a high intensity light, inspect for scratches, nicks, and cracks. A cracked ring is not repairable and must be replaced.

(4) Condition of magnetic ring back face and I.D. surface shall be as follows:

(a) Porosity holes and voids under 0.020 inch diameter are acceptable, if less than 0.020 inch deep. Porosity areas shall not extend more than 1/4 of the way across any surface and shall not extend to within 0.070 inch of any edge.

(b) Edge chips on I.D. and O.D. of back face are acceptable if they are under 1/16 inch long and 0.016 inch wide.

(c) No cracks are permitted.

(d) No cold faults are permitted.

(5) Packing groove and O.D. surfaces shall be as follows:

(a) Groove shall be free of burrs that may damage packing.

(b) Porosity areas shall not extend more than 1/4 of way across any surface and shall not extend to within 0.070 inch of any edge.

(c) Porosity holes on packing groove are acceptable if less than 0.006 inch diameter.

(d) Porosity holes in walls of packing groove are acceptable, if less than 0.016 inch diameter.

(e) Chips in edge of packing groove are acceptable, if less than 1/32 inch long and 1/64 inch wide.

(f) No cracks are permitted.

(6) Condition of magnetic ring sealing face, which includes sealing annulus, shall be as follows:

(a) Chips, nicks, and scratches are not allowed on sealing annulus.

(b) Sealing annulus shall be free of porosity holes and pits within limits. Porosity holes must be clean and free of foreign matter. No two porosity holes and/or pits may be aligned radially across sealing annulus.

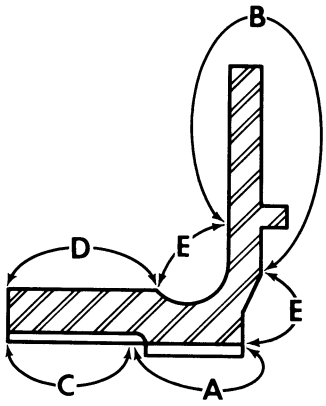

AREA A — Maximum depth of pitting shall not exceed 0.010 inch and no more than 50% of any tooth can be affected. All teeth may be affected within the above limits. Repair is limited to removal of corrosion by wire brush, steel wool or scotchbrite and treatment with alcoholic phosphoric solution.

AREA B — Except in areas of bolt holes, repair corrosion or damage to a max. depth of 0.010 inches. In areas 0.40 inch radius from center of bolt hole, corrosion pits are acceptible to 0.010 inch depth if no more than 40% of the area is affected. Repair in these areas is limited to removal of corrosion by wire brush, steel wool or Scotchbrite and treatment with alcoholic phosphoric solution. Touch up bare reworked areas with brush cadmium plate.

AREA C — Remove corrosion by honing to 2.195 inches maximum diameter.

AREA D — Remove corrosion by honing to 2.497 inches minimum diameter. Brush cad plate reworked area.

AREA E — Damage repair is allowed to .005 inch depth and three 1.0-inch long arc lengths with 1.0 inch minimum separation. Reworked areas must be blended smooth. Touch up reworked areas with brush cadmium plate.

⚠1 In all other areas, no more than 2.0 inches by 0.15 inches. Maximum width may be affected.

206040-388

Figure 6-44A. Corrosion repair and damage limits — (206-040-048) adapter

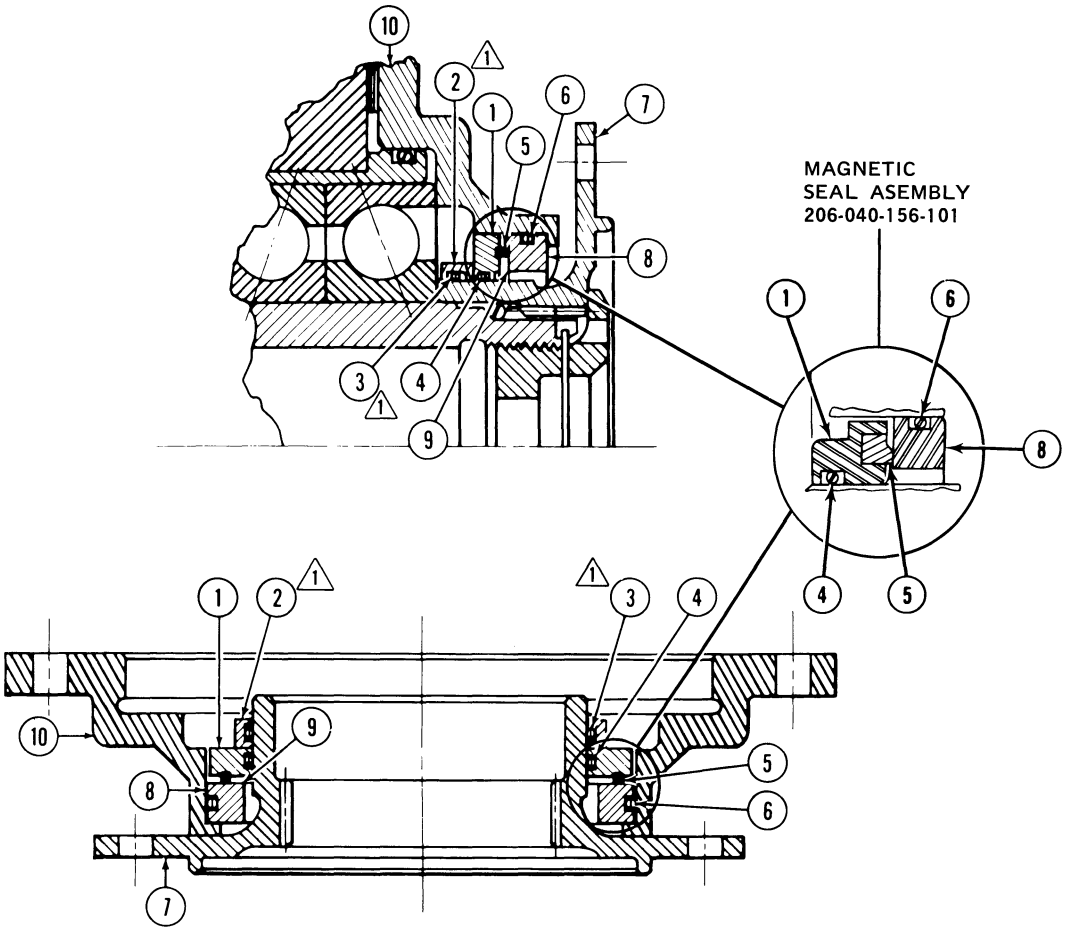

1. Seal case
2. Spacer △1
3. Packing (MS83248/1-144) △1
4. Packing (144 — 5170)
5. Carbon ring
6. Packing (151 — 517)
7. Adapter
8. Magnetic ring
9. Mating surface
10. Seal housing

△1 Spacer (2) and packing (3) not required on magnetic seal assembly 206-040-156-101.

206040-338

Figure 6-44B. Magnetic Seal (Sheet 1 of 2)

PIT LIMITS

SIZE	NUMBER AND LIMITS
Up to 0.010 maximum diameter.	2 per inch minimum of 0.0625 apart. 4
Up to 0.006 maximum diameter.	3 per inch minimum of 0.0625 apart. 4

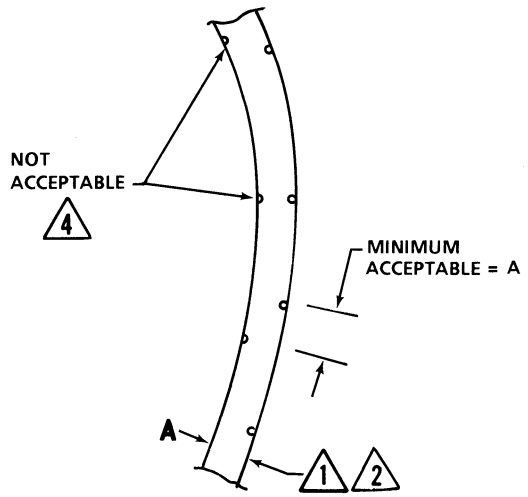

SEGMENT OF CARBON RING

NOTES:

1. Dimension A denotes width of sealing area surface.
2. No chip may be closer than A to another chip.
3. Edges of carbon sealing surface may be chamfered. Chamfer protrusion into sealing surface cannot exceed 5 percent of carbon sealing surface width.
4. Not acceptable, if two pits aline in radial direction.

NO. OF CHIPS	MAXIMUM LENGTH OF CHIP	MAXIMUM PROTRUSION INTO SEALING SURFACE
1 Maximum	0.050	0.016 Seal face width
3 Maximum	0.050	0.008 Seal face width
More than 4	0.050	0.004 Seal face width

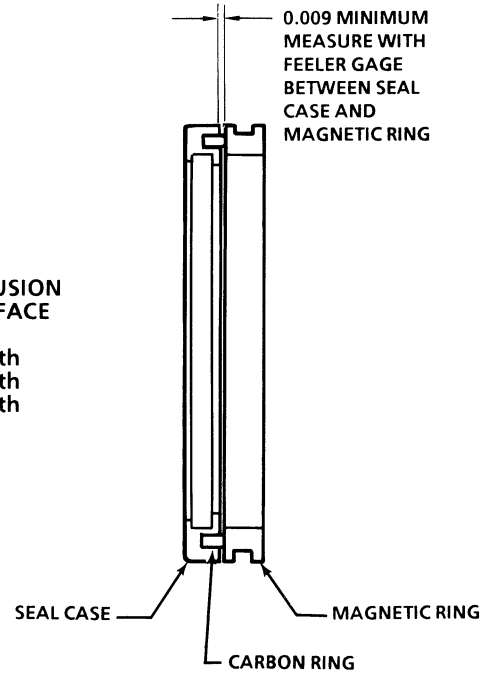

NOTE

ALL DIMENSIONS ARE IN INCHES

MEASURING HEIGHT OF CARBON

206040-443A

Figure 6-44B. Magnetic Seal (Sheet 2 of 2)

(c) Porosity holes outside sealing annulus are acceptable, if less than 0.020 inch diameter and less than 0.016 inch deep. Porosity areas shall not extend more than 1/4 of way across any surface and shall not extend to within 0.070 inch of any edge.

(d) Scratches outside sealing annulus are acceptable.

(e) Chips on I.D. and O.D. edges outside sealing annulus are acceptable, if less than 1/16 inch long and 0.020 inch wide.

(7) With naked eye, visually inspect seal case and magnetic ring (8) under a high intensity light. Minor scratches and nicks on seal case are acceptable. Sealing surface of carbon must show no visible scratches or pits, when viewed by naked eye under a high intensity light. Chips on edges of carbon sealing surface are acceptable, if no two chips are aligned radially and if number and size chips are within limits.

(8) Replace packings (3, 4, and 6).

CAUTION

Do not slide mating carbon and magnetic surfaces of seal against each other at any time. Do not allow either sealing surface to contact anything.

(9) Reassemble by aligning two seal halves and carefully allowing two seal halves to pull together without sliding surfaces against each other.

(10) Repair of magnetic seal by customer is not feasible. Depending on condition of used seal, rework of seal can be accomplished by seal manufacturer; Magnetic Seal Corporation, 166 Bay Spring Avenue, West Barrington, Rhode Island, 02806; Attention: Quality Assurance: Phone: 401-246-1000.

h. Inspect housing in areas (K, L, and M, figure 6-44C). Maximum depth of pitting is 0.030 inch and no more than 40 percent of area within any 1.0 inch square or 20 percent of total area of any diameter or surface.

i. Remove corrosion pitting in area (M, figure 66-44C) contacted by washer by machining pitted surface. Minimum dimension after repair at point Y is 0.287 inch.

Note

Wear limits are provided to show the required fit between mating parts. It is not intended that all dimensions be checked as a prescribed overhaul procedure; however, parts that show evidence of wear or physical damage must be checked dimensionally.

6-136. REASSEMBLY.

a. Install a No. 11 short cork plug (see figure 6-44D) in forward end of main input pinion shaft (38, figure 6-33) as follows:

(1) Clean inboard bore of main input pinion shaft (38) with a cloth dampened with solvent (item 84). Ensure all oil is removed and bore is clean and clear.

(2) Soak cork plug for 20 minutes in undiluted shellac (item 130).

(3) Press cork plug into forward end of input pinion (38) ⅛ inch beyond chamfer. Remove excess shellac and allow cork plug to air dry in input pinion gear. (Refer to figure 6-44D .)

b. Make a pencil mark across inner surface of triplex bearing (37, figure 6-33) inner races in line with dull burr or etch mark on edge of inner races. (Refer to figure 6-44D .)

c. Line up pencil marks on bearing inner races and line up V mark on bearing outer races.

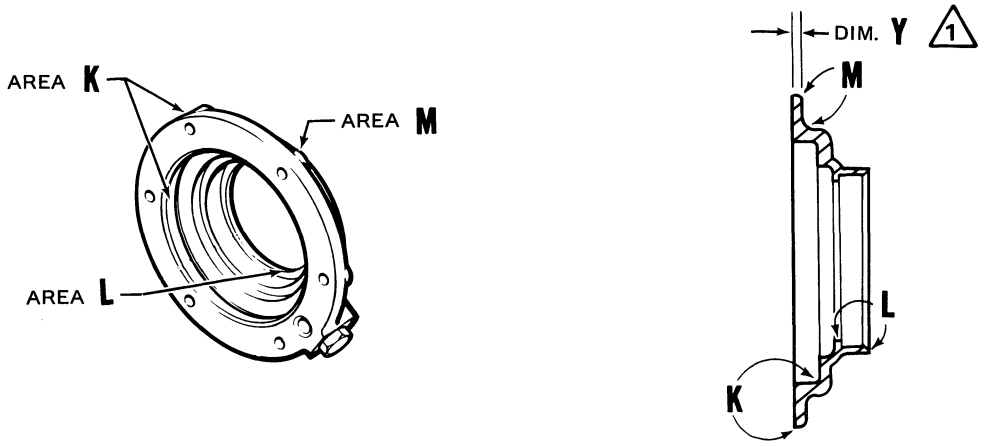

NOTE:

1 Minimum dimension Y, after repair, is 0.287 inch.

206040-297

Figure 6-44C. Input Quill Bearing and Seal Housing Corrosion Limits

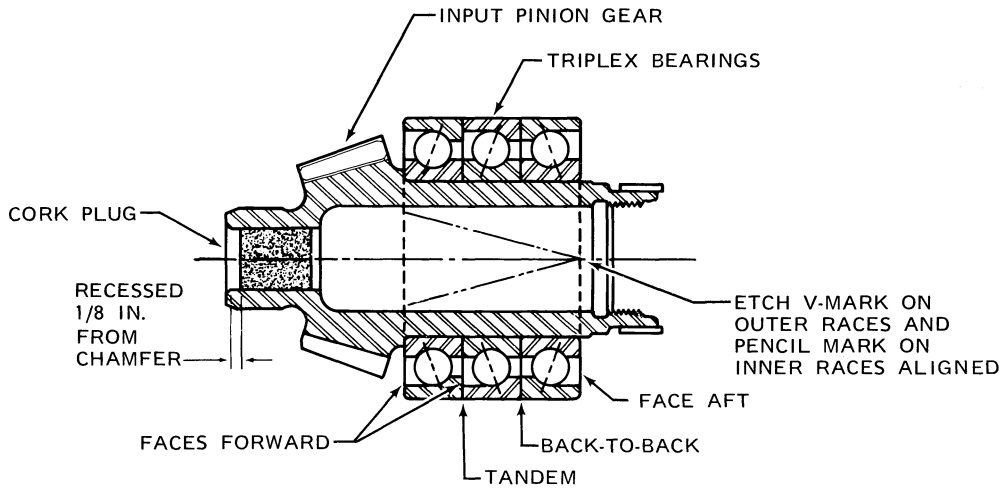

L206040-68

NUMBER	DESCRIPTION	LOCATION	MINIMUM	MAXIMUM
1.	Accessory Bevel Gear — Internal Spline (Between 0.0540 Inch Diameter Pin)	ID	— —	0.3660
2.	Accessory Bevel Gear — Bearing Seat	OD	0.7873	0.7878
3.	Double Bearing	OD	1.8498	1.8504
		ID	0.7870	0.7875
4.	Bearing Housing — Bearing Seat ⚠1	ID	1.8498	1.8506

NOTE: ⚠1 Accessory bevel gear bearing housing must be kept with transmission main case from which it is removed. The bearing housing ID was machined while bolted in place in transmission main case, and it has the same Serial No. as the case. To replace unserviceable bearing housing return transmission main case to Bell Helicopter Textron, and new bearing housing will be machined while bolted in the main case.

L206040-63

Figure 6-44D. Triplex bearings alignment

d. Lubricate main input pinion shaft (38, figure 6-33) with lubricating oil (item 20) and press bearings onto shaft one at a time and in the following order: First bearing onto shaft with face toward pinion; second bearing face to back of first bearing, and third bearing will be back to back with second bearing. (Refer to figure 6-44D.) Be sure inner race seats firmly against shoulder on shaft.

e. Roll triplex bearings (37, figure 6-33) with fingers to check for freedom of movement.

f. Install new wear sleeve on adapter (26) if wear exceeds 0.002 inch on adapter or on an installed wear sleeve. (Refer to figure 6-44E)

Note

If magnetic carbon seal 206-040-156-1 (33A, figure 6-33) is to be installed, wear sleeve is not needed.

(1) If new wear sleeve is to be installed, remove existing wear sleeve by cutting a groove across the wear sleeve and striking the groove with a blunt, wedge-shaped chisel. Inspect adapter (26, figure 6-33) for damage.

(4) Apply heat lamp to wear sleeve. When heated, install wear sleeve on adapter (26). Position wear sleeve to where it is square to end of adapter not to exceed 0.015 inch recessed. Blend excess adhesive. (Refer to figure 6-44E)

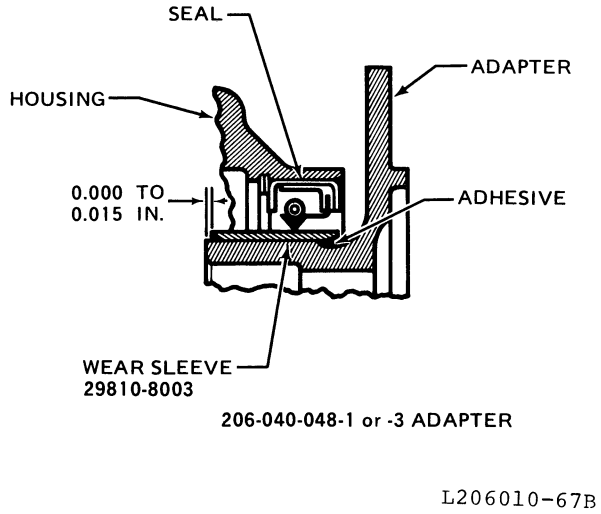

Figure 6-44E. Main input quill adapter — wear sleeve

(5) Cure adhesive for 24 hours at 75°F (24°C) (full cure 5 to 7 days), or for 60 minutes at 170° to 190°F (77° to 88°C).

g. Install new seal (33, figure 6-33) in housing (31) as follows:

Note

When installing new magnetic carbon seal (33A), proceed to paragraph 6-156o.

(1) Clean inside diameter of housing (31) and outside diameter of seal (33) with cloth dampened with MEK (item 17). Wipe surface dry.

(2) Install retainer ring (34).

(3) Apply a film of sealing compound (item 8) to outside diameter of seal (33) and inside diameter of housing (31).

(4) Press seal (33) into housing (31) until seated and with metal face outboard (part number side). Remove excess sealing compound.

(5) Coat inside cavity and lip of seal (33) with grease (item 21).

6-137. ACCESSORY DRIVE GEAR AND BEARING.

6-138. REMOVAL.

a. Remove two bolts securing accessory drive bearing housing to transmission case and remove accessory drive gear (45, figure 6-33), double bearing (43) and bearing housing from transmission case (22). (See figure 6-41 , Note 1.)

b. Straighten two holding tangs of lockring (42, figure 6-33).

c. Clamp tool (T101504) in vise and position accessory drive gear (45) over tool, with the four legs of the tool passing through holes in accessory drive gear (45). Remove spanner nut (41) from accessory drive gear shaft (45) and lift off lockring (42).

d. Position the four legs of plate assembly (T101504) through holes in accessory drive gear (45). Place plate assembly and gear in hydraulic press, and using appropriate aluminum pressing plug press shaft of accessory drive gear (45) from bearing (43).

e. Remove retainer ring (44) from bearing housing.

f. Apply heat lamp to bearing housing. When housing is thoroughly heated press bearing (43) from housing, using suitable pressing tool and adequate support of bearing housing.

g. Reinstall accessory drive gear bearing housing, number side up, in transmission case (22).

Note

The bearing housing bears the same serial number as the transmission case and is considered a part of the case. Keep housing with transmission case. If lost or damaged return transmission case to Bell Helicopter Textron, where a new bearing housing will be machined while installed in transmission case.

6-139. CLEANING. Clean all parts with cleaning solvent (item 12). Dry with filtered compressed air. Do not permit bearing to spin while drying with compressed air.

6-140. INSPECTION.

Note

Accessory drive bearing housing is a part of transmission case and will be inspected when transmission case is inspected. (Refer to paragraph 6-149.)

a. Visually inspect bearing (26, figure 6-33). Roll bearing and feel for freedom of roll; check for roughness and flat spots.

b. Inspect spiral bevel gear (45) splines and gear teeth for burrs, nicks, cracks and visual wear. Use a fine India stone (item 95) to dress out minor burrs.

c. Refer to Section I, SPECIAL INSPECTION – ACCEPTANCE STANDARDS, for Magnetic Particle or Fluorescent Penetrant Inspection Criteria.

d. Dimensionally inspect worn parts. (See figure 6-41.)

e. Replace all damaged or worn parts that are unserviceable.

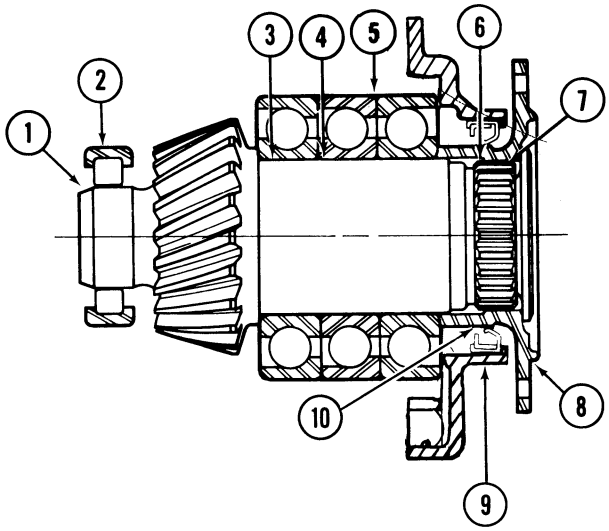

ITEM	NOMENCLATURE		MIN. INCHES	MAX. INCHES
1.	Input Pinion — Inner Bearing Race	OD	1.4172 ⚠1	1.4175
2.	Bearing — Input Pinion — Inner	OD	2.4405	2.4409
3.	Input Pinion — Outer Bearing Seat	OD	2.1658	2.1663
4.	Bearing — Input Pinion — Outer	ID	2.1651	2.1655
5.	Bearing — Input Pinion — Outer	OD	3.9366	3.9370
6.	Input Pinion — Spline — Adapter (Use 0.1600 Diameter Pins)	OD	2.2385	
7.	Adapter — Spline — Input Pinion (Use 0.1440 Diameter Pins)	ID		1.7994
8.	Adapter — Driveshaft Seat — Input Pinion	OD	3.4345	3.4360
9.	Housing — Bearing and Seal — Input Pinion	ID	3.2495	3.2533
10.	Adapter — Seal Journal	OD	2.4970	2.5030

⚠1 Maximum allowable wear on the diameter is 0.0002 inch, determined by the difference in the worn and unworn areas of the shaft.

206040-25D

Figure 6-45. Input Pinion Assembly — Limits Chart

6-141. DRAG PIN ASSEMBLY.

6-142. REMOVAL.

a. Remove four stud nuts and washers attaching drag pin assembly (28, figure 6-31 or 32, figure 6-32) to bottom of transmission case.

Note

The drag pin assembly boss mounts into case with a tight fit. Sealant is applied between case and drag pin assembly which may cause difficulty during removal.

b. Apply heat lamp to case in area of drag pin assembly.

c. When case is thoroughly heated tap drag pin assembly gently with a plastic mallet. If drag pin will not come easy from case, use a flat, thin, metal tool, approximately 1.0 inch wide, (do not use a screw driver) as a wedge between drag pin assembly and case. Exercise care to avoid damage to case or drag pin assembly. Do not pry drag pin assembly from case as this can cause damage. When drag pin assembly is loosened, use hands and gently tap with plastic mallet to work assembly outboard and to remove from case studs.

6-143. CLEANING.

a. Clean away all residue of sealant from drag pin assembly and mounting area on bottom of case.

b. Clean drag pin assembly in cleaning solvent (item 12, table 1-1). Dry with filtered compressed air.

6-144. INSPECTION.

a. Visually inspect drag pin mounting for physical damage.

b. Visually inspect spherical bearing for security, freedom of movement and wear. If bearing wear exceeds 0.010 inch axial or 0.008 inch radial, replace bearing. (Refer to paragraph 6-145.)

c. Inspect drag pin assembly using Fluorescent Penetrant inspection. (Refer to Section I SPECIAL INSPECTION –ACCEPTANCE STANDARDS.)

d. Dimensionally inspect worn parts. (See figure 6-41.)

e. Replace damaged or worn drag pin assembly that is unserviceable.

6-145. REPLACEMENT — SPHERICAL BEARING.

a. Accomplishment of drag pin bearing replacement will require a press with at least a 2000 ± 100 pound rating.

b. If bearing replacement is necessary the items contained in table 6-4, will be required.

c. Using the mandrel end of mandrel (T101547-3) press the old bearing and sleeve into the receptacle portion of support (T101547-1.)

d. Clean all sealant residue from the bore of the housing using No. 400 grit abrasive paper (item 15, table 1-1).

e. Dimensionally check the bore of the housing. Maximum I.D. of bore should not exceed 1.132 inches.

f. Perform magnaflux inspection of housing for cracks.

g. Apply a coat of Loctite primer (item 85, table 1-1) to the sleeve, bearing outer race and bore of the housing. Wipe dry with a clean cloth.

h. Apply a second coat of Loctite primer to the surfaces described in subparagraph f. and allow to dry for 5 minutes.

i. Apply Loctite adhesive, grade AAV (15-10) (item 83, table 1-1) to the surfaces described in subparagraph f. Exercise care in order not to contaminate the bearing element.

Note

Staking procedure must be completed within 30 minutes of Loctite adhesive application.

Table 6-4. Drag Pin Bearing Replacement Items

NOMENCLATURE	PART NUMBER	MANUFACTURER
Replacement Bearing	TFA-108	Shafer Bearing Co. Dowers Grove, Ill.
Alternate Replacement Bearing	BSH-16-ATC32	Fafnir Bearing Co. Los Angeles, Calif.
Sleeve (Bushing)	206-031-513-1	Bell Helicopter Co. P.O. Box 482 Fort Worth, Texas
Loctite, Adhesive Primer	AAV(15-10) Grade N or T	American Sealant Co. Hartford, Conn.
Tool	T101547-1 T101547-3 T101547-5	Bell Helicopter Co. P.O. Box 482 Fort Worth, Texas

j. Install bearing and sleeve in housing. Using the staking side of stake tool (T101547-5) and the support portion of the support (T101547-1), stake the sleeve on each side alternately to a depth of 0.012 to 0.016 inch.

k. Adhesive curing time may be accelerated by heating the assembly to 175°F (80°C) for 1 hour after staking.

6-146. TRANSMISSION MAIN CASE ASSEMBLY.

6-147. DISASSEMBLY.

Note

Accessory drive bearing housing is a part of transmission case. (See figure 6-41, Note 1.)

a. Remove all transmission external parts. (Refer to paragraph 6-98 or 6-99.)

b. If oil level indicator (35, figure 6-31 or 40, figure 6-32) has not been removed previously, remove it now as follows:

(1) Remove retainer ring (38, figure 6-31 or 45, figure 6-32) and remove sight glass (37, figure 6-31 or 46, figure 6-32) with O-ring (36, figure 6-31 or 44, figure 6-32.)

(2) Remove oil level indicator.

Note

Use caution when prying sight glass out. Do not break the glass. If sight glass will not come out without incurring damage, postpone removal until complete transmission disassembly is accomplished. At this time sight glass and oil level indicator may be pushed out by pushing against back side of indicator.

c. Remove all components from transmission assembly. Do not remove special ground spacers, except to clean foreign matter from spacer grooves. (See figure 6-41, Notes 2 and 3.)

6-148. CLEANING.

a. Clean transmission case with cleaning solvent (item 12, **table 1-1**). Dry with filtered compressed air.

b. Strip all paint from main case by immersion in stripper (item 66, **table 1-1**.)

6-149. INSPECTION.

a. Visually inspect specially ground spacers for physical damage. To replace damaged or lost spacer ring obtain control dimension from transmission case. (See figure 6-41, Notes 2 and 3.)

b. Visually inspect all case studs for security and condition of threads.

c. Inspect case for nicks, burrs, scratches, cracks and worn places.

d. Visually inspect all openings, passages, grooves and all other areas to ensure case is thoroughly clean and free of metal chips and other foreign material.

e. Refer to Section I, SPECIAL INSPECTION – ACCEPTANCE STANDARDS, for Magnetic Particle or Fluorescent Penetrant Inspection Criteria.

f. Dimensionally inspect worn parts, using dimensions listed on Limits Chart. (See figure 6-41) and refer to paragraph 6-93h.)

6-150. REPAIR AND REPLACEMENT.

a. Replace loose or damaged studs. (Refer to paragraph 6-93g.)

b. Remove corrosion and repair transmission case if not previously accomplished. (Refer to paragraphs 6-94 and 6-95.)

c. Apply epoxy polyamide primer (item 56, **table 1-1**) to transmission case. (Refer to paragraph 6-165.)

6-151. TRANSMISSION – REASSEMBLY.

6-152. INSTALLATION – DRAG PIN ASSEMBLY.

a. Ensure that mounting base of drag pin assembly (28, figure 6-31 or 32, figure 6-32) and mounting area on transmission case is clean.

b. Apply sealing compound (item 115, **table 1-1**). Mix sealant according to directions on package, and apply a thin coat of sealant to mounting area.

c. Position drag pin assembly (28, figure 6-31 or 32, figure 6-32) over four mounting studs.

d. Install washers and nuts. Torque nuts to 50 to 70 inch-pounds and install cotter pins.

e. Apply sealant (item 115, **table 1-1**) to outer edge of drag pin assembly and mounting area of case.

f. After sealant dries trim with sharpened plastic scraper. Do not use metal scraper.

6-153. INSTALLATION, – ACCESSORY DRIVE SPIRAL BEVEL GEAR.

a. Remove accessory drive gear bearing housing (6, figure 6-41) from transmission case.

b. Place bearing housing (6) under a heat lamp.

c. Press double bearing (43, figure 6-33) into bearing housing.

d. Install retainer ring (44).

e. Use plate assembly (T101504) to support bearing (43) inner race and use hydraulic press to press accessory drive spiral bevel gear (45) into bearing, with bearing inner ring (44), next to gear.

f. Position lockring (42) on end of accessory drive spiral bevel gear (45), next to bearing (43).

g. Clamp plate assembly (T101504) in vise with four legs upright.

h. Position accessory drive spiral bevel gear (45) on plate assembly (T101504) with four legs positioned through hole in gear.

i. Install nut (41) on end of accessory drive spiral bevel gear (45) and with commercial spanner wrench torque to 250 to 300 inch-pounds. Bend two locking tangs of lockring (42) into slots in nut (41).

j. Position assembled accessory drive spiral bevel gear and bearing assembly, with cast numbers on bearing housing on upper side, in transmission case (22). Install two bolts and washers. Torque bolts to 50 to 70 inch-pounds and safety with 0.032 inch lockwire (item 19, **table 1-1**).

6-154. INSTALLATION – MAIN INPUT GEAR SHAFT AND SPIRAL BEVEL GEAR.

a. Install input pinion roller bearing (40, figure 6-33).

(1) Apply heat lamp to roller bearing mounting area of transmission case (22).

(2) Install roller bearing (40) while case is warm.

(3) Install retainer ring (39).

b. Install input gear shaft roller bearing (16).

(1) Apply heat lamp to transmission case (22).

(2) Install roller bearing (16) while case is warm, tap in with aluminum rod or drift.

(3) Install retainer ring (15) next to bearing (16).

c. Install duplex bearing (46) in case as follows:

(1) Position holding base (T101508-3) on top of case over case studs. Install nuts on studs using standard torque.

(2) Invert case and thoroughly heat area for duplex bearing (46).

(3) Position inverted case in hydraulic press and support on holding base (T101508-3).

(4) Make a pencil mark inside of bearing inner race in line with dull burrs on etch marks on edge of inner races.

(5) While case is thoroughly heated, install bearings (46) face to face, one at a time, with pencil marks on inner race in line. If bearings will not go in by hand, use plug (T101503) and hydraulic press to press bearings into place. Outer race of duplex bearing must seat firmly against specially ground spacer ring.

(6) Do not remove holding base (T101508-3), it will be used in next step.

d. Install gear shaft bearing outer nut (48) as follows:

(1) With holding base (T101508-3) installed on top of case, invert case and clamp base (T101508-3) in vise.

(2) Apply turbine oil (item 20, table 1-1) on threads on outer nut (48, figure 6-33) and install in case finger tight.

(3) Remove holding base (T101508-3) from transmission case.

e. Assemble main input gear shaft (12) and spiral bevel gear (14).

(1) Position bevel gear (14) on input gear shaft (12).

(2) Clamp splined adapter (T101508-7) in vise. Hold bevel gear (14) in place on input gear shaft (12) and position lower end of input gear shaft on splined adapter (T101508-7).

(3) Install 30 bolts (13) and torque to 120 to 160 inch-pounds. Safety bolts in pairs with 0.032 inch lockwire (item 19, **table 1-1**).

f. Lubricate duplex bearing seat and roller bearing inner race of gear shaft (12, figure 6-33) with a light film of turbine oil (item 20, **table 1-1**).

g. Position gear shaft (12, figure 6-33) through roller bearing (16) and start through duplex bearing (46).

h. Invert transmission case (22) and position in hydraulic press. Support top of input gear shaft (12) on block of thick masonite, micarta, wood, or aluminum. Position a pressing plate or cylinder on inner race of duplex bearing (46), and apply pressure against plate or cylinder, and bearing inner race. Exercise care to mesh teeth of spiral bevel gear (14) with teeth of accessory drive gear (45) by

All data on page 6-104A/6-104B deleted.

moving accessory drive gear back and forth to feel for meshing of teeth as spiral bevel gear is being pressed into place.

i. Apply thin coat of turbine oil (item 20, table 1-1) to threads on inner nut (47 or 56, figure 6-33) and install nut in end of input gear shaft (12) finger tight.

j. Install T101508 holding fixture set as follows: (See Section I.)

(1) Insert square end of T101508-7 adapter for 206-040-002-5, -13, -15, or -25 transmission or T102136 wrench assembly for 206-040-002-29 transmission into mating hole in T101508-3 holding base.

(2) Hold fixture set together and insert splined end of T101508-7 or T102136 wrench assembly into splines of input gear shaft (12, figure 6-33 , or 3, figure 6-40A) as applicable. Align T101508-3 bar assembly with four studs on main case (22, figure 6-33). Secure base assembly with washers and nuts. Torque nuts 100 to 140 inch-pounds.

k. Clamp holder (T101508-3) in vise. Position splined adapter (T101502) in inner nut (47 or 56). Use 1/2 inch square drive with torque wrench to torque nut (47 or 56) 150 to 225 foot-pounds. On 206-040-002-5, -13, -15, and -25 transmissions, line up tangs in inner nut (47) with splines in input gearshaft (12). On 206-040-002-29 transmission, line up holes in inner nut (56) with splines of input gear shaft (12) and install locking spring (55) into inner nut (56). Ensure that locking spring (55) engages splines of input gear shaft (12).

CAUTION

The tangs of the inner nut may be sheared off if not properly aligned with the splines in the gear shaft. Align back side of tang to just clear spline space.

l. Position wrench (T101501) on nut (48), hold wrench firmly in place and torque nut to 457 to 700 foot-pounds, and line up key slot in nut with key slot in case.

m. Remove T101508-7 adapter or T102136 wrench assembly and T101508-3 holding base from transmission.

6-155. DELETED.

6-156. INSTALLATION — MAIN INPUT PINION.

a. Visually check to determine that specially ground spacer rings are installed in groove. (See figure 6-41, Note 2.)

b. Reassemble input pinion (38, figure 6-33) and triplex bearing (37), if not previously assembled. (Refer to paragraph 6-136.)

c. Apply heat lamp to thoroughly heat transmission case in area of input triplex bearing (37, figure 6-33.)

d. Install base (T101507-3) on input face of transmission, and secure with nuts installed on all transmission case studs. Position threaded adapter (T101507-7) in the threaded end of input pinion shaft (38). Assemble (Owatonna pusher tool legs No. 927A) to installed base (T101507-7) installed on shaft. Assemble cross bar of (Owatonna tool No. 927) on adapter legs installed in base (T101507-3).

e. Apply thin coating of turbine oil (item 20) on triplex bearing (37) outer race.

f. While transmission case is thoroughly warm hold pusher screw with wrench and turn nut on screw to push assembled triplex bearing (37, figure 6-33) and pinion shaft (38) into transmission case (22).

Note

Do not hold nut and turn screw as this could rotate bearing outer races and result in triplex bearing being installed without proper line up of "V" mark on bearing outer races.

g. While pushing triplex bearing and shaft into transmission case move main input spiral bevel gear (14) to mesh teeth with main input pinion (38) as input pinion shaft is pressed into place in transmission case (22).

h. Seat input pinion triplex bearing (37) outer race against spacer shim. Remove base (T101507-3), threaded adapter (T101507-7), and Owatonna tool.

i. Check to determine proper thickness of shim (36). If input pinion triplex bearing (37) being installed is the same bearing set removed on disassembly, the original shim (36) could be correct. To check for proper clearance between face of transmission case and input bearing and seal housing (31) proceed as follows: (1) Position housing (31) against bearings. Check space between case (22) and housing (31) with feeler gage to determine clearance. (2) Peel shim as required to obtain clearance of 0.002 to 0.004 inch between case (22) and housing (31). When installation nuts are properly torqued, this will give required pinch on bearings.

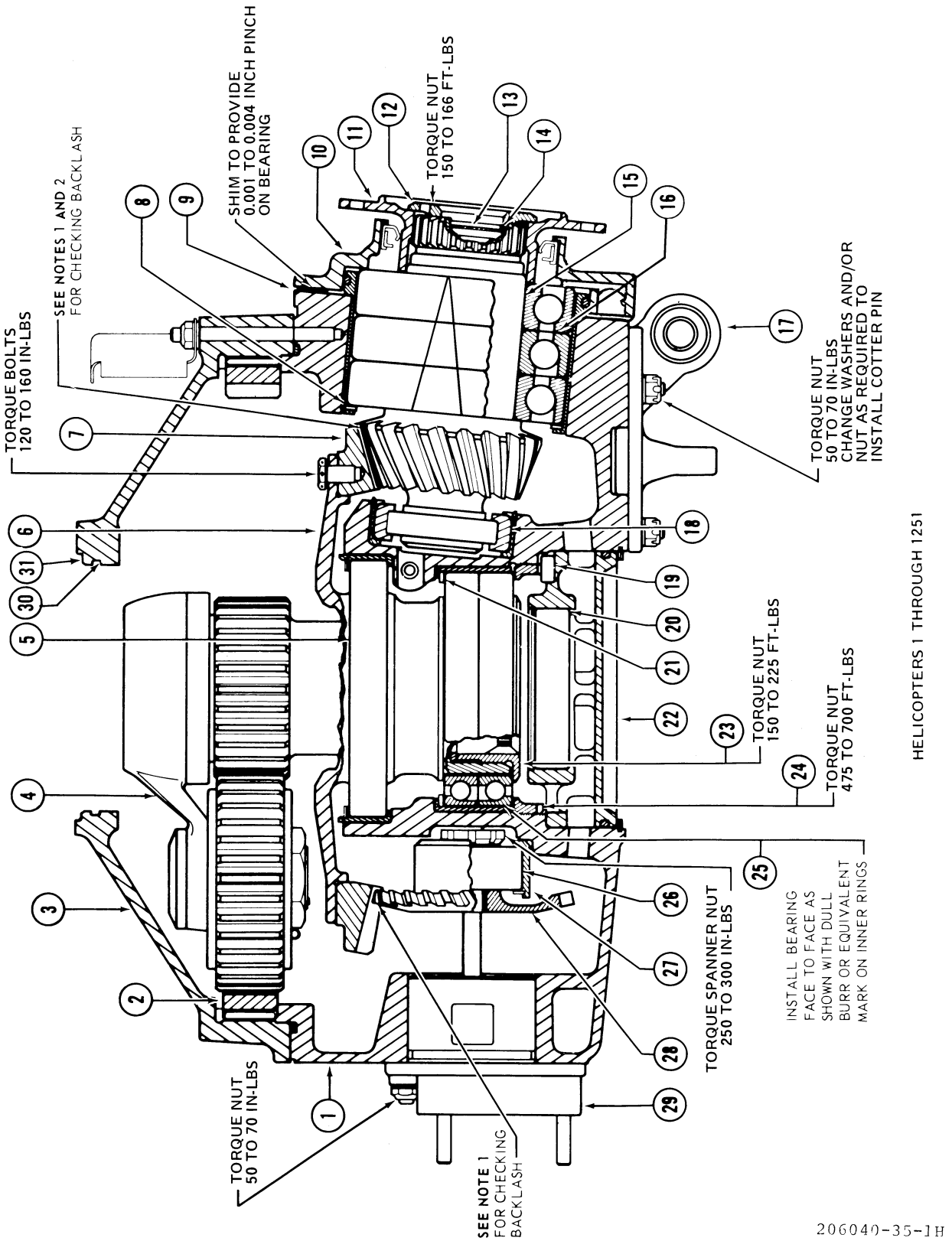

Figure 6-46. Transmission (206-040-002-5, -13 and -15) — Build-Up (Sheet 1 of 2)

1. Transmission Case
2. Ring Gear, Planetary
3. Top Case, Transmission
4. Planetary Assembly
5. Bearing, Main Input Gear Shaft Roller
6. Gear Shaft, Main Input
7. Spiral Bevel Gear, Main Input
8. Shim Plate, Input Pinion
9. Laminated Shim
10. Housing, Input Pinion Bearing and Seal
11. Adapter, Input Pinion
12. Nut
13. Cover, Pinion Nut
14. Lock Spring, Input Pinion Nut
15. Pinion Gear, Input
16. Triplex Bearing, Input Pinion
17. Drag Pin Assembly
18. Bearing, Input Pinion Roller
19. Key
20. Bearing, Main Rotor Lower Mast
21. Shim Plate, Main Input Spiral Bevel Gear
22. Support Assembly, Lower Mast Bearing
23. Nut, Gear Shaft Bearing Inner
24. Nut, Gear Shaft Bearing Outer
25. Duplex Bearing, Input Gear Shaft
26. Double Row Bearing, Accessory Drive
27. Bearing Housing, Accessory Drive
28. Gear, Spiral Bevel Accessory Drive
29. Oil Pump
30. Groove for Lubrication
31. Recess for O-Ring

NOTE

1. Backlash of main input spiral bevel gear (item 7) with accessory drive bevel gear (item 28) to be 0.008 inch to 0.015 inch. Backlash on any one pair of gears must not vary more than 0.002 inch when checked at three equally spaced points.

2. Backlash of main input spiral bevel gear (item 7) with main input pinion (item 15) to be 0.005 to 0.011 inch with tools (T101509-11). Backlash on any one pair of gears must not vary more than 0.002 inch when checked at three equally spaced points.

206040-35-2G

Figure 6-46. Transmission (206-040-002-5, -13 and -15) — Build-Up (Sheet 2 of 2)

j. Remove bearing and seal housing (31) from input face of transmission case.

k. Position prepared shim (36) over mounting studs on input mounting face of case. (Refer to subparagraph i.)

l. Install new O-ring (35) in groove on outer edge of bearing liner.

m. Install new O-rings on oil drain tube (32). Apply thin coating of Ultrachem Assembly Fluid (item 133) to O-rings and insert one end of tube into hole in input mounting face on transmission case (22).

n. Install lip type seal (33) as follows:

(1) Install retainer ring (34) and press new seal (33) into bearing and seal housing (31).

Note

Sealant (item 8) is required between the seal (33, figure 6-33) and the housing (31).

(2) Position bearing and seal housing (31, figure 6-33) on mounting studs on input face of case. Guide outboard end of oil drain tube (32) into mating hole in bearing and seal housing (31).

(3) Install aluminum washers (29) next to bearing and seal housing (31) followed by steel washers (28) and stud nuts (27). Torque nuts to 50 to 70 inch-pounds.

(4) Apply sealing compound (item 115) to outer edge of mating area of housing (31, figure 6-33) and input face of case. After sealant is dry trim with sharpened plastic scraper. Do not use metal scraper.

(5) Apply thin coating of turbine oil (item 20) to packing (30, figure 6-33) and insert in groove on input pinion (38).

(6) Apply a thin coating of turbine oil item 20) and position adapter (26) on end of input pinion shaft (38) and through seal (33) in bearing and seal housing (31).

(7) Install input pinion nut (25) in end of shaft (38).

o. Install magnetic carbon seal (33A) as follows:

Note

Magnetic carbon seal (33A) is a magnetic carbon face type seal consisting of four parts. The parts are a magnet ring, a seal case with carbon ring, and two O-rings. Seal should remain in packaging until ready for installation.

A transmission with 206-040-052-5 housing assembly can be modified by Technical Bulletin 206-79-23.

CAUTION

Do not place magnet ring portion of seal in area where small metal chips could be attracted by the magnet.

Note

No proseal should be used to install magnetic carbon seal and housing.

(1) Holding magnetic ring(3, figure 6-46A) by the OD, lubricate O-ring (2) using small amount of the Ultrachem Assembly Fluid #1 (item 133) supplied with the magnetic seal. Avoid touching highly polished surface. Lubricate housing bore with the same lubricant. Wipe off all excess.

(2) Position the magnet ring (3) into the seal bore of the housing assembly (1) with the unmarked and highly polished surface (mating face) visible.

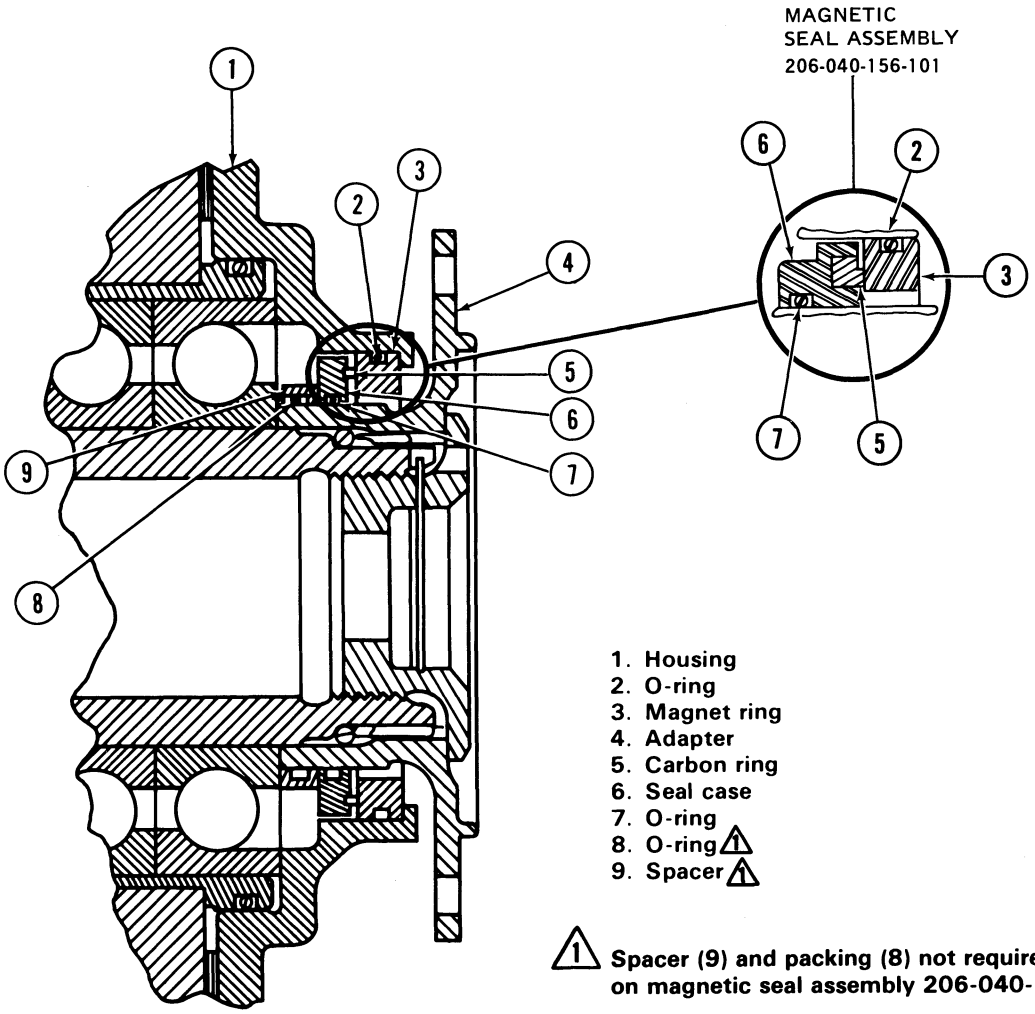

1. Housing
2. O-ring
3. Magnet ring
4. Adapter
5. Carbon ring
6. Seal case
7. O-ring
8. O-ring ⚠1
9. Spacer ⚠1

⚠1 Spacer (9) and packing (8) not required on magnetic seal assembly 206-040-156-101.

206900-468

Figure 6-46A. Main input quill magnetic carbon seal installation (transmission 206-040-002-25 and -29)

Cover the highly polished surface with a clean lint free towel and hand press the magnet ring squarely into the bore of the housing assembly and against the shoulder.

CAUTION

The magnet ring is hard and brittle. Application of other than hand pressure can cause cracks which will render the seal unusable.

(3) Place adapter (4) seal diameter through magnet ring and housing assembly. Place this assembly on work bench with adapter (4) down.

Note

Adapter (4) shall not have 29810-8003 wear sleeve installed. See figure 6-46C for adapter corrosion and repair limits.

(4) Holding seal case (6) by the OD, lubricate the O-ring (7) using a small amount of Ultrachem Assembly Fluid #1 (item 133). Lubricate mating diameter of adapter (4) and input pinion O-ring with the same lubricant.

(5) Carefully place seal case (6) over adapter (4) with carbon ring (5) adjacent to magnet ring (3) and hand press seal case (6) into contact with magnet ring (3).

(6) Lubricate O-ring (8) with Ultrachem Assembly Fluid No. 1 (item 133) and place in spacer (9).

(7) Hand press spacer (9) down over adapter (4) to contact seal case (6).

(8) Apply thin coating of turbine oil (item 20) to packing (30, figure 6-33) and insert in groove on input pinion (38).

Note

Check for proper sealing by pouring a small amount of turbine oil (item 20) into the seal housing to ensure that it does not leak past the seal. If leakage past the seal occurs, then positive contact has not been achieved between the seal mating faces and/or O-ring damage has occurred.

CAUTION

The adapter and housing assembly must be kept intact as shown in figure 6-46B until installed on main input quill. Failure to follow the prescribed assembly sequence exactly will very likely cause seal faces to separate resulting in leakage.

(9) Place housing (1, figure 6-46A), adapter (4), magnetic carbon seal and spacer group onto the transmission. Hand press the adapter (4) onto the input pinion spline (while simultaneously lining up the housing holes on case studs) until it bottoms. Install nut (25, figure 6-33) and hand tighten.

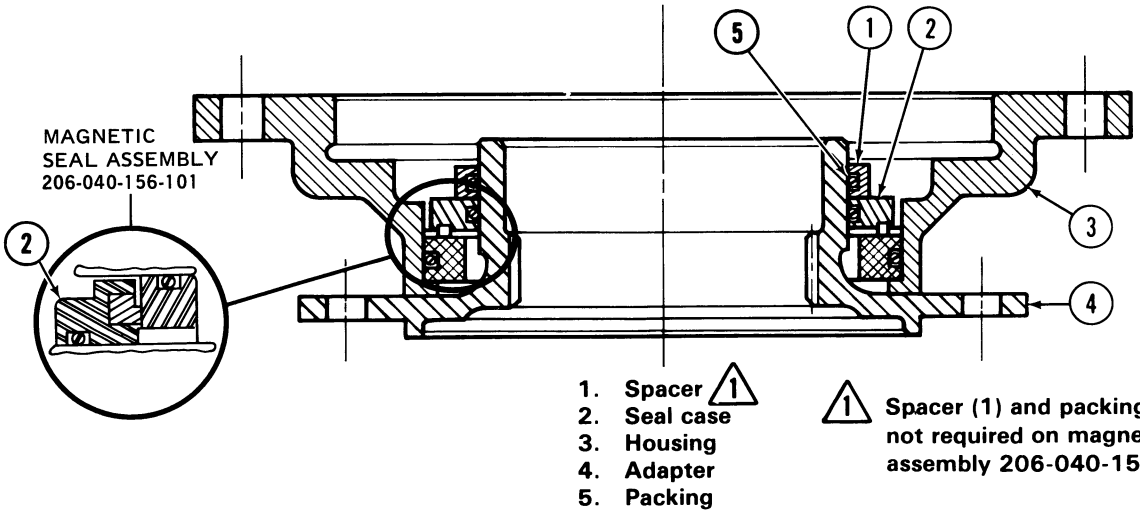

Figure 6-46B. Adapter and Housing Assembly

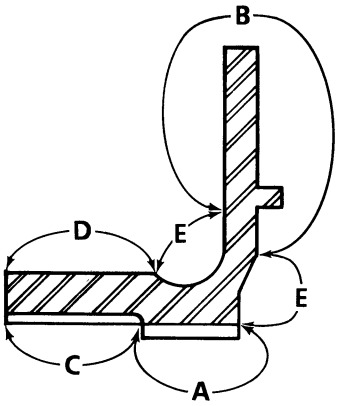

AREA A - Maximum depth of pitting shall not exceed 0.010 inch and no more than 50% of any tooth can be affected. All teeth may be affected within the above limits. Repair is limited to removal of corrosion by wire brush, steel wool or scotchbrite and treatment with alcoholic phosphoric solution.

AREA B - Except in areas of bolt holes, repair corrosion or damage to a max. depth of 0.010 inches. In areas 0.40 inch radius from center of bolt hole, corrosion pits are acceptable to 0.010 inch depth if no more than 40 percent of area is affected. Repair in these areas is limited to removal of corrosion by wire brush, steel wool or scotchbrite and treatment with alcoholic phosphoric solution. Touch up bare reworked areas with brush cadmium plate.

AREA C - Remove corrosion by honing to 2.195 inches maximum diameter.

AREA D - Remove corrosion by honing to 2.497 inches minimum diameter. Brush cad plate reworked area.

AREA E - Damage repair is allowed to 0.005 inch depth and three 1.0 inch long ARC lengths with 1.0 inch minimum separation. Reworked areas must be blended smooth. Touch up reworked areas with brush cadmium plate.

206040-441

Figure 6-46C. Corrosion Repair and Damage Limits — (206-040-048) Adapter

p. Position locally manufactured holding tool or wrench (T101555) on face of adapter (26) with holding pins of tool engaged in two holes in flange of adapter (26). (See figure 1-13 .) Position a ¾ inch square drive into end of nut (25, figure 6-33), hold adapter (26) with holding tool and torque nut (25) to 150 to 166 foot-pounds.

q. Remove square drive from nut (25) and remove holding tool wrench (T101555) from adapter (26). Install aluminum washers (29) next to housing (31) followed by steel washers (28) and stud nuts (27).

r. Torque stud nuts (27) 50 to 70 inch-pounds, at this time, if magnetic seal (33A) is installed.

s. Install cover (24) in end of input shaft nut (25). Install locking spring (23) in nut with locking end of spring through hole in nut and hole in shaft.

t. Apply sealing compound (item 115) to outer edge of mating area of housing (31, figure 6-33) and input face of case. After sealant is dry trim with sharpened plastic scraper. Do not use metal scraper.

6-157. CHECKING BACKLASH — MAIN INPUT PINION AND ACCESSORY GEAR TO INPUT BEVEL GEAR.

TOOLS REQUIRED

T101508	Transmission Holding Fixture Set
T101509	Backlash Tool Set
T101735	Backlash Tool Set — Accessory Gear

a. Check backlash of main input pinion and accessory gear to input bevel gear as follows:

(1) Assemble T101509 backlash tool set (2, figure 6-47) and T101508-3 bar (4).

(2) Position bar (4) across top of transmission, with expanding sleeve (5) inside of main input gear shaft (1). Install nuts on transmission case studs to secure bar (4) in place and turn nut (3) to spread expanding sleeve (5) to hold input bevel gear (11) and main input gear shaft (1).

(3) Install indicator block (10) in two of four installation holes in flange of input adapter (12).

(4) Insert T101735 backlash tool set (8) into case and accessory gear (6). Mount dial indicator on case and position point of indicator against indicator mark on indicator block (10).

(5) Rotate adapter (12) to obtain contact of teeth of input pinion (13) and input bevel gear (11). Note position of hand on dial indicator. Rotate input adapter (12) in opposite direction to obtain contact of opposite side of teeth of both gears. Amount of free travel between contact of gear teeth, should indicate 0.005 to 0.011 inch using above tool.

(6) Move dial indicator mount to case stud close to T101735 backlash tool set (8) and place tip of indicator on pin in arm of tool (8). Lock backlash tool to accessory drive spiral bevel gear (6) by tightening knob (7).

(7) Rotate backlash tool (8) as described above to obtain backlash. Backlash should be 0.008 to 0.015 inch using above tool.

(8) Repeat the backlash checks at two more places by rotating main input gear shaft (1) 120 degrees each time. Remove backlash tools. Backlash in any one pair of gears must not vary more than 0.002 inch when checked at three places. (See figure 6-46 , notes 1 and 2.)

Note

When backlash is not within tolerance, parts have been incorrectly assembled, or a part or parts are not within allowable tolerance.

(9) Remove tools from input adapter (12) and main case and accessory drive spiral bevel gear (6), then complete transmission reassembly procedures. (Refer to paragraph 6-158 .)

6-158. INSTALLATION — LOWER MAST BEARING AND SUPPORT.

a. Apply heat to mast bearing support (51, figure 6-33).

b. Install roller bearing (50) in support (51).

c. Install retainer ring (49) in support (51).

d. Install new O-ring (53) in groove in outer edge of support (51).

e. Lubricate O-ring (53) lightly with turbine oil (item 20) then apply coating of grade 2 corrosion preventive compound (item 24) to outside diameter of support, not to exceed height of lower O-ring groove.

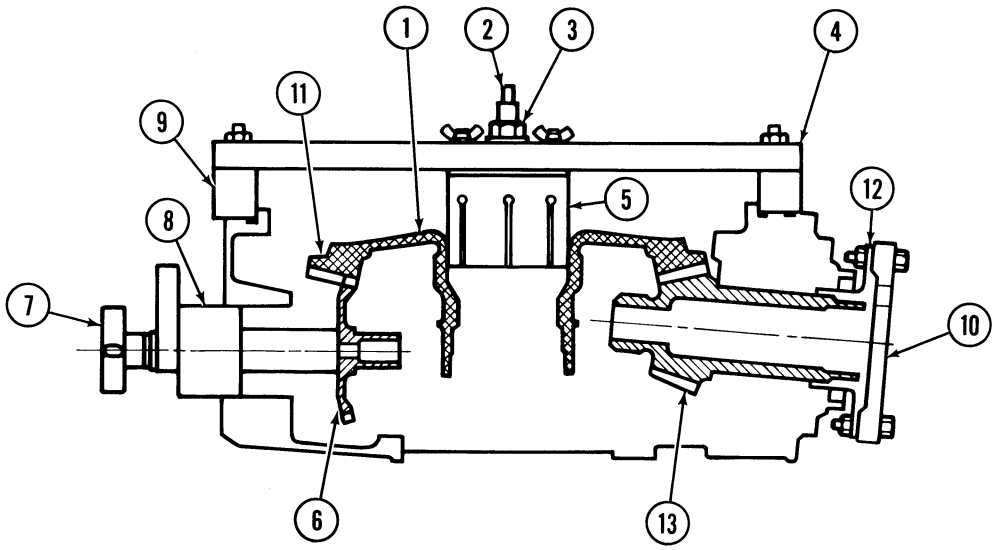

1. Main input gear shaft
2. T101509 backlash tool set
3. Nut
4. T101508-3 bar assembly
5. Expanding sleeve
6. Accessory drive spiral bevel gear
7. Knob
8. T101735 backlash tool set
9. Leg
10. T101509-11 indicator block
11. Input bevel gear
12. Input adapter
13. Input pinion

214040-601A

Figure 6-47. Accessory Drive Spiral Bevel Gear Backlash Tools

CAUTION

Ensure bearing support is P/N 206-040-152. Look alike part will fit physically but is not functionally interchangeable.

Note

To ensure key (52) remains in lower mast bearing support slot during installation, key may be bonded as follows:

(1) Clean key (52) and slot in lower mast bearing support (51) with cloth dampened with MEK (item 17).
(2) Bond key to slot in support with adhesive (item 31).
(3) Cure for 24 hours at 70° to 90°F (21° to 32°C) (full cure 5 to 7 days), or for 60 minutes at 170° to 195°F (77° to 88°C).

f. Position key (52, figure 6-33) in key slot in support (51). Make a pencil mark on support (51) and on transmission case (22) to indicate center of key.

g. Push support (51) into lower part of transmission case (22); line up key (52) with key slot in transmission case and duplex outer bearing nut (48).

h. Install retainer ring (54) in groove in bottom of transmission case (22), next to support (51).

6-159. INSTALLATION — PLANETARY (206-040-006 AND 206-040-010) ASSEMBLY.

a. 206-040-122 Sun Gear.

(1) Lubricate splines and gear teeth lightly with turbine oil (item 20).

(2) Position lower end of sun gear in upper part of input gear shaft (12, figure 6-33). Install thrust bearing (8, figure 6-36). Line up gear teeth and lower planetary assembly (11) into place.

(3) Cut lockwire and remove from bearing assemblies and spider (206-040-006 planetary

only). Exercise care to prevent any piece of lockwire remaining in transmission.

b. 206-040-562. Sun Gear.

(1) Install packings (59 and 60, figure 6-33) on sun gear.

(2) Pack area between two packings as noted on figure 6-40A with lubricant (item 22).

(3) Install sun gear (57) into shaft until upper packing just touches the chamfer at top of shaft (12).

(4) Support lower end of shaft in an arbor press or equivalent. Using a soft aluminum plate press down slowly on the sun gear allowing excess grease to flow through vent holes to the inside of sun gear. Hold the pressure until grease stops venting, wipe off vented grease from inside of sun gear.

(5) Check dimension from lower end of sun gear teeth to the top of shaft. If this dimension exceeds 0.526 inch the sun gear is not fully seated. (See figure 6-40A.)

(6) Apply film of turbine oil (item 20) to planetary assembly (58) and thrust bearing (9, figure 6-37 . Line up planetary pinion gear teeth with sun gear (57, figure 6-33), and lower planetary assembly onto sun gear.

6-160. INSTALLATION — TOP CASE.

a. Install pylon support spindles (39, figure 6-31 or 47, figure 6-32) on top case as follows:

(1) Ensure that mounting areas, on support spindles and transmission top case, are clean.

(2) Apply sealing compound (item 86) to mounting areas. Mix compound according to directions on package. Apply thin coat of sealant to mounting areas.

(3) Position pylon support spindle on four mounting studs on top case.

(4) Install washer and nuts. Torque nuts to 160 to 190 inch-pounds.

(5) Apply sealing compound (item 86) to outer edge of installed support spindles and to top case at mating area.

(6) Trim dry sealant with sharpened plastic scraper. Do not use metal scraper.

b. Install spacer ring (3 figure 6-33) in groove in top of top case (2).

c. Apply a light coating of turbine oil (item 20) to teeth and sides of planetary ring gear (4, figure 6-33).

d. Install new O-ring (5) in groove in top of transmission main case (22).

e. Install new O-rings (6) on oil transfer tube (7) and insert one end of tube in hole in top of transmission main case (22).

f. Apply unreduced zinc chromate primer (item 80) to base of main case studs. Apply corrosion preventive compound (item 24) to the outside diameter of the guide rim and adjacent surfaces outboard. Position ring gear (4) over planetary assembly (11) and then onto the transmission main case (22). Position top case (2) over transmission case studs. Carefully lower the transmission top case over the ring gear and rotate the ring gear to align the splines.

g. Install Stat-O-Seals (8) on case studs next to top case and washers (9). Apply unreduced zinc chromate primer (item 80) to case studs and washers (9, figure 6-33), then install and torque nuts (10).

h. Apply sealant compound, (item 86) on outer edge of top case and transmission case to seal mating area. When sealant is dry, trim excess material using sharpened plastic scraper. Do not use metal scraper.

6-161. INSTALLATION – OIL PUMP.

a. Install new O-ring (17, figure 6-33) on oil pump (18).

b. Lightly lubricate O-ring and spline teeth of oil pump drive shaft with turbine oil (item 20).

c. Apply heat lamp to transmission case (22, figure 6-33).

d. Install oil pump (18).

e. Install aluminum washers (19) next to pump, steel washers (20) next, and then install nuts (21). Apply standard torque.

f. Apply sealant compound (item 86), on outer edge of oil pump (18, figure 6-33) and mating area

on transmission case (22). When sealant is dry, trim excess material with sharpened plastic scraper.

6-162. INSTALLATION – OIL JETS, OIL STRAINER, OIL SIGHT GLASS, AND DRAIN PLUGS OR CHIP DETECTORS.

CAUTION

Do not interchange oil jets between transmissions. Only the (206-040-002-5 and -15) transmissions contain oil jets of the same part number.

Note

Lubricate all O-rings and packings prior to installation with turbine oil (item 20, table 1-1).

a. Install No. 1 oil jet (18, figure 6-31 or 21, figure 6-32) in transmission lower case and No. 2 oil jet (10, figure 6-31 or 16, figure 6-32) as follows:

(1) Position four new O-rings on the No. 1 and No. 2 oil jets.

(2) Insert No. 1 oil jet into transmission lower case and secure with screw.

(3) Insert No. 2 oil jet into transmission top case and secure with screw.

(4) Install new Dyna-Seal and screw in opening of each jet.

(5) Safety screws with 0.032 inch lockwire (item 19, **table 1-1**).

b. Install oil strainer assembly (30, figure 6-31 or 37, figure 6-32) as follows:

(1) Install new O-ring (32, figure 6-31 or 39, figure 6-32) on strainer assembly.

(2) Insert strainer assembly in transmission lower case and secure with retainer ring (31, figure 6-31 or 38, figure 6-32).

c. Install oil level indicator (35, figure 6-31 or 40, figure 6-32) as follows:

(1) Insert oil lever indicator in transmission lower case.

(2) Install new O-ring (36, figure 6-31 or 44, figure 6-32) on sight glass (37, figure 6-31 or 46, figure 6-32). Insert sight glass in transmission lower case and secure with retainer ring (38, figure 6-31 or 45, figure 6-32).

d. On transmissions (206-040-002-5) install drain plug (33, figure 6-31) as follows:

(1) Position new O-ring (34, figure 6-31) on drain plug and install in transmission lower case below oil level indicators (35).

Note

Service Letter 206-133 provides instruction for installation of electrical chip detector (B-3228).

(2) Torque drain plug or chip detector to 75 to 125 inch-pounds. Safety to transmission case with 0.032 inch lockwire (item 19, table 1-1).

e. On transmission (206-040-002-15) install magnetic drain plugs (42 and 43, figure 6-31) as follows:

(1) Position new O-rings (43 and 45) on magnetic drain plugs and install in transmission lower case.

Note

Service Letter 206-133 provides instructions for installation of electrical chip detectors (B-3188B and B-3182B). (See figure 6-32, items 36 and 42.)

(2) Torque magnetic drain plugs or electrical chip detectors to 75 to 100 inch-pounds. Safety to transmission case with 0.032 inch lockwire (item 19, **table 1-1**).

f. On transmissions (206-040-002-13) install magnetic drain plugs (35 and 41, figure 6-32) as follows:

(1) Position new O-rings (34 and 43) on magnetic drain plugs and install in transmission lower case.

Note

Service Letter 206-133 provides instructions for installation of electrical chip detectors (B-3188B and B-3182B). (See figure 6-32, items 26 and 42.)

(2) Torque magnetic drain plugs or electrical chip detectors to 75 to 100 inch-pounds. Safety to transmission case with 0.032 inch lockwire (item 19, **table 1-1**).

g. On transmissions (206-040-002-25) install electric chip detectors (36 and 42, figure 6-32) as follows:

(1) Position new O-rings (48 and 49, figure 6-32) on electrical chip detectors and install in transmission lower case.

(2) Torque electric chip detector plug (36) to 100 to 175 inch-pounds and plug (42) to 150 to 250 inch-pounds. Safety to transmission case with 0.032 inch lockwire (item 19, **table 1-1**).

6-163. INSTALLATION – TRANSMISSION (206-040-002-5 AND -15) EXTERNAL COMPONENTS.

a. Install Stat-O-Seals (40, figure 6-31) on case studs followed by adapter (41) on first case stud aft of right pylon support spindle (39). Install washer and nut.

b. Install oil cooler (1) as follows:

(1) Install support brackets (9) and clip (8) on transmission.

(a) Remove nut and washer from first case stud aft of oil jet (10) in top case. Install Stat-O-Seal (40) next to top case, with support bracket (9) installed over Stat-O-Seal. Install washer next to bracket and then install nut.

(b) Position clip (8) on pad on top case and install with washer and bolt.

(2) Position oil cooler (1) on top of transmission; line up with installed clip (8) and bracket (9) and install with washer and bolt at clip and at bracket. Shim between oil cooler (1) and bracket (9) with washers as required.

c. Install O-rings (5) on oil transfer tube bolts (6). Insert bolts into oil transfer tube (4) and install gasket (3) next to oil transfer tube and install O-rings (2). Position oil transfer tube to oil cooler (1) and top case of transmission. Torque bolts (6) to 100 to 200 inch-pounds. Safety bolt heads together by wrapping lockwire around oil transfer tube; use 0.032 lockwire (item 19, **table 1-1**).

d. Assemble oil filter as follows:

(1) Install oil bypass valve (23, figure 6-31): Position O-ring on retainer. Insert valve and spring in oil filter head (20) and install retainer.

(2) Position O-ring on thermoswitch (22) and install in oil filter head (20).

(3) Position O–ring on temperature bulb (21) and install in oil filter head (20).

(4) Safety through head of bypass valve (23) retainer, thermoswitch (22) and temperature bulb with 0.032 inch lockwire (item 19, table 1-1).

(5) Install union (26, figure 6-31) with O-ring in oil filter head (20).

e. Install oil filter head (20) and oil filter assembly (19) as follows:

(1) Position gasket (24) over three mounting studs on transmission case. Position oil filter head (20) over studs, next to gasket (24). Install aluminum washers next to filter head, followed by steel washers, and nuts. Apply standard torque.

(2) Install filter assembly (19) on oil filter head (20) and secure with clamp (27).

f. Install tube assembly (7) to union on oil cooler (1) and to union (26) on oil filter head (20).

g. Position O-rings (12 and 13) on oil pressure regulating valve (11) and carefully install into transmission case to prevent damage to O-rings. Torque valve to 200 to 300 inch-pounds. Safety valve to lower oil transfer tube bolt (6) with 0.032 inch lockwire (item 19, table 1-1). (Refer to paragraph 6-12 for regulating oil pressure.)

h. Install O-ring (15, figure 6-31) and reducer/filter (14).

i. Install O-ring (16) and union (17).

j. Paint main transmission. (Refer to paragraph 6-165.)

k. Install main rotor mast assembly. (Refer to paragraph 6-30.)

6-164. INSTALLATION — TRANSMISSION (206-040-002-13, -25, and -29) EXTERNAL COMPONENTS.

a. Install Stat-O-Seal (10, figure 6-32) on case stud followed by adapter (9) on second case stud forward of right pylon support spindle (47). Install washer and nut.

b. Install Stat-O-Seal (10) on case stud followed by bracket (11) on first case stud forward of right pylon support spindle (47). Install washer and nut.

c. Install oil cooler (1) as follows:

(1) Install support bracket (12) and clip (8) on transmission.

(a) Remove nut and washer from first case stud aft of oil jet (16) in top case. Install Stat-O-Seal next to top case, with support bracket (12) installed over Stat-O-Seal. Install washer next to bracket and then install nut.

(b) Position clip (8) on pad on top case and install with washer and bolt.

(2) Position oil cooler (1) on top of transmission; line up with installed clip (8) and bracket (12) and install with washer and bolt at both clip and bracket. Shim between oil cooler (1) and bracket (12) with washers as required.

d. Install O-rings (5) on oil transfer tube bolts (6). Insert bolts into oil transfer tube (4), and install gaskets (3) (next to oil transfer tube) and O-rings (2). Position oil transfer tube to oil cooler (1) and top case of transmission. Torque bolts (6) to 100 to 200 inch-pounds. Safety bolt heads together by wrapping lockwire around oil transfer tube; use 0.032 inch lockwire (item 19, **table 1-1**).

e. Assemble oil filter as follows:

(1) Install oil bypass valve (30). Position O-ring on retainer. Insert valve and spring in oil filter head (26) and install retainer.

(2) Position O-ring on thermoswitch (31) and install in oil filter head (26).

(3) Position O-ring on temperature bulb (28) and install in oil filter head (26).

(4) Safety through head of oil bypass valve (30), thermoswitch (31) and temperature bulb (28) with 0.032 inch lockwire (item 19, table 1-1).

(5) Install union (24, figure 6-32) with O-ring in oil filter head (26).

f. Install oil filter head (26) and oil filter housing (25) as follows:

(1) Position gasket (22) over three mounting studs on transmission case. Position oil filter head (26) over studs, next to gasket (22). Install aluminum washers next to filter head, followed by steel washers, and nuts. Tighten nuts to standard torque.

(2) Install oil filter housing (25) on oil filter head (26) and secure with two aluminum washers and two steel washers and nuts. Tighten nuts to a torque of 100 to 140 inch-pounds.

g. Install tube assembly (7) to union on oil cooler (1) and to union (24) on oil filter head (26).

h. Position two O-rings (13 and 14) on oil pressure regulating valve (15) and carefully install in transmission case to prevent damage to O-rings. Torque valve to 200 to 300 inch-pounds. Safety valve to lower oil transfer tube bolt (6) with 0.032 inch lockwire (item 19, table 1-1). (Refer to paragraph 6-12 for regulating oil pressure.)

i. Install O-ring (18, figure 6-32 and reducer/filter (17).

j. Install O-ring (19) and union (20).

k. Paint main transmission. (Refer to paragraph 6-165.)

l. Install main rotor mast assembly. (Refer to paragraph 6-30.)

m. Install main transmission assembly. (Refer to paragraphs 6-25 or 6-26.)

6-165. PAINTING – MAIN TRANSMISSION.

a. Touch up all exposed magnesium surfaces with touch-up solution. (Refer to paragraph 6-95b.)

b. Apply sealant (item 86, table 1-1) to outer edge of mating surfaces in the following areas:

(1) Support spindles to top case.

(2) Drag pin assembly to bottom of lower case.

(3) Input pinion bearing seal cap to transmission case.

(4) Oil pump to main transmission case.

(5) Transmission top case to main case.

c. Mask sections of transmission not requiring painting with masking tape (item 75, table 1-1). (See figure 6-48) Cap or plug all external fittings and lines.

d. Prime and paint transmission in accordance with table 6-5.

e. For long term storage, refer to Section 1 of manual for requirements.

Table 6-5. Transmission Painting Requirements

ITEM NAME	PAINT TYPE AND SPECIFICATION	METHOD OF APPLICATION	NO. OF COATS	NOTES
Transmission Case	Polyamide Epoxy Primer Coating (Two Part Kit)	Spray	1	Minimum thickness 0.4 mil after drying
	Acrylic Lacquer, P-95 Color No. 17178 (Aluminum)	Spray	2	
Filler Cap	Acrylic Lacquer, P-95 Color No. 13538 (Orange-Yellow)	Spray	2	

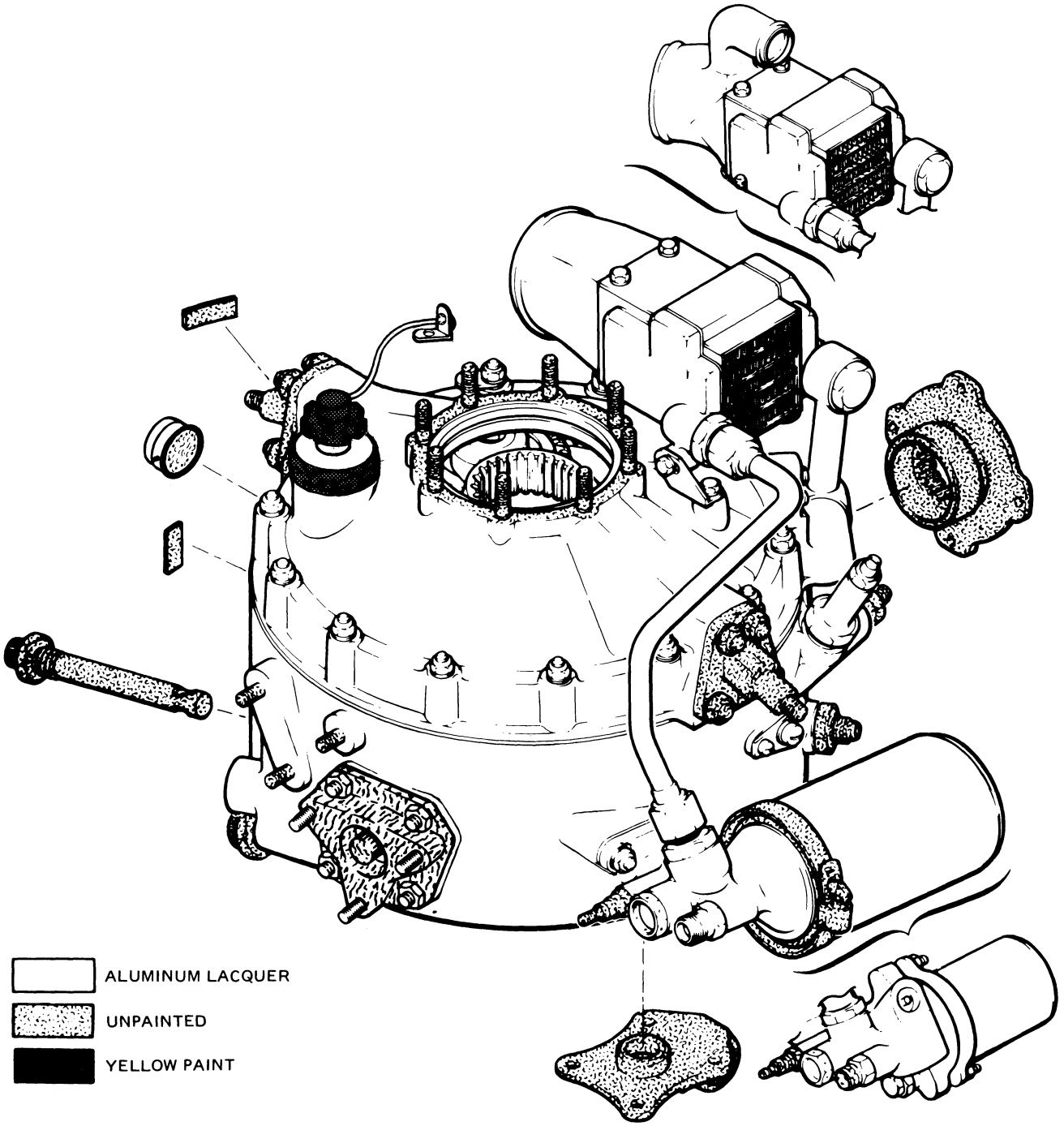

206040-389

Figure 6-48. Main Transmission – Painting

6-166. TRANSMISSION ISOLATION MOUNT OVERHAUL. (206-030-539-3.)

Note

Remove transmission isolation mount assembly. (Refer to paragraph 6-37 .)

6-167. DISASSEMBLY ISOLATION MOUNT (206-030-539-3).

CAUTION

Do not intermix components from one mount with those of another.

a. Remove top boot (1, figure 6-49) from mounting (13). Avoid cutting or tearing of the boot.

b. Remove bottom plate (2) by prying away from mounting (13). Remove uniformly to avoid bending the plate.

c. Remove cotter pins (4), nuts (5), washers (6) and bolts (7). It will be necessary to loosen the nuts (5), alternately, a turn at a time, because of mounting pre-compression.

d. Remove two nylok screws (3) from the top of the mounting sandwich (9), then separate the sandwich mountings (9 and 10) from mounting (13). Exercise care when removing these center sandwiches in order not to damage the sandwich metal.

e. It will not be necessary to remove spacers (8) from the center sandwich mounting (10).

f. If necessary to remove front boot (12), remove screws (11).

6-168. CLEANING ISOLATION MOUNT (206-030-539-3). Wipe oil and dirt from bonded rubber parts using a clean dry cloth. Wash unbonded metal parts in cleaning solvent (item 12, **table 1-1**) or equivalent.

6-169. INSPECTION ISOLATION MOUNT (206-030-599-3). Inspect disassembled parts of the mount as outlined in table 6-6 . Table 6-6 lists the individual components for a precise inspection of each part. Due to the construction of the mount and the method of installation, if any of these bonded parts are not within specifications as indicated in the table the entire transmission isolation mount must be replaced. (See figure 6-49 .)

6-170. REASSEMBLY. ISOLATION MOUNT (206-030-539-3).

a. Press center bonded sandwich (9, figure 6-49) into position on bonded mounting (13). Make certain boss of sandwich is seated in hole of the bonded mounting.

b. Preassemble spacers (8) to center bonded sandwich (10) and secure with new nylok screws (3). Press sandwich into position on bonded mounting, making certain its boss is seated in hole of the bonded mounting, then secure sandwiches together by installing two new nylok screws (3) through center bonded sandwich (9).

c. Install bolts (7) through bonded mounting and center bonded sandwiches and secure with washers (6) and nuts (5). Tighten nuts alternately to maintain parallel compression of bonded elements. Tighten nuts to a torque of 100 to 140 inch-pounds and secure with cotter pins (4).

d. Cement bottom plate (2) to bonded mounting (13) using adhesive (item 88, **table 1-1**) or equivalent. Make certain holes are aligned.

e. Snap the top boot (1, figure 6-49) in place.

f. If bonded mounting requires the use of two washers (14), cement in place using adhesive (item 88, table 1-1) or equivalent.

g. Install transmission isolation mount assembly. (Refer to paragraph 6-39.)

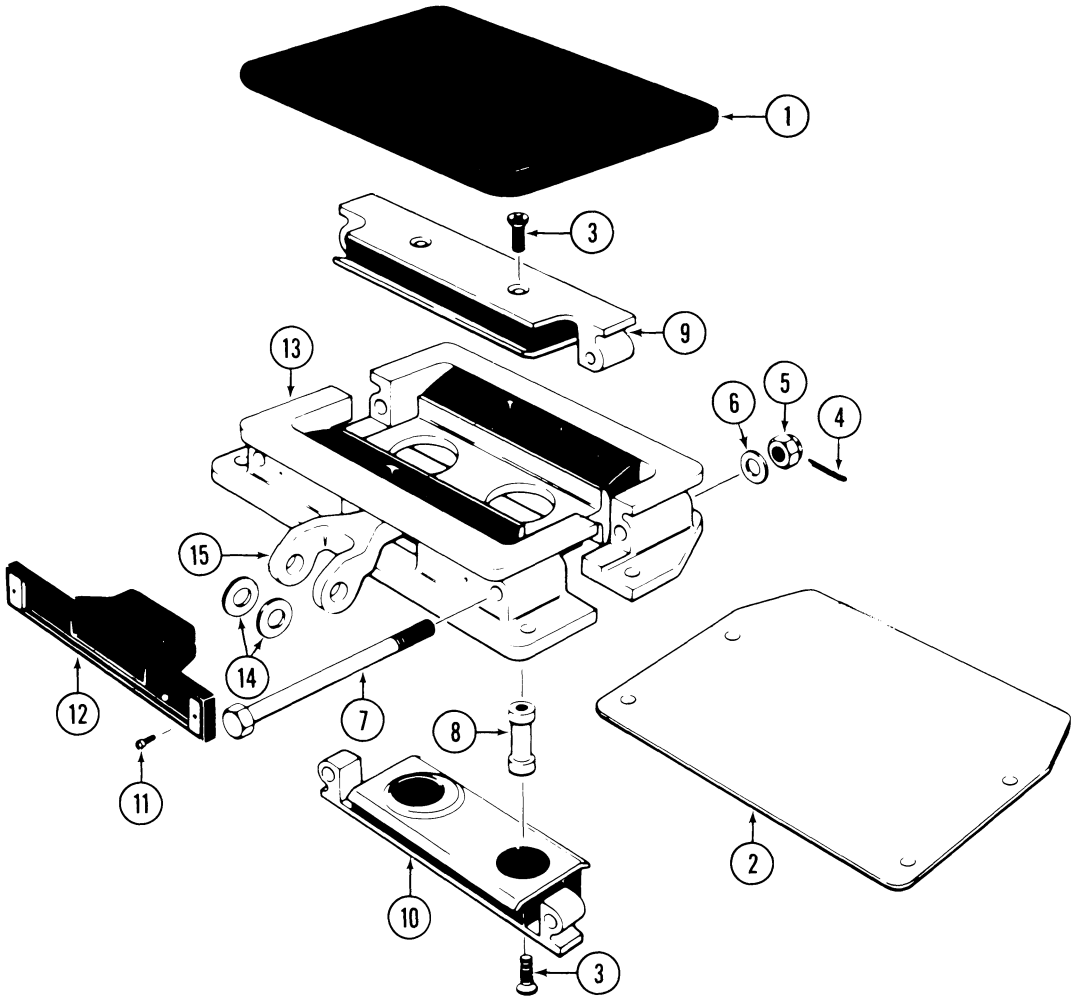

1. Top boot
2. Bottom plate
3. Nylok screw
4. Cotter pin
5. Nut
6. Washer
7. Bolt
8. Spacer
9. Bonded sandwich (center, boot side)
10. Bonded sandwich (center, bottom plate side)
11. Nylok screw
12. Front boot
13. Bonded mounting
14. Washer
15. Clevis

206040-117

Figure 6-49. Transmission Isolation Mount 206-030-539-3 — Exploded View

Table 6-6. Inspection of Transmission Isolation Mount 206-030-539-3

PART	INSPECTION FOR	ACTION
Front Boot and Bonded Mounting (12 and 13, figure 6-49).	Cuts or tears in elastomeric boot around clevis.	Remove and replace boot if cuts or tears are evident.
	Metal-to-rubber bond separation Flex cracks (surface cracks of rubber due to flexing).	Replace entire mounting if separation exceeds a total of 0.60 square inch area or if flex crack exceeds 0.10 inch deep.
	Nicks or gouges in metal parts.	Replace entire mount if nicks or gouges are evident in critical areas (see shaded areas of figure 6-10). In non-critical areas, nicks and gouges may be polished out. After polishing touch up with alodine or zinc chromate primer.
	Wear of the 0.4995 to 0.5000 inch diameter clevis hole.	Replace entire mount if hole diameter exceeds 0.5005 inch.
	Slight damage to or deterioration of oil resistant coating.	Permissible, provided bond separation and flex crack limits are met.
	Cracks in critical areas. (See shaded areas of figure 6-10.) Remove screws (11, figure 6-49) and deflect boot (12) away from clevis (15). This will permit the fluorescent penetrant inspect of clevis and arm, also allow visual inspection of front lower rail of bonded mounting (13).	Dye-penetrant inspect for cracks. Avoid spilling dye penetrant on elastomer. Replace entire mount if cracks are evident.
	Dimension of 0.626 to 0.631 inch between inside faces of clevis. Refer to first note at end of this table.	Replace entire mount if dimension is more than 0.633 inch.
Top Boot (1)	Cuts and tears	Replace if any cuts or tears are evident.
Bonded Center Sandwiches (9 and 10, figure 6-49).	Metal-to-bond separation and flex cracks (surface cracks of rubber due to flexing).	Replace entire mount if separation exceeds a total of 0.60 square inch area or if flex cracks exceed 0.10 inch deep.
	Nicks or gouges in metal parts.	Nicks or gouges less than 0.030 inch deep may be polished out. Replace entire mount if nicks or gouges are deeper than 0.030 inch.
	Deformed metal parts.	Replace entire mount if metal is deformed.
	Slight damage to or oil deterioration of oil resistant coating on flexing element.	This is permissible provided bond separation and flex crack limits are met.
	Wear across the 0.670 to 0.675 inch dimension.	Replace entire mount if width is less than 0.665 inch.

Table 6-6. Inspection of Transmission Isolation Mount (Continued)

PART	INSPECTION FOR	ACTION
Bolt (7, figure 6-49).	Bent condition or damaged threads.	Replace.
Washer (14, figure 6-49).	Dished condition or circular groove which breaks face of washer.	Replace.

Notes

Two configurations of the isolation mount are currently in service. Early model mounts have two washers bonded to the inside of the clevis. Later model mounts have bosses machined to the inside of the clevis. The 0.626 to 0.631 inch dimension is measured across the inside surface of the bosses or washers, as appropriate. On the early configuration mounts always ensure the two clevis washers are in place prior to installation of the mount. If replacement washers are not immediately available from stock, washers can be made per the following specifications:

Use Steel SAE4130, MIL-S-18729 or equivalent.
O.D. 0.740-0.760 inch.
I.D. 0.495-0.515 inch.
THICKNESS: 0.0920-0.0934 inch.
DIAMETERS: To be concentric within 0.020 inch TIR.
SURFACES: Must be flat within 0.003 inch and parallel within 0.002 inch.
HEAT TREAT: Rockwell C32/40.
FINISH: Cadmium Plate per QQ-P-416 (a) to a thickness of 0.003-0.005 inch. Brush Cadmium. Plate (item 58, table 1-1) is acceptable.

6-170A. TRANSMISSION ISOLATION MOUNT, (206-030-539-5) (22783-1).

6-170B. DISASSEMBLY — TRANSMISSION ISOLATION MOUNT (206-030-539-5).

CAUTION

Do not intermix components from one mount with those of another.

a. Remove cotter pins (1, figure 6-49A), nuts (2), washers (10), and bolts (8).

b. Remove yoke (11) from molded assembly (6).

c. Remove screws (9) from side brackets (7 and 13).

d. Remove front boot (12) by carefully inserting a knife-edge between the front boot and the mount at the sealant line. Care must be taken so that the elastomeric sections in line with sealant are not cut or damaged.

e. Remove screws (4) from side brackets (7 and 13).

f. Remove rear cover (5) by carefully inserting a knife-edge between the cover and the molded assembly (6) at the sealant line.

g. Deleted.

h. Deleted.

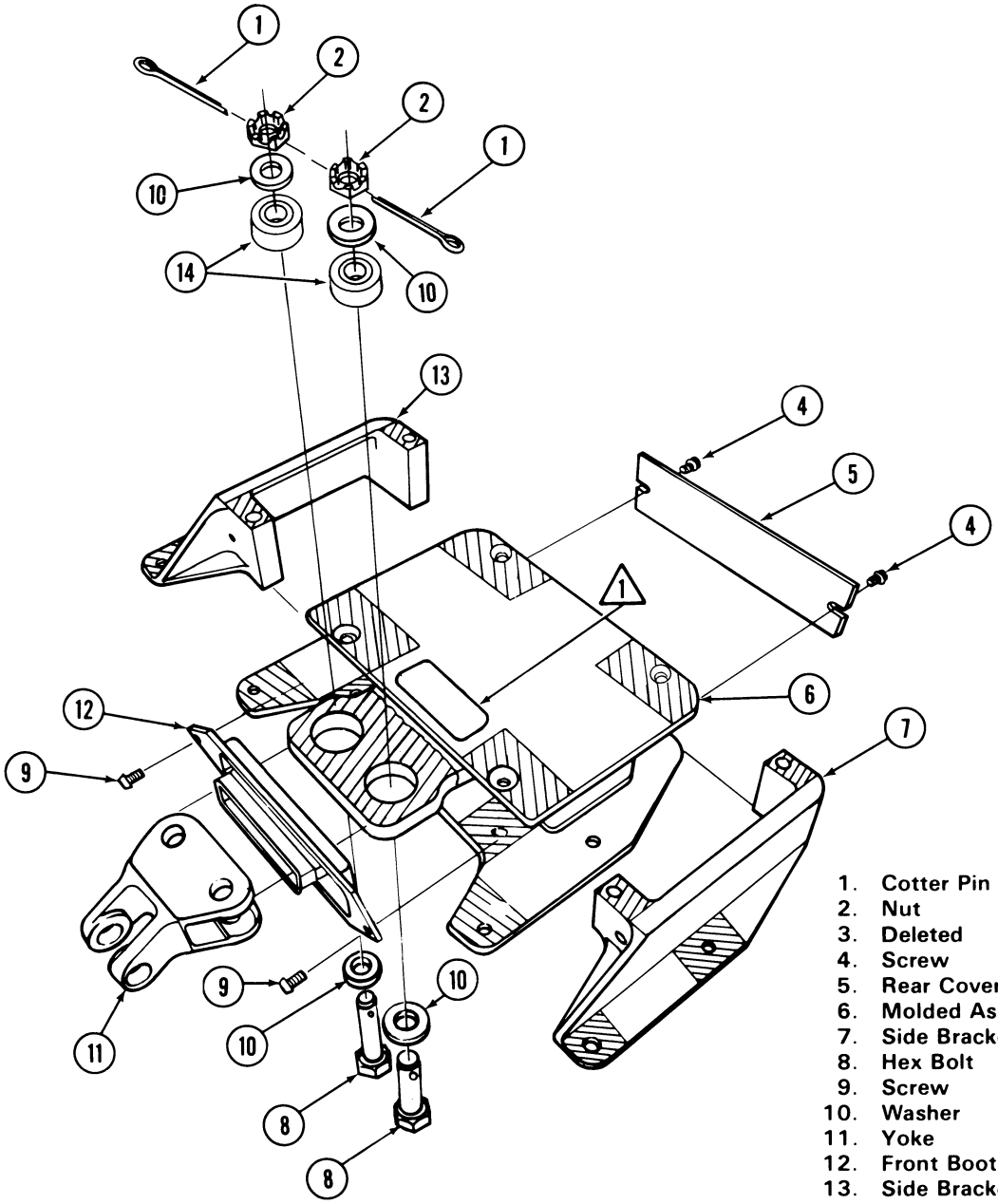

1. Cotter Pin
2. Nut
3. Deleted
4. Screw
5. Rear Cover
6. Molded Assembly
7. Side Bracket (Left)
8. Hex Bolt
9. Screw
10. Washer
11. Yoke
12. Front Boot
13. Side Bracket (Right)
14. Spherical Bearing

NOTES:

Those areas shown in cross-hatching are critical areas.

1 Refer to Bell Helicopter Textron Technical Bulletin 206-78-13 for repair/modification of isolation mount top plate.

206040-390

Figure 6-49A. Transmission Isolation Mount (206-030-539-5)

6-170C. CLEANING — TRANSMISSION ISOLATION MOUNT (206-030-539-5). Wipe oil and dirt from molded assembly (6) and front boot (12) using a clean dry cloth. Wash unbonded metal parts in cleaning solvent (item 12, table 1-1) or equivalent.

6-170D. INSPECTION — TRANSMISSION ISOLATION MOUNT (206-030-539-5). Inspect individual parts of the transmission isolation mount as outlined in Table 6-6A Due to mount construction and method of installation, entire mount must be replaced if bonded parts do not meet specifications listed within the table. (Refer to figure 66-27A.)

6-170E. REASSEMBLY — TRANSMISSION ISOLATION MOUNT (206-030-539-5).

a. Apply solvent (item 12, table 1-1) to all metal edges where sealant contact occurs.

b. Apply adhesive (item 124, table 1-1) 0.002 to 0.005 inch thick at mating surfaces between molded assembly (6, figure 6-49A) and side brackets (7 and 13).

Table 6-6A. Inspection of Transmission Isolation Mount (206-030-539-5)

PART	INSPECTION FOR	ACTION
Front Boot (12, figure 6-49A	Cuts or tears in Elastomeric Boot around clevis	Remove & replace boot if cuts or tears are evident
Molded Assembly (6, figure 6-49A), yoke (11) and side brackets (7 & 13)	Metal-to-rubber bond separation; flex-cracks (Surface cracks of rubber due to flexing)	Replace entire mounting if separation exceeds a total of 2.5 sq. inch area or if flex crack exceeds 0.5 inch deep.
	Nicks or gouges in metal parts	Replace entire mount if nicks or gouges are evident in critical areas. In non-critical areas, nicks and gouges up to 0.030 inch deep may be polished out. After polishing touch up with alodine or zinc chromate of polyamide epoxy primer.
	Wear of the 0.4995 to 0.5000 inch diameter clevis hole.	Replace yoke if hole diameter exceeds 0.5005 inch.
	Slight damage or deterioration of oil resistant coating.	Permissible, provided bond separation & flex crack limits are met
	Cracks in critical areas. (i.e. yoke, center plate of molded ass'y, side brackets, top & bottom plates) remove screws (9) and deflect boot (12) away from mount. This will permit the flouroscent penetrant inspection of the center plate	Dye penetrant inspection for cracks. Avoid spilling dye penetrant on elastomer. Replace entire mount if cracks are evident

Table 6-6A. Inspection of Transmission Isolation Mount (206-030-539-5) (Cont)

PART	INSPECTION FOR	ACTION
Molded Assembly (6, figure 6-49A), yoke (11) and side brackets (7 & 13) (Cont)	Dimension of 0.625 to 0.626 inch between inside faces of yoke	Replace yoke if dimension exceeds 0.628 inch.
	Deformed metal parts	Replace entire mount if metal is deformed
Critical Areas	Slight damage to or oil deterioration of oil resistant coating on flexing element.	This is permissible provided bond separation and flex crack limits are met.
	Center Plate - All exposed areas	
	Yoke (11) - Forward areas as shown Top & Bottom Plates and Side Brackets-Areas adjacent to tie in holes as shown; Approximately on inch square about these hole centers.	

c. Deleted.

d. Deleted.

e. Deleted.

f. Apply adhesive (item 124, table 1-1) 0.002 to 0.005 inch thick at mating surfaces if front boot (12), molded assembly (6), and side brackets (7 and 13) prior to installing front boot (12).

g. Position front boot (12) over spherical bearings (14) in molded assembly (6).

h. Install screws (9) through front boot (12).

i. Deleted.

j. Position rear cover (5) to the back of the molded assembly (6) and install screws (4) finger tight.

k. Allow adhesive (item 125, table 1-1) to cure at room temperature for 12 to 24 hours.

l. Tighten screws (4). Clean off excess adhesive (item 125, table 1-1).

m. Place yoke (11) over spherical bearings (14) in molded assembly (6).

n. Install washers (10), bolts (8), and nuts (2).

o. Torque nuts (2) 150 to 225 inch-pounds and secure with cotter pins (1).

Part 2
Overhaul — Main Rotor Mast

Note

Screen records and retire those components which have accumulated maximum operating time or will accumulate maximum operating time before next scheduled overhaul. (Refer to Section I, MANDATORY RETIREMENT SCHEDULE.)

Note

Limits Charts, listing critical dimensions of parts, are provided as a convenience in determining closeness of fit between mating parts. They also provide replacement dimensions as a guide for replacement of worn parts. It is not intended that all dimensions listed on Limits Charts are to be checked out as a prescribed overhaul procedure. Parts that give evidence of wear or physical damage will be checked dimensionally.

Note

For consumable materials item numbers, refer to Section I, CONSUMABLE MATERIALS, Table 1-1.

6-171. MAIN ROTOR MAST OVERHAUL.

Note

Remove main rotor mast assembly. (Refer to paragraph 6-28)

6-172. DISASSEMBLY — MAIN ROTOR MAST.

a. Remove screws (2, figure 6-50 and washers (2A) securing locking plate (3) to upper mast bearing nut (4), and remove plate.

b. Position mast holding tool (T101499) on lower splines to hold main rotor mast (1).

c. Position nut wrench (T102040) on mast nut (4). Insert square drive socket in square hole in wrench and, using a torque wrench, remove mast nut.

d. Remove screws (9) securing seal and bearing retaining plate (10) to upper mast bearing liner (14). Remove retaining plate (10), shim (11) and O-ring (13) from assembly.

e. Remove bearing liner (14) from bearing (12).

f. Press bearing (12) from mast (1) using T101499 mast holding fixture as work aid.

6-173. CLEANING AND INSPECTION — MAIN ROTOR MAST.

a. Clean all parts with cleaning solvent (item 12, table 1-1). Dry with filtered compressed air. Do not allow bearing to spin while drying with compressed air.

b. Inspect mast bearing as follows:

(1) Inspect bearing for evidence of debris damage (indentions) in the inner and outer races of mast bearing. Dents, nicks, indentions, scratches, or any other surface imperfections which can be definitely felt with a 0.020 inch radius scriber. (Note: imperfections approximately 0.0015 inch wide can normally be "definitely felt".) The use of scriber shall be limited to light finger pressure.

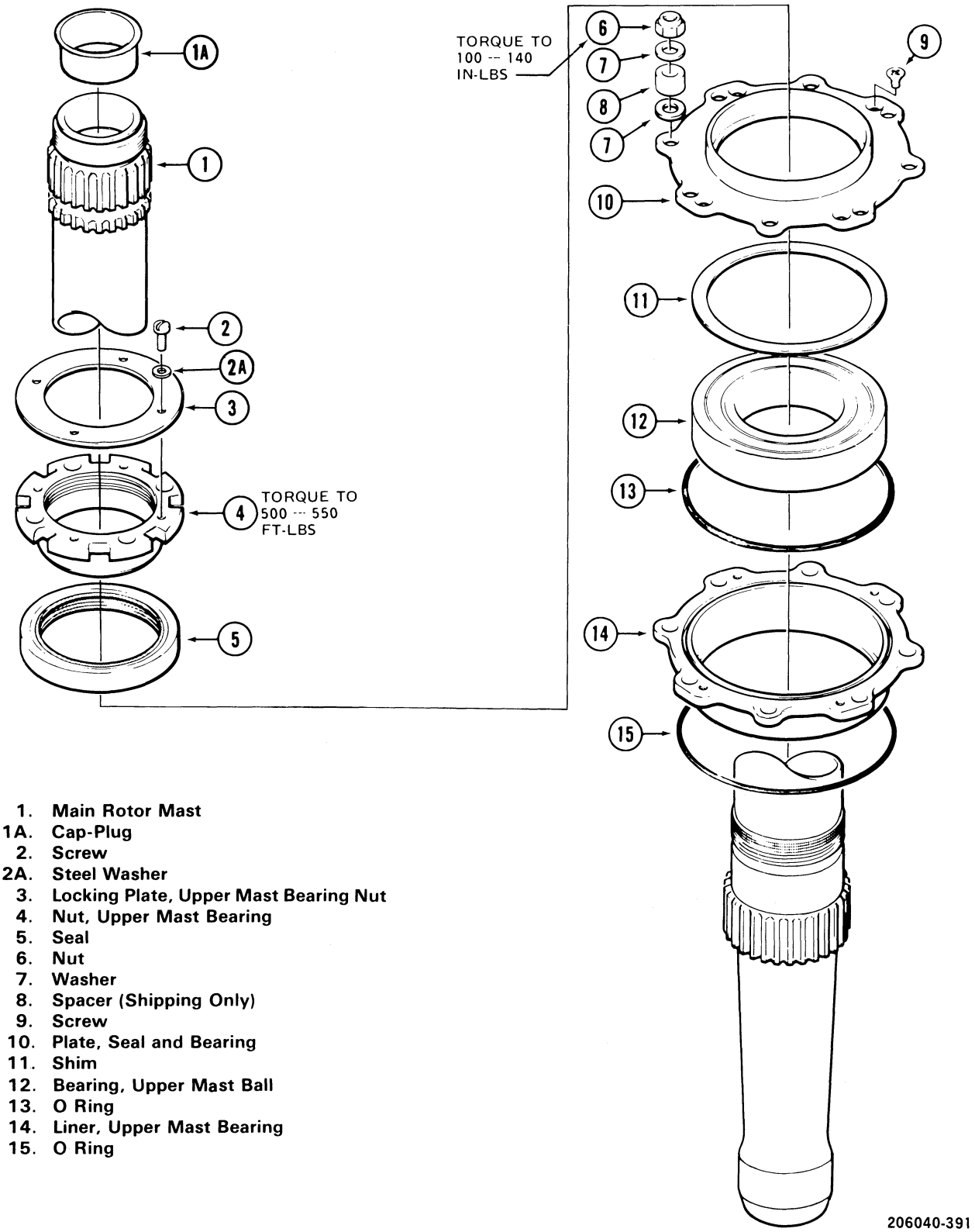

1. Main Rotor Mast
1A. Cap-Plug
2. Screw
2A. Steel Washer
3. Locking Plate, Upper Mast Bearing Nut
4. Nut, Upper Mast Bearing
5. Seal
6. Nut
7. Washer
8. Spacer (Shipping Only)
9. Screw
10. Plate, Seal and Bearing
11. Shim
12. Bearing, Upper Mast Ball
13. O Ring
14. Liner, Upper Mast Bearing
15. O Ring

Figure 6-50. Main Rotor Mast – Exploded View

Note

Debris damage will eventually result in bearing failure, therefore is cause for replacement.

(2) Inspect the inner and outer races for evidence of microspalling, in the loaded ball path. Microspalling is cause for replacement.

Note

Microspalling will appear as small pits or blisters in the ball path. Use a 4-power glass to observe this area to determine if condition exists. Microspalling is a progressive failure mode and will eventually result in a spalling failure of the race.

(3) Inspect the balls of the bearing for cuts which may indicate excessive angle. If the balls exhibit cuts, it will likely result in premature bearing failure and is cause for replacement.

(4) Bearing races that show signs of corrosion in the ball path are still considered usable if the corrosion is limited to stains that exhibit no visible depth when viewed with a 4-power glass. Corrosion that is outside the loaded ball path is acceptable if: it is limited to less than 10 percent of total bearing surface; cannot be felt with a probe having an end radius of 0.020 inch; (The use of scriber shall be limited to light finger pressure.); and is removed with Scotchbrite (item 9, table 1-1). Polishing of the balls or load area of the races is prohibited.

CAUTION

Bearing balls and races should not be handled with bare hands as the body acids may cause etchings of the surface resulting in early failures. Always oil bearing after inspections and place in a clean plastic bag or protective paper.

(5) Brinelling damage as evidenced by indentations in the races that correspond to ball spacing is cause for replacement.

Note

False brinelling is visually evidenced by minute scratches along the bore axis of the races and usually is caused by vibration during shipment. Unless this brinelling shows signs of noticeable depth which can be felt with a probe having a 0.020 inch radius, it is not cause for replacement. The use of scriber shall be limited to light finger pressure.

Inspection tool, 0.020 radius scriber, is available from:

Machinists Tools and Supplies, Inc.
1000 Quaker Street
Dallas, Texas 75207
Phone (214) 631-9390

Attention: Mr. Charles Temple

c. Visually inspect splines for burrs, nicks, cracks, and wear.

c.1. Inspect mast bearing liner for evidence of corrosion and pitting in the upper O-ring groove.

d. Refer to Section I, SPECIAL INSPECTION — ACCEPTANCE STANDARDS, for Magnetic Particle or Fluorescent Penetrant Inspection Criteria.

e. Dimensionally inspect worn parts, using dimensions listed on figure 6-51 l. (Refer to second Note above paragraph 6-171 .)

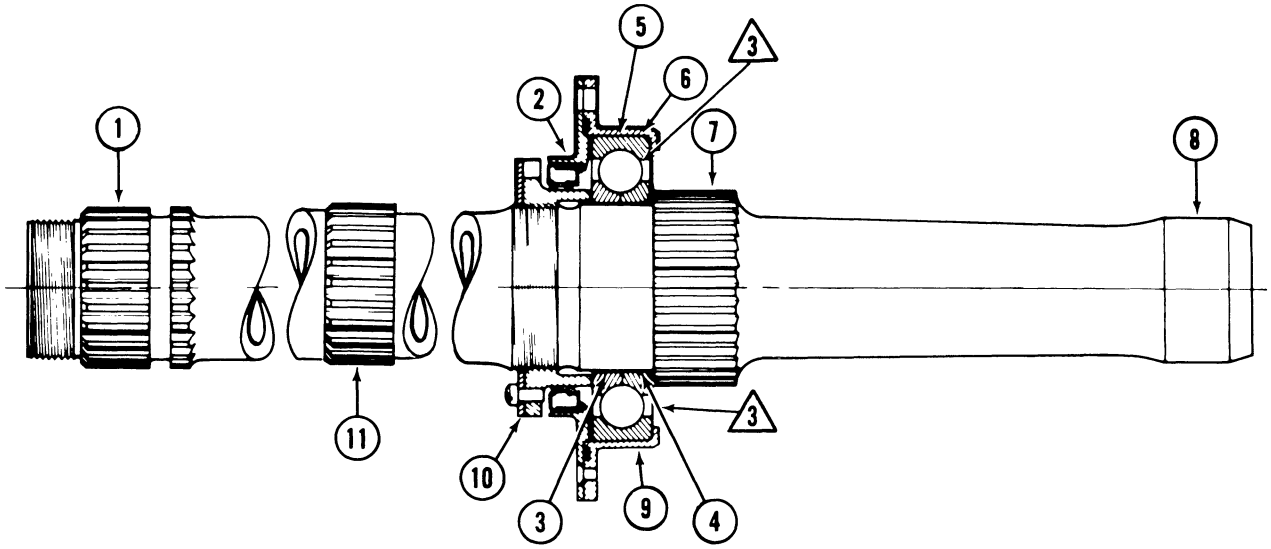

ITEM	NOMENCLATURE		MIN.	MAX.
			INCHES.	
1.	Mast Splines - Upper (Use 0.1600 diameter pins)		2.4074	
2.	Plate - Seal and Bearing Retainer	ID	3.4985	3.5025
3.	Mast - Bearing Seat	OD	2.3625	2.3631
4.	Bearing - Mast Upper	ID	2.3618	2.3623
5.	Bearing - Mast Upper (3)	OD	4.3302	4.3307
6.	Liner - Mast Upper Bearing	ID	4.3301	4.3309
7.	Mast Splines - Lower (Use 0.1600 diameter pins)	OD	2.8980	2.9030
8.	Roller Bearing Inner Race - Lower Mast	OD	(1)	2.0670
9.	Liner - Mast Upper Bearing	OD	4.5295	4.5310
10.	Nut - Upper Mast Bearing and Seal Contact Surface. Diameters and surface contacting bearing must be concentric and square within 0.002 inch TIR.	OD	2.7450	2.7530 (2)
11.	Mast Splines (Use 0.0800 diameter pins)		2.3822	

NOTES:

(1) Maximum allowable wear on the diameter is 0.0002, determined by the difference in the worn and unworn areas of the mast journal.

(2) Maximum allowable wear is 0.002 inch determined by difference in worn and unworn areas.

(3) Normal axial play for mast bearing (item 5) is approximately 0.037 inch.

206040-392

Figure 6-51. Main Rotor Mast — Limits Chart

f. Check mast for run-out as follows: (See figure 6-52)

(1) Place disassembled mast onto two V-blocks; one block under main mast bearing surface, the other block under the groove for the split cone set (in the top set of splines) augmented by two pieces of 1/4 inch square steel stock to fit in the groove.

Note

Ensure that the square stock supports the mast on the flat at the base of the groove. It may be necessary to radius the corners of the square stock due to a full radius in the groove on the mast.

(2) Check run-out with dial indicator at inner race surface for the alignment bearing (lower end of mast). Maximum permissible run-out is 0.005 inch TIR.

6-174. REPAIR AND REPLACEMENT — MAIN ROTOR MAST.

WARNING

Any mast which is reworked may be reworked one time only in those areas that are repairable and must be identified as reworked. The only exception would be when the rework is limited to the removal of surface corrosion with steel wool.

a. Dress splines with fine India stone (item 95), if necessary, to blend out burrs, small nicks, scratches, or corrosion. Repair limits are as follows:

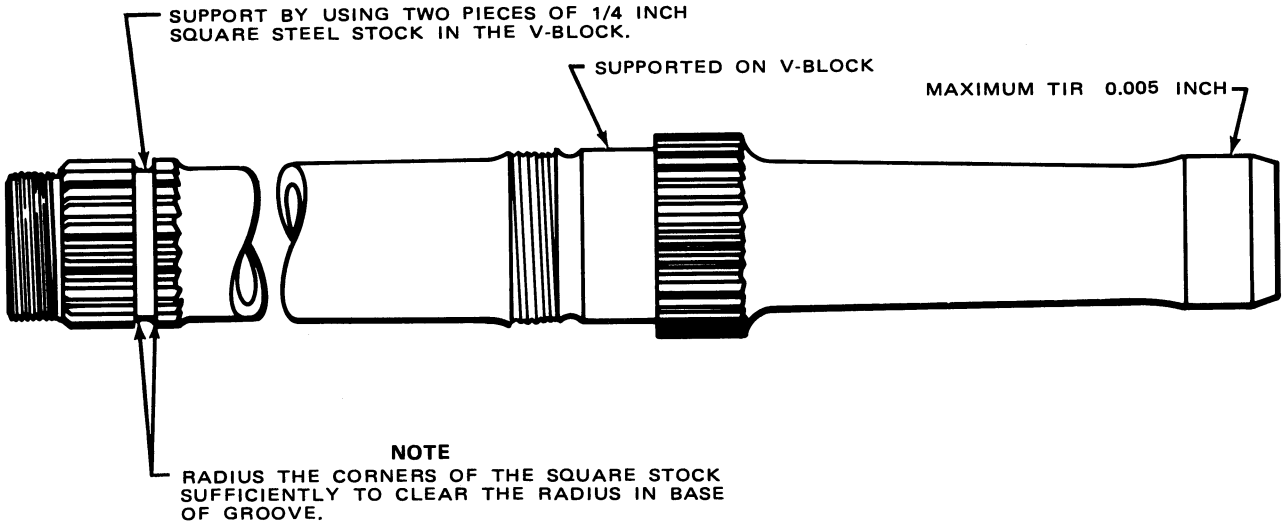

ALTERNATE METHOD

WHEN SUPPORTED AT LOWER END ON V-BLOCK MAXIMUM TIR OF 0.004 INCH AUTHORIZED AT MAIN MAST BEARING LOCATION.

206040-116

Figure 6-52. Main Rotor Mast — Run-Out Check Procedure

SPLINE END	SPLINE CROWN	SPLINE FACE
0.004 in.-sum of repair to both ends (all splines)	0.010 in. maximum (all splines)	0.002 in. maximum (1/3 of all splines)

b. Polish out nicks, dents, scratches or corrosion pits not exceeding limits given in figure 6-53 with fine India stone (item 95, table 1-1), blending repair area with surrounding area.

c. Replace mast if damage after cleanup exceeds limits given in figure 6-53 .

d. Remove superficial corrosion, using steel wool (item 87, table 1-1) in area shown in figure 6-53.

Note

Corrosion immediately above mast bearing area (area J of figure 6-53) may be removed if mast O.D. is maintained at or above 2.252 inches minimum, rework is blended smoothly with no radius less than 0.250 inch, and rework is not less than 0.740 inch from mast lower spline.

CAUTION

Do not use zinc chromate primer on mast areas contacted by transmission lubrication oil.

e. After cleanup, all internal and external surfaces of mast, except data plate, threads, splines, and lower 9.330 inches of external surface must have surface protective coating applied as follows:

(1) Remove all external surface finish using solvent (item 61, table 1-1) or lacquer thinner (item 102, table 1-1); then clean with commercial soap, water rinse thoroughly, and dry with clean, lint-free cloth.

(2) Mask data plate, threads, splines and lower 9.330 inches of mast with plating tape.

(3) Apply zinc phosphate (item 120) in accordance with manufacturer's instructions.

Note

Primer must be applied within one hour after phosphatizing.

(4) Install tapered plug (non-metallic) in mast lower end; then flow polyamide epoxy primer (item 56) into bore while rotating mast. Ensure coverage of all internal surfaces.

(5) Position mast upright, remove plug and drain primer, and allow remaining primer to air dry.

(6) Spray or brush one coat of polyamide epoxy primer (item 56) and two coats of aluminized acrylic lacquer (item 5) on the unmasked external surfaces of mast.

(7) Remove plating tape and use Scotchbrite pads (item 9) to remove any primer or phosphate, if present, from surfaces that were masked.

f. Replace mast if TIR exceeds 0.005 inch as checked in accordance with figure 6-53 .

Note

The only effective method of inspecting a bearing is to check the balls and races for pits, erosion, spalling, brinelling, etc.

g. Replace seal and bearing plate if corrosion or pitting is evident.

h. Polish out corrosion or pits in the mast bearing liner upper O-ring groove. Material removal is not to exceed 0.010 on sides and 0.005 on bottom of groove. Refer to figure 6-52A.

i. Replace all unserviceable parts.

6-175. REASSEMBLY — MAIN ROTOR MAST.

a. Apply a thin coat of corrosion preventive compound (item 24) to the mast (1, figure 6-50) to include the lower half of the threaded area above the bearing. Remove excess corrosion compound from lower surface after bearing installation.

b. Press bearing (12) onto mast (1), with the 45 degree chamfer and part number on the outer race up.

Note

A dull burr mark or the word THRUST on the inner races is no longer required. Ensure that bearing outer and inner ring serial numbers match.

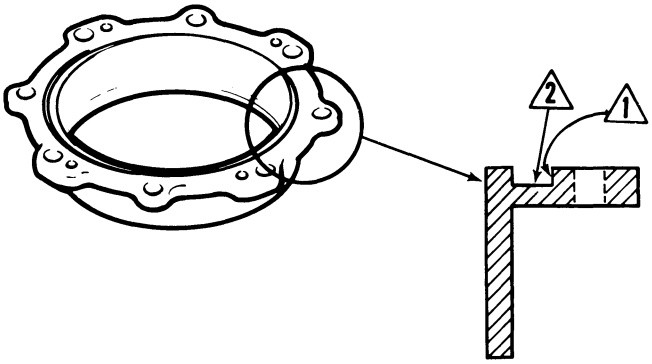

1 Repair not to exceed 0.010.

2 Repair not to exceed 0.005.

206040-358

Figure 6-52A. Mast bearing liner — repair limits

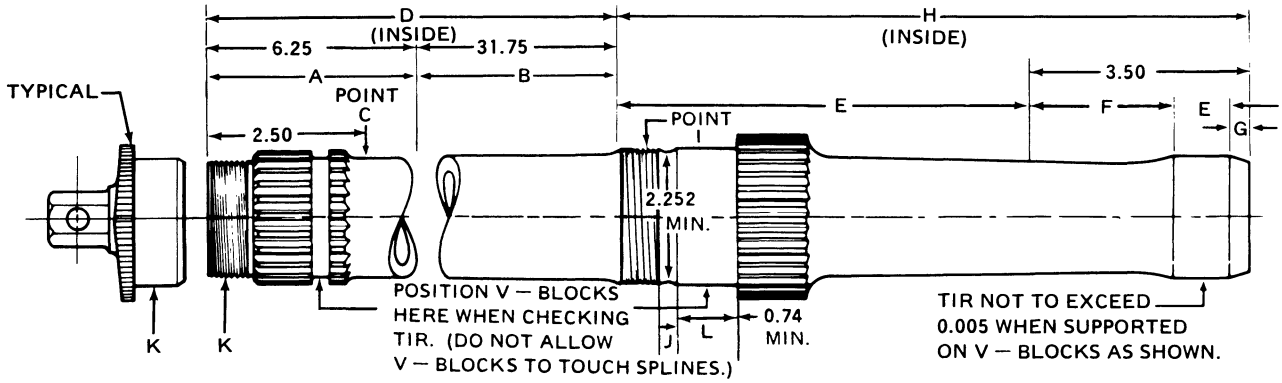

MAXIMUM ALLOWABLE DEPTH OF CLEANUP TO REMOVE CORROSION AND SCRATCH/NICK OR DENT DAMAGE

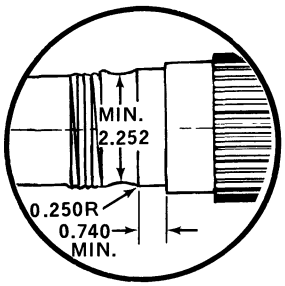

REPLACEMENT MAST

VIEW **A**

DEPTH OF REPAIR ON OUTSIDE SURFACES				
	WHEN INSIDE DIAMETER IS	DEPTH OF OUTSIDE REPAIR IS		
		FULL CIRCUM	HALF CIRCUM	QUARTER CIRCUM
AREA A	1.590	0.015	0.0175	0.020
	1.600	0.010	0.0125	0.015
	1.610	0.005	0.0075	0.010
AREA B	1.590	0.020	0.025	0.030
	1.600	0.015	0.020	0.025
	1.610	0.010	0.015	0.020

MAXIMUM INSIDE DIAMETERS AFTER REPAIR	
WHEN POINT C O D AS MEASURED 2.50 INCH FROM TOP OF MAST IS	AREA D MAXIMUM INSIDE DIA AFTER REPAIR IS
2.000	1.630
1.995	1.622
1.990	1.615

NOTE:

All dimensions are in inches.

ALLOWABLE

AREA E – Surface corrosion – only that which can be cleaned up by steel wool.

AREA F & G – 0.015 depth with 0.50 minimum radius.

AREA H – 0.005 depth or to maximum I.D. of 1.620 provided cleanup is accomplished by honing or similar method so that material removal is uniform around diameter.

POINT C –The upper 2.5 including upper 1.0 of the mast I.D. as measure from the top down may be honed, but not to exceed 0.015 in depth (0.030 diameter) as required for corrosion cleanup.

POINT I – Serration major diameter of thread may be 2.35 minimum to permit removal. of burrs from threads.

AREA J – Rework to a minimum diameter of 2.252 for corrosion removal. Repairs must blend smoothly, with a minmum radius of 0.25. Replacement masts will have area J pre-machined to preclude corrosion. (Refer to view A).

AREA J – Mast and nut threads:

a. **Maximum accumulative cleanup per thread to be 0.5.**

b. **Maximum depth of full depth repair to be 1/3 of of total of total thread height.**

c. **Maximum total length of full depth repair to be 1.0.**

206040-393A

Figure 6-53. Main Rotor Mast — Damage Limits (Sheet 1 of 2)

AREA L — Rework to a minimum width of 0.740 inches for corrosion removal. Replacement masts will have area L pre-machined to preclude corrosion (Refer to View A). Scratches or gouges parallel to long axis of the part may be reworked under the following conditions:

a. There are no more than two in any 180 degree arc.

b. There is none deeper than 0.005 inch nor wider than 0.30 inch after rework. Rework to smooth out scratch or gouge to blend smoothly with a minimum radius of 0.125 inch. Remove any raised material around scratch or gouge.

NOTES

1. If not otherwise stated all external repairs must have a minimum radius of 0.50 inch.

2. Internal repairs should consist of removing metal uniformly around the diameter.

3. Mast repair limits.

a. Areas A, B, D, F and H — May be repaired one time only (Total of five repairs per mast.)

b. Area E — No repair in this area, other than what is stated.

4. Any mast which is reworked must be identified as "reworked" by lightly stamping the letter R and the letter representing the area or point that was reworked on the center of mast data plate between part number and serial number.

206040-395

Figure 6-53. Main Rotor Mast — Damage Limits (Sheet 2 of 2)

c. Press bearing liner (14) on bearing (12), using Owatonna tool No. 951.

d. Position shim (11) on bearing (12).

e. Determine shim thickness as follows:

(1) Position bearing seal plate (10) on shim (11) and bearing liner (14).

(2) Remove or add to shim to provide 0.001 to 0.004 inch gap between plate and liner before screws (9, figure 6-50) are torqued. (See figure 6-54 .)

(3) Install packing (13) on bearing liner (14).

f. Install seal (5) in bearing and seal plate (10). Apply a thin coating of corrosion preventive compound (item 24, table 1-1) to mast thread area. Ensure that radius groove in mast is filled with the compound prior to accomplishing the following steps.

g. Insert mast bearing nut (4, figure 6-50) into seal (5) and install in bearing seal plate (10) before installing on mast.

h. Position seal (5) and mast nut (4) on shim (11) and bearing liner (14).

i. Install screws (9) to secure bearing seal plate (10) to bearing liner (14).

j. Hold mast with holding tool (T101499) and torque mast nut (4) with nut wrench (T102040). Torque nut to 500 to 550 foot-pounds.

k. Position locking plate (3) on nut (4), install two screws (2), washers (2A), and safety with 0.032 inch lockwire (item 19, table 1-1).

l. Apply sealing compound, (item 86, table 1-1), to inner edge of locking plate (3, figure 6-50) and serrations on mast threads. (See figure 6-54 .) When sealant is dry trim excess material with sharpened plastic scraper. Do not use metal scraper.

6-176. INSTALLATION – MAIN ROTOR MAST.

Note

Main rotor mast may be installed in transmission before transmission is installed on helicopter. If main rotor mast is to be installed after transmission is installed on helicopter, a plate with a lifting eye will be installed on top of top case. Remove plate from top of transmission to install main rotor mast.

a. Position O-ring (15, figure 6-50) in recess on top of case of transmission.

CAUTION

The groove in the top case is for lubrication. Do not install O-ring in the groove.

Note

Before installing main rotor mast assembly, pour one quart of turbine oil (item 20, table 1-1) into top of transmission to lubricate gears and splines with a thin coating of oil.

b. Position lower end of assembled main rotor mast assembly through opening in top of transmission. Guide end of mast into lower mast bearing and line-up spline teeth in planetary spider. Position mast bearing liner over mounting studs in top case. Install washers, spacers and nuts. Spacers and eight washers will be removed when swashplate is installed. (Refer to **Section IV.**)

c. Apply sealing compound (item 86, **table 1-1**), to outer edge of assembled seal plate (10, figure 6-50) and liner (14), and mating area of top case. When sealant is dry remove excess material, using sharpened plastic scraper. Do not use metal scraper.

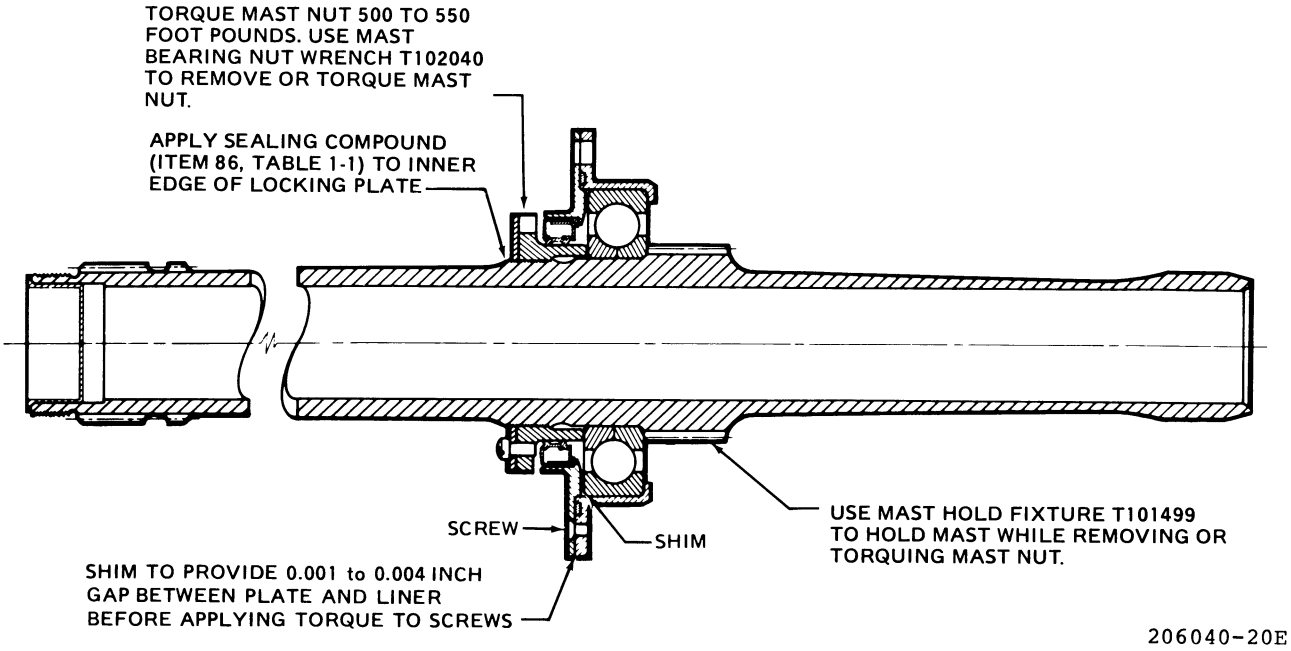

Figure 6-54. Main Rotor Mast – Build-Up

Part 3
Overhaul — Freewheeling Assembly (P/N 206-040-230)

Note

Screen records and retire those components which have accumulated maximum operating time or will accumulate maximum operating time before next scheduled overhaul. (Refer to Section I, MANDATORY RETIREMENT SCHEDULE.)

Note

Limits Charts, listing critical dimensions of parts, are provided as a convenience in determining closeness of fit between mating parts. They also provide replacement dimensions as a guide for replacement of worn parts. It is not intended that all dimensions listed on Limits Charts are to be checked out as a prescribed overhaul procedure. Parts that give evidence of wear or physical damage will be checked dimensionally.

Note

For consumable materials item numbers, refer to Section I, CONSUMABLE MATERIALS, table 1-1 .

6-177. FREEWHEELING ASSEMBLY (206-040-230) – OVERHAUL.

6-178. DISASSEMBLY — FREEWHEELING ASSEMBLY (206-040-230).

a. Remove inner and outer race shaft assemblies (4 and 17, figure 6-55) from housing assembly (34 or 42, figure 6-55, view A or B).

b. Disassemble (206-040-236-5) housing assembly (34, figure 6-55, view A) as follows:

(1) Cut and remove lockwire from drain plug (30) and bolt (38). Remove drain plug (30) and union (37) from fitting (32).

(2) Remove bolt (38) from fitting (32) and housing assembly (34).

(3) Remove and discard packings (31, 33, 36. and 39).

c. Disassemble (206-040-236-9) housing assembly (42, figure 6-55, view B) as follows:

(1) Cut and remove lockwire from drain plug (45).

( ) Remove union (40) and drain plug (45) from housing assembly (42).

(3) Remove and discard packings (41 and 44).

d. Position housing assembly (34 or 42) on suitable support with stud side down. Obtain a suitable pressing plate and position against ring (19), and press from housing assembly.

e. Remove retaining ring (1) and plug (3) from forward end of inner race shaft assembly (4). To aid in removing plug, thread a 1/4 inch by 28 UNF bolt into plug and pull from shaft assembly. Remove packing (2) from plug and discard.

Note

Early configurations of inner race shaft assemblies incorporated a (206-040-247) vent assembly. Removal of vent assembly is the same as for the plug, if it has not been reworked in accordance with paragraph 6-185 Reworked vent assemblies may be removed by inserting a loop of lockwire through drilled hole in center of vent and pull assembly from shaft assembly.

f. Remove adapter (26, figure 6-55 and housing (29) from aft end of inner race shaft assembly (4) by removing cotter pin, nut, and washer if installed. Disassemble housing (29) as follows:

(1) Remove reducer (27) and discard packing (28).

(2) Remove retaining ring (22) from inboard side of housing (29) and packing (24). Discard packing.

(3) Apply a heat lamp to housing (29) and press adapter (26) with bearing (23) from housing.

(4) Attach (Owatonna No. 951) tool to support inner race of bearing (23). (See figure 6-56 , for tool application.) Using a suitable pressing plug to protect adapter (26, figure 6-55 , press adapter from bearing.

(5) Press seal (25) from housing (29).

g. Separate inner and outer race shaft assemblies (4 and 17) as follows:

(1) Remove and discard packing (18) from outer race shaft assembly (17).

(2) Apply a heat lamp to area of bearing (16) in outer race shaft assembly (17).

(3) When thoroughly heated, position forward end of outer race shaft assembly (17) between suitable supports and press out inner race shaft assembly (4).

h. Remove cap assembly (8) from inner race shaft assembly (4) as follows:

(1) Remove and discard packing (9) from aft side of cap assembly (8).

(2) Remove inner race shaft assembly (4) from cap assembly (8).

i. Disassemble cap assembly (8) as follows:

(1) Remove retaining ring (5) from forward side of cap assembly (8).

(2) Apply a heat lamp to area of bearing (7) in cap assembly (8).

(3) Using a suitable pressing tools, press seal (6) and bearing (7) from cap assembly (8). Ensure that liner in cap assembly is not contacted by pressing tools while removing seal and bearing.

j. Disassemble outer race shaft assembly (17) as follows:

(1) Remove retaining ring (10) from inside forward end of outer race shaft assembly (17).

(2) Apply a heat lamp to outside surface of outer race shaft assembly (17).

(3) When thoroughly heated bounce front edge surface of outer race shaft assembly (17) on a block of wood until bearing (11), plate (12), and clutch assembly (13) are removed. Remove retaining ring (14) and bearing (16), reheating shaft assembly, as required.

6-179. CLEANING — FREEWHEELING ASSEMBLY (206-040-230).

a. Clean all parts with solvent (item 12, **table 1-1**).

b. Dry all parts with filtered compressed air. Do not permit bearings to spin while cleaning.

c. Inspect parts immediately after cleaning to avoid corrosion on bearings and machined parts.

6-180. INSPECTION — FREEWHEELING ASSEMBLY (206-040-230).

Note

Parts should be inspected immediately after cleaning. Exercise care to avoid corrosion to bearings and machined surfaces. Avoid finger prints on bearing surfaces. Apply turbine oil (item 20, **table 1-1**) to all parts immediately after inspection.

a. Visually inspect all parts for wear or damage.

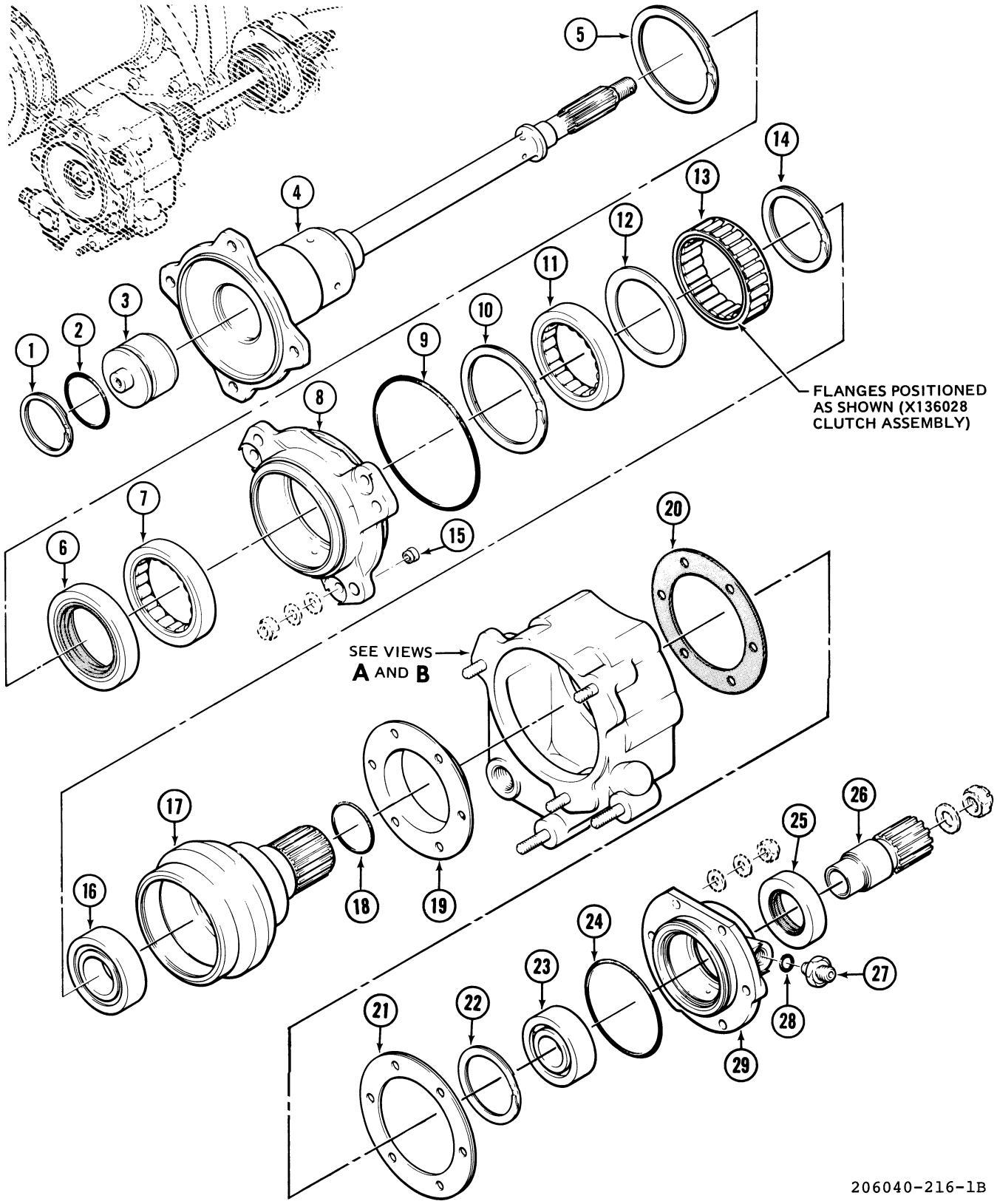

Figure 6-55. Freewheeling Assembly (206-040-230) — Overhaul (Sheet 1 of 2)

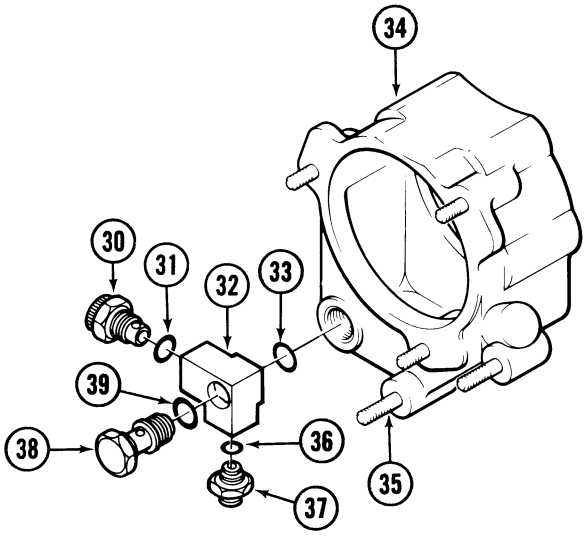

206-040-236-5 HOUSING ASSEMBLY

VIEW **A**

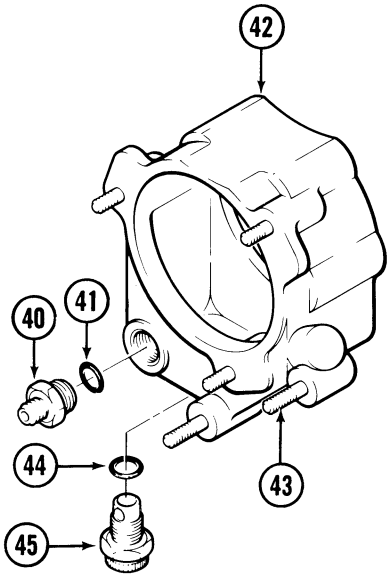

206-040-236-9 HOUSING ASSEMBLY

VIEW **B**

1. Retaining Ring
2. Packing
3. Plug
4. Shaft Assembly, Inner Race
5. Retainer Ring
6. Seal
7. Bearing
8. Cap Assembly
9. Packing
10. Retaining Ring
11. Bearing
12. Plate
13. Clutch Assembly
14. Retaining Ring
15. Clinch Nut
16. Bearing
17. Shaft Assembly, Outer Race
18. Packing
19. Ring
20. Gasket
21. Shim
22. Retaining Ring
23. Bearing
24. Packing
25. Seal
26. Adapter
27. Reducer
28. Packing
29. Housing
30. Drain Plug
31. Packing
32. Fitting
33. Packing
34. Housing Assembly
35. Stud
36. Packing
37. Union
38. Bolt
39. Packing
40. Union
41. Packing
42. Housing Assembly
43. Stud
44. Packing
45. Drain Plug

206040-216-2

Figure 6-55. Freewheeling Assembly (206-040-230) — Overhaul (Sheet 2 of 2)

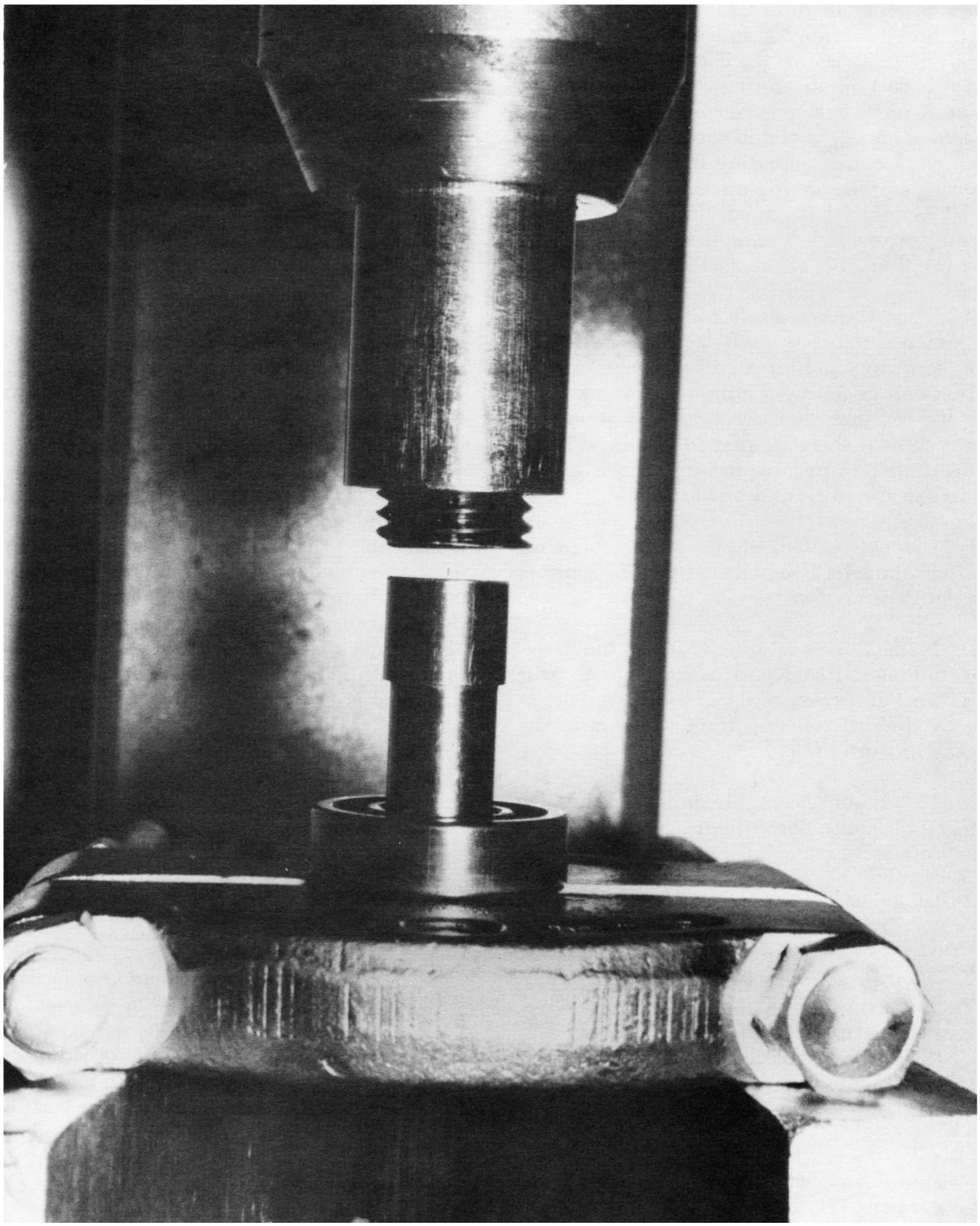

206040-91

Figure 6-56. Removal of Adapter – Owatonna No. 951 Tool Application

b. Inspect inner and outer shafts (4 and 17, figure 6-55 and tail rotor drive adapter (26) for chipped, broken or worn spline teeth.

(1) Inspect inner shaft (4) and outer shaft (17) clutch raceways for wear or other damage. Replace a shaft if the clutch raceway has brinelling, scoring, scuffing, spalling, or pitting that can be felt with a probe having an end radius of 0.030 inch. Replace shaft if it exceeds limits. Visual lines of fretting corrosion are acceptable if they do not cover more than 10% of the surface.

(2) Inspect inner shaft roller bearing and seal diameter. Replace shaft if roller path has scoring, scuffing, spalling, excessive wear or load lines that can be felt with a probe having an end radius of 0.030 inch. Replace shaft if seal path is not smooth or if there is wear in excess of 0.002 inch deep, determined by the difference in the diameters in the worn and unworn area.

(3) Inspect outer shaft roller bearing mounting diameter. Replace shaft if there is scoring or excessive wear.

(4) Inspect drive adapter (26) seal diameter. Replace adapter if seal path is not smooth or if there is wear in excess of 0.002 inch deep, determined by the difference in the diameters in the worn and unworn area.

(5) Polish out acceptable damage using 320 or 400 grit abrasive cloth or paper (item 13 or 15) or fine india stone.

c. Deleted.

Note

The following inspection criteria for the freewheeling clutch CL-41742 or CL-42250 may be used to accomplish the special inspection as specified in Section I.

d. Visually inspect freewheeling clutch for wear or damage. Use a 3x or 5x magnifying glass, as required. Replace clutch assembly if any of the following conditions exist:

(1) Inspect clutch cage for bent or distorted cross bars of flanges.

(2) Check fit of clutch by installing it in outer race. Clutch cage must be round and must not bind.

(3) Check for freedom of sprags in cage slots. Sprags must not bind in slots.

(4) Inspect clutch cage for wear on outer diameter and on side flanges. Wear in excess of 0.004 inch is not acceptable.

(5) Inspect clutch cage, sprags, and springs for corrosion. No corrosion pitting is acceptable.

(6) Inspect sprags for cracks, chips, spalling, or surface breakup which may be from scuffing, or scoring. Cracks, chips, spalling, scuffing, or scoring are not acceptable.

(7) Inspect sprag inner and outer cam surfaces for wear using a 3x or 5x magnifying glass and good light. Flat wear bands that are observable are not acceptable regardless of width, if they extend more than 1/3 the length of the sprag. Flats or wear spots within 1/4 the sprag length from each end are acceptable to any width. This type of wear is generally seen near the overrunning portion of the cam load pattern. Light polished areas are acceptable. (figure 6-56A)

(8) Inspect inner cam surfaces for load contact pattern. Outer and inner cam load contact pattern within 0.030 inch of high load edge of sprag cam is not acceptable. (figure 6-56B)

CAUTION

The clutch assembly should not be completely disassembled. For inspection, only one sprag should be removed at a time and it should be re-installed in the same cage slot. If more than one sprag is removed, reassembly must be verified as shown in figure 6-58B. The following procedure is to be used for removal of sprags for inspection.

(9) Degrease clutch assembly and let it dry.

(a) With the clutch assembly lying on a flat surface, select one sprag and remove it from the

cage by moving the upper end toward the center of the assembly sufficiently to lift the garter spring out of the sprag end notch and release the sprag. (figure 6-56C .)

(10) Inspect sides of the sprag for wear. Inspect corners of cam surfaces for chips, dents, or loss of material. Wear in excess of 0.002 inch from the original surface, or chips, or dents is not acceptable. (figure 6-56D .)

(11) Inspect inside the notch at the end of the sprag for wear caused by the garter spring. Wear in excess of 0.002 inch deep is not acceptable. (figure 6-56D .)

(12) Inspect garter spring outer diameter and sides for wear by viewing through the empty cage slot. Wear in excess of 0.006 inch is not acceptable. (figure 6-56E)

(13) Inspect empty cage slot crossbar and end flanges for wear. Wear in excess of 0.004 inch is not acceptable. (figure 6-56E)

(14) Reinstall sprag in cage slot by inserting its lower end notch over lower spring. Pull an adjacent sprag inward to uncover the upper spring. Lift the spring sufficiently to install it in the removed sprag. Verify correct orientation of the sprag to other sprags. (figure 6-56C and figure 6-58B.)

(15) Repeat the sprag removal in inspection, steps (9) through (14), on three other sprags approximately equally spaced around the clutch.

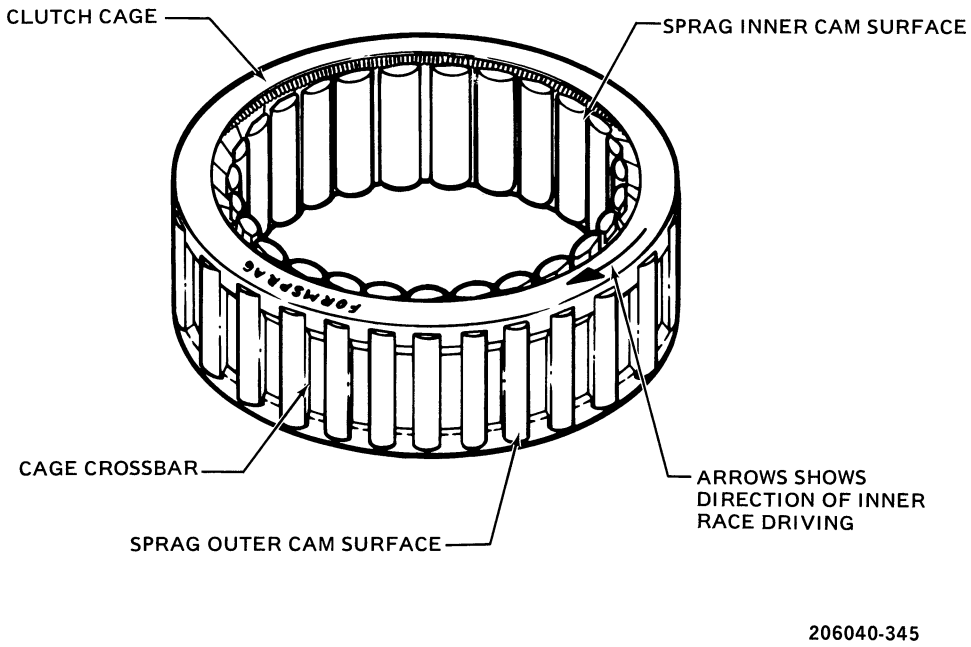

Figure 6-56A. Freewheeling clutch (CL-41742 or CL-42250)

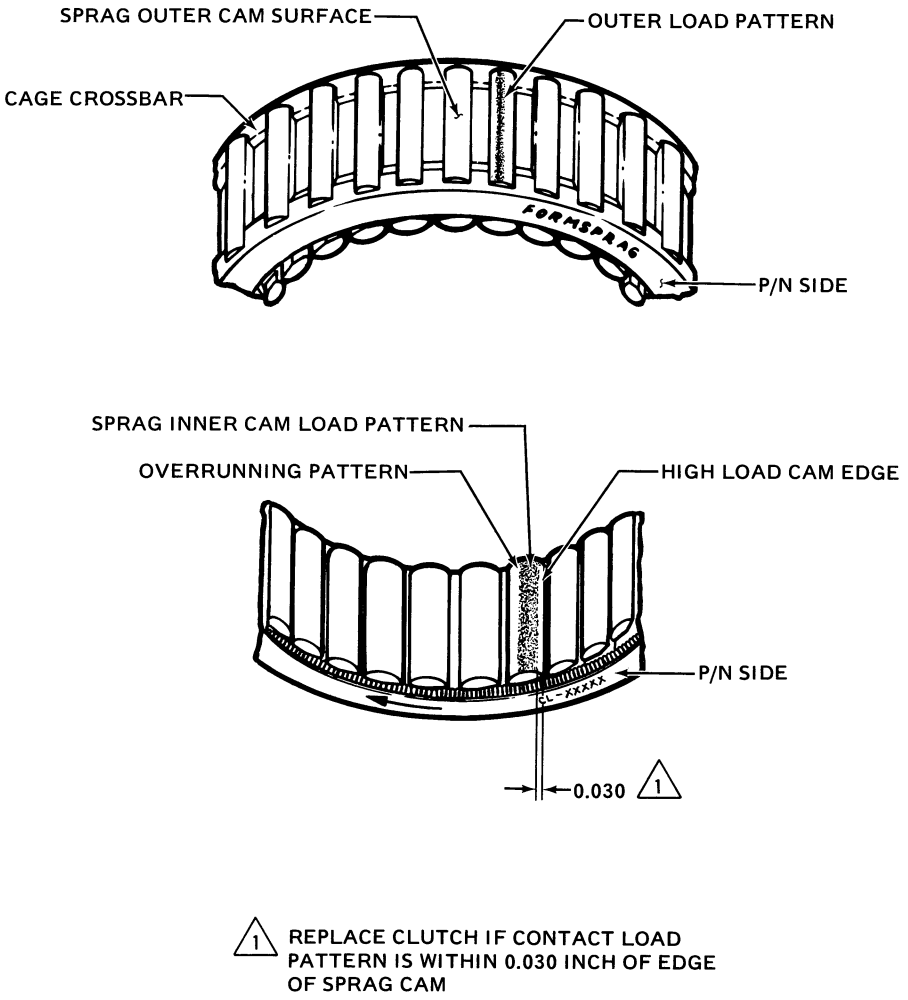

Figure 6-56B. Freewheeling clutch (CL-41742 or CL-42250) wear patterns

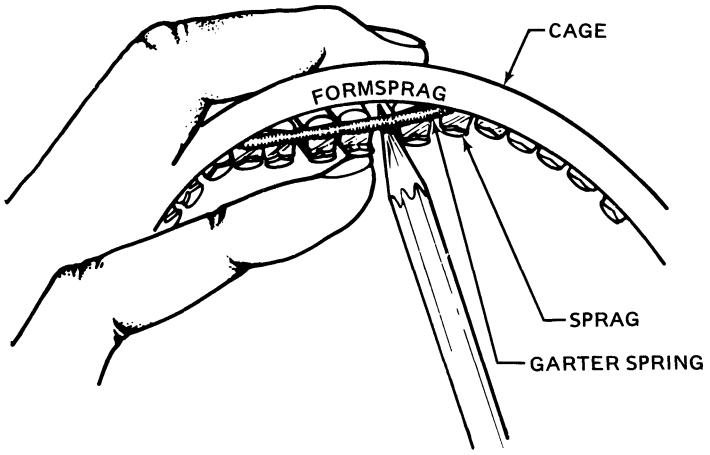

206040-347

Figure 6-56C. Freewheeling clutch (CL-41742 or CL-42250) — removal or installation of sprag

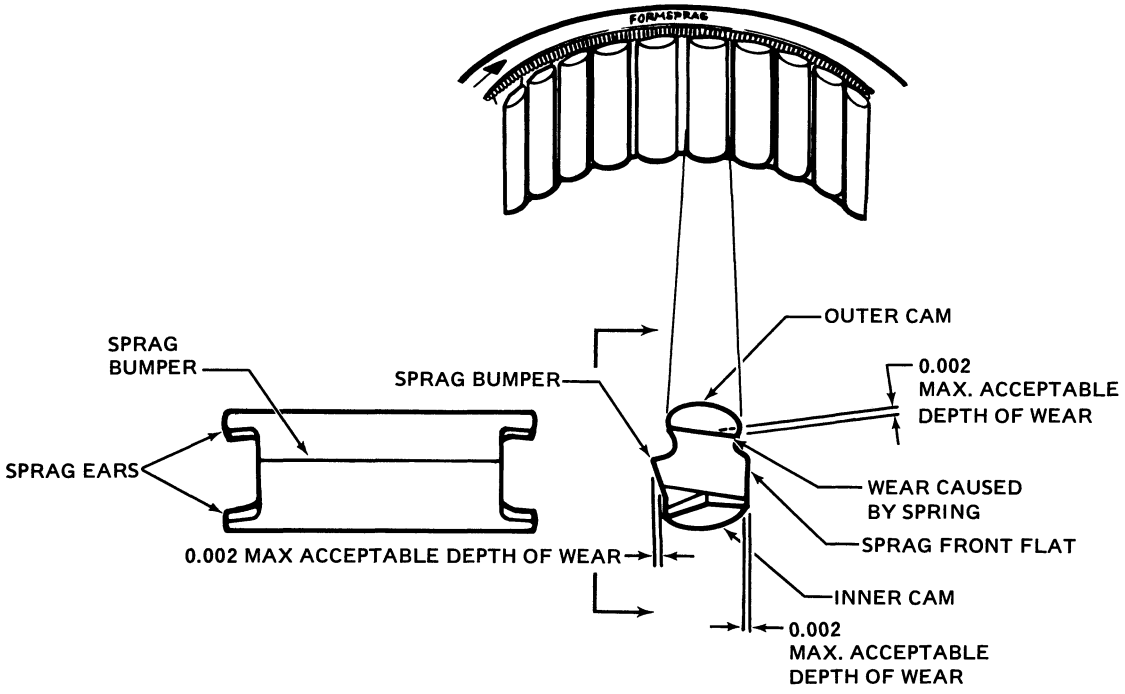

206040-348

Figure 6-56D. Freewheeling clutch (CL-41742 or CL-42250) sprag bumper and ear wear

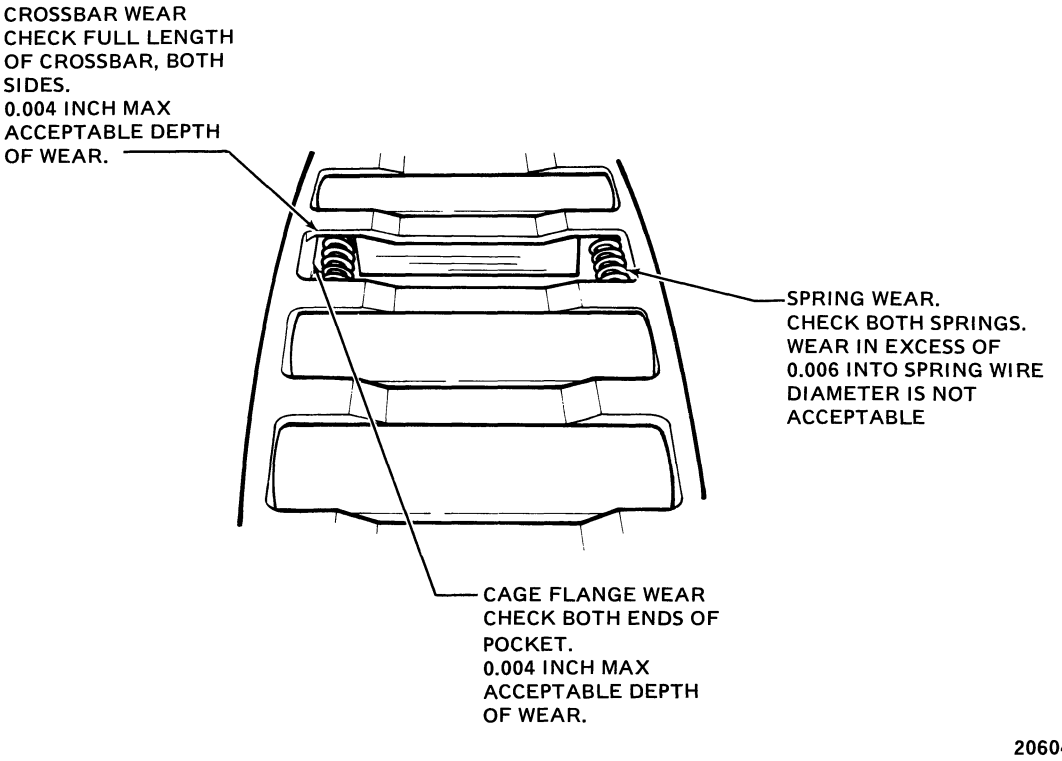

Figure 6-56E. Freewheeling clutch (CL-41742 or CL-42250) cage and spring wear

e. Visually inspect bearings (7, 11, 16, and 23) for spalling, scoring, brinelling, or corrosion damage.

f. Hold bearings (16 and 23) between fingers and roll bearings to feel for flat spots. Check for freedom of movement.

g. Visually inspect ring (19) for wear or damage.

h. Visually inspect studs (35 or 43, figure 6-55, views A and B) in housing assembly (34 or 42) for security and condition of threads.

i. Visually inspect clinch nuts (15) in cap assembly (8) for security and condition of threads.

k. Dimensionally inspect worn parts using dimensions listed on figure 6-57. (Refer to second Note above paragraph 6-177.)

l. Refer to Section I, SPECIAL INSPECTION — ACCEPTANCE STANDARDS, for Magnetic Particle or Fluorescent Penetrant Inspection Criteria.

m. Inspect parts for corrosion in accordance with paragraph 6-181 and figure 6-58.

6-181. INSPECTION — FREEWHEELING ASSEMBLY (206-040-230) CORROSION DAMAGE.

a. Replace housings or cap, if bearing liners are loose or if threads or inserts are structurally damaged and impractical to repair.

b. Replace magnesium parts that have corrosion damage in critical areas which would affect the function or structural integrity of the part or if damage exceeds the following limits for areas shown on figure 6-58.

c. The areas of the freewheeling assemblies most frequently damaged by corrosion are illustrated on figure 6-58 The acceptable limits of depth of pitting and of percentage of area pitted (i.e., the percent of area in which the original machined surface has been removed by corrosion) are as follows:

(1) Main Housing. In areas (**A** and **B**, figure 6-58), the maximum depth of pitting is 0.020 inch and no more than 40 percent of the area of any 1.0 inch square nor 20 percent of the total area of any surface or diameter should be pitted. Area **A** should be inspected carefully prior to any corrosion removal for evidence of corrosion in the threads between the studs and case. Any corrosion in the threads of the case is cause for rejection of the part. The area inside bolt holes, through surface **B**, maximum depth of pitting is 0.030 inch and no more than 20 percent of the area of the wall of the hole shall be pitted.

(2) Forward Cap. In areas (**C** and **D**, figure 6-58), the maximum depth of pitting is 0.030 inch and no more than 40 percent of the area in any 1.0 inch square nor 20 percent of the total area of any surface or diameter should be pitted.

(3) Aft Housing. In areas (**E**, **F** and **G**, figure 6-58), the maximum depth of pitting is 0.030 inch and no more than 40 percent of the area within any 1.0 inch square nor 20 percent of the total area of any diameter or surface should be pitted.

6-182. REPAIR OR REPLACEMENT — FREEWHEELING ASSEMBLY (206-040-230).

a. Replace all packings and seals upon reassembly.

b. Replace parts that are cracked, broken, warped, distorted, or have malformed threads.

c. Replace all parts that exceed allowable tolerances listed in limits chart. (See figure 6-57.)

d. Dress out minor nicks, scratches, or burrs on inner and outer race shaft assemblies (4 and 17, figure 6-55) and adapter (26) with a fine India Stone (item 95, **table 1-1**). If sufficient material is removed to exceed limits of figure 6-57 the effected part must be replaced.

e. Replace bearings that show evidence of brinelling, spalling, scoring, corrosion, discoloration from overheating, or that do not operate smoothly.

f. Repair minor scratches, nicks, or pits on non-critical surfaces with abrasive cloth (item 13, table 1-1).

g. Repair corrosion damage on magnesium parts in accordance with paragraph 6-183.

h. Replace broken, bent, damaged, or loose studs in housing assembly (34 or 42, figure 6-55) in accordance with paragraph 6-184.

i. On (206-040-230) freewheeling assemblies, rework (206-040-247-1) vent assemblies, if installed or replace with plug. (Refer to paragraph 6-185.)

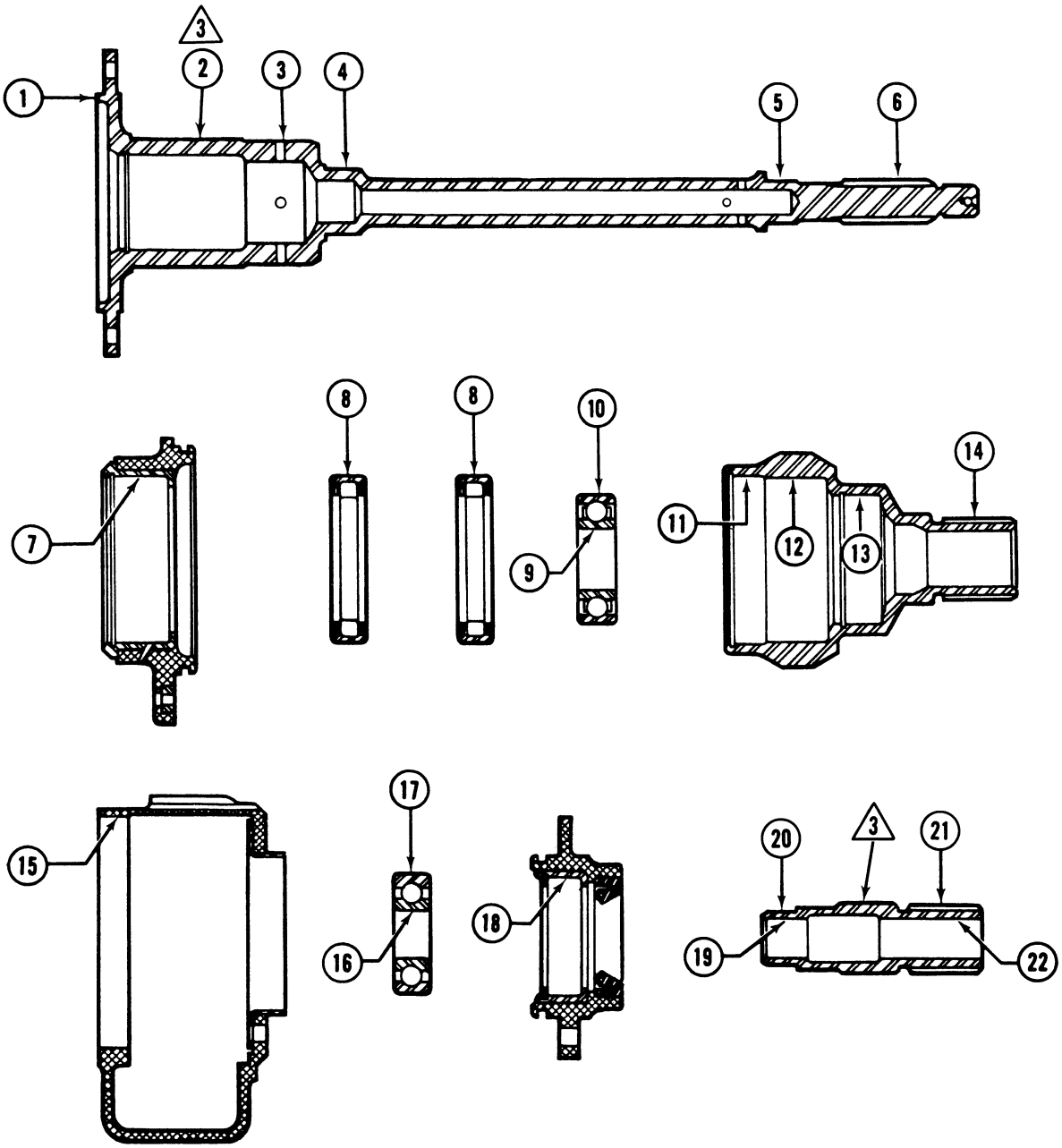

Figure 6-57. Freewheeling Assembly (206-040-230) Limits Chart (Sheet 1 of 2)

ITEM	NOMENCLATURE		MIN.	MAX.	REPLACE
1.	Shaft - drive shaft adapter shoulder - inner race	OD	3.435	3.436	3.4345
*2.	Shaft - seal and forward bearing seat - inner race	OD (3)	2.0012	2.0015	2.0010 (1)
3.	Shaft - clutch hub - inner race	OD	1.9572	1.9577	1.9560 (4)
4.	Shaft - inner bearing seat - inner race	OD	0.9844	0.9848	0.9841
5.	Shaft - tail rotor drive adapter shoulder - inner race	OD	0.6330	0.6340	0.6325
6.	Shaft - spline - inner race (Use 0.1200 diameter pins)	OD	0.7289		0.7279
7.	Cap - bearing and seal seat - freewheeling unit	ID	2.6766	2.6771	2.6774
8.	Bearing - forward roller - freewheeling (two required)	OD	2.6768	2.6772	2.6767
9.	Bearing - forward ball - freewheeling	ID	0.9841	0.9843	0.9844
10.	Bearing - forward ball - freewheeling	OD	2.0468	2.0472	2.0467
11.	Shaft - forward roller bearing seat - outer bearing	ID	2.6766	2.6771	2.6774
12.	Shaft - clutch race - outer bearing	ID	2.6130	2.6140	2.6145
13.	Shaft - forward ball bearing - outer bearing	ID	2.0465	2.0470	2.0473
14.	Shaft - spline - outer bearing (Use 0.0960 diameter pins)	OD	1.3456	1.3471	1.3446
15.	Housing - bearing and seal cap seat - freewheeling	ID	3.626	3.627	
16.	Bearing - freewheeling aft	ID	0.7872	0.7874	0.7875
17.	Bearing - freewheeling aft	OD	1.8501	1.8504	1.8500
18.	Housing - freewheeling aft bearing	ID	1.8498	1.8503	1.8506
19.	Adapter - mating bore - tail rotor drive	ID	0.6345	0.6355	0.6360
20.	Adapter - aft bearing seat - tail rotor drive	OD	0.7876	0.7880	0.7874
21.	Adapter - spline - tail rotor drive (Use 0.1200 diameter pins)	OD	1.1025 (2)	1.1100	
22.	Adapter - spline - tail rotor drive (Use 0.1080 diameter pins)	ID		0.3969	0.3979

(1) Maximum allowable wear in roller bearing path on the diameter is 0.0002, determined by the difference in the diameter in the worn and unworn areas.

(2) Dress out wear step between worn and unworn areas of spline teeth with india stone or equivalent to form a smooth transition.

(3) Maximum allowable wear in seal path is 0.002 deep, determined by the difference in the diameters in the worn and unworn area.

(4) Measured at center of clutch path. Maximum taper allowed is 0.0003 inch.

NOTE: All dimensions are in inches.

206040-394-2A

Figure 6-57. Freewheeling Assembly (206-040-230) — Limits Chart (Sheet 2 of 2)

6-183. REPAIR — FREEWHEELING ASSEMBLY (206-040-230) CORROSION DAMAGE.

a. Corrosion in areas (**A**, **B**, **C**, **G**, and **E**, figure 6-58), or on the walls of bolt holes should be removed by immersion in a hot chromic acid bath rather than by mechanical means, so that the effective position of the original surface is not changed. It is mandatory that all corrosion products be removed. (Refer to paragraph 6-94, for instructions on touchup treatment of magnesium parts.)

b. In areas (**D** and **F**, figure 6-58), if no pitting is present in the area contacted by the washer, corrosion may be removed by acid bath as described in step a. above. If this area is pitted, then surface may be machined off. Use mill cutter of same diameter and having same corner radius as originally used.

Note

Minimum dimensions after repair at point (**X**) is 0.273 inch. Minimum dimensions after repair at point (**Y**) is 0.170 inch. (See figure 6-58) Rework in either area must cleanup sufficiently that washer will contact cap or housing for the entire 360 degrees around each stud for at least 50 percent of the washer width at any point. No more than 10 percent of the area normally contacted by the washer may be pitted. Maximum depth of pitting after rework is 0.010 inch. Surface finish in reworked areas must be 63 RMS or better.

c. Inspect magnesium parts after repair for sharp edges which may damage packings during reassembly.

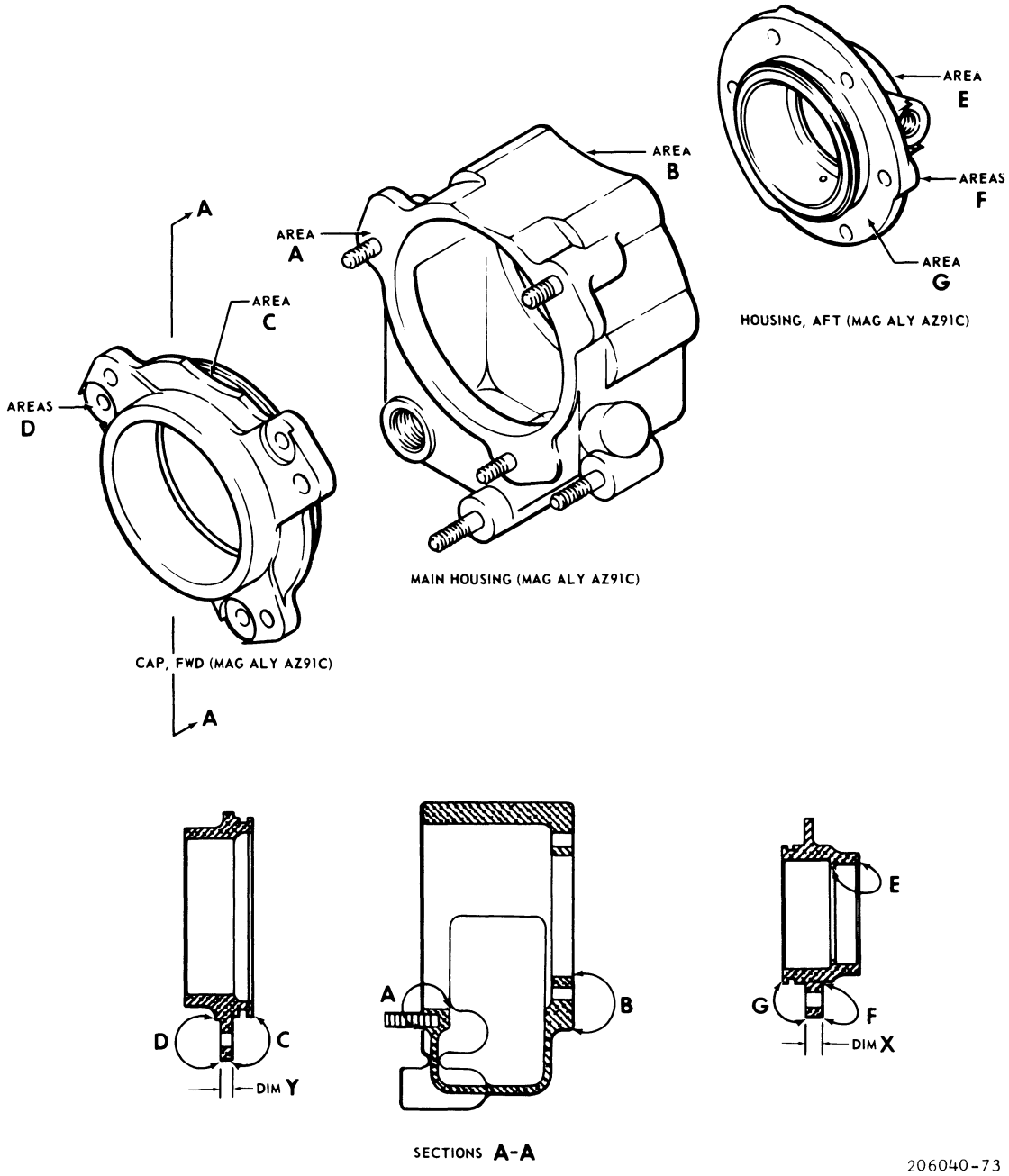

Figure 6-58. Freewheeling Assembly (206-040-230) — Corrosion Damage Limits

Note

Corrosion products must be completely removed prior to subsequent corroion protection treatments. Corrosion removal process must be controlled, and treated parts monitored to ensure that machined dimensions are maintained, and that plating is not removed from cadmium plated parts.

d. Magnesium parts must be treated for corrosion protection after rework or corrosion removal, by touching up per Dow No. 19, or treat entire part per Dow No. 7. (Refer to paragraph 6-95)

6-184. REPLACEMENT — HOUSING ASSEMBLY STUDS.

a. Remove broken, bent, cracked, damaged, or loose studs (35 or 43, figure 6-55).

b. Inspect threaded holes for studs in housing assemblies (34 or 42, figure 6-55) for damage. If threads in stud hole are damaged, repair or replace housing assembly, as required.

c. Clean out small vent hole in bottom of threaded stud hole. Apply unreduced zinc chromate primer (item 80, **table 1-1**) to threads of replacement studs and install in accordance with instructions contained in table 6-6B.

6-185. REWORK — VENT ASSEMBLY (206-040-247).

Note

The (206-040-247-1 and -3) vent assemblies were installed in the (206-040-230) free-wheeling assemblies and has been replaced by the (206-040-220) plug (3, figure 6-55). The following rework procedure may be used to continue the vent assembly in service, if all parts are serviceable.

a. Rework (206-040-247-1) vent assembly as follows: (See figure 6-58A.)

(1) Remove retaining ring, washer, spring, valve, and packing from valve housing.

(2) Clean all parts with solvent (item 12, table 1-1).

(3) Inspect all parts for wear or damage.

(4) Replace packing. Replace all parts that are cracked, broken, warped, nicked, pitted, scratched, or pitted. If any of these conditions exist replace vent assembly with plug (3, figure 6-55).

(5) Clean threaded hole on front side of valve housing with naphtha (item 36, **table 1-1**), or methyl-ethyl-ketone (item 17, **table 1-1**).

Table 6-6B. Freewheeling Housing Assembly — Stud Installation Data

LOCATION	STUD SIZE	STUD HEIGHT	INCH-POUND TORQUE
Freewheeling housing at forward bearing cap installation opening. (3 studs)	1/4	0.600	50 – 95
Freewheeling housing rotor brake mounting studs (2 studs located below bearing cap installation studs)	1/4	0.900 to 0.930	50 – 95

NOTE: Stud retaining holes must be tapped to a sufficient depth so that no imperfect threads are engaged. Install replacement studs to height shown in table. Stud driving torque must be within limits shown. If driving torque is below the low limit, replace the stud with the proper oversize stud, so that torque will be within range. Refer to Illustrated Parts Breakdown. Undersize and oversize identification is stamped on end of stud. Apply zinc chromate primer to thread studs which will be in contact with case and install while primer is wet. Make sure that small vent hole in bottom of threaded hole is open before stud is installed.

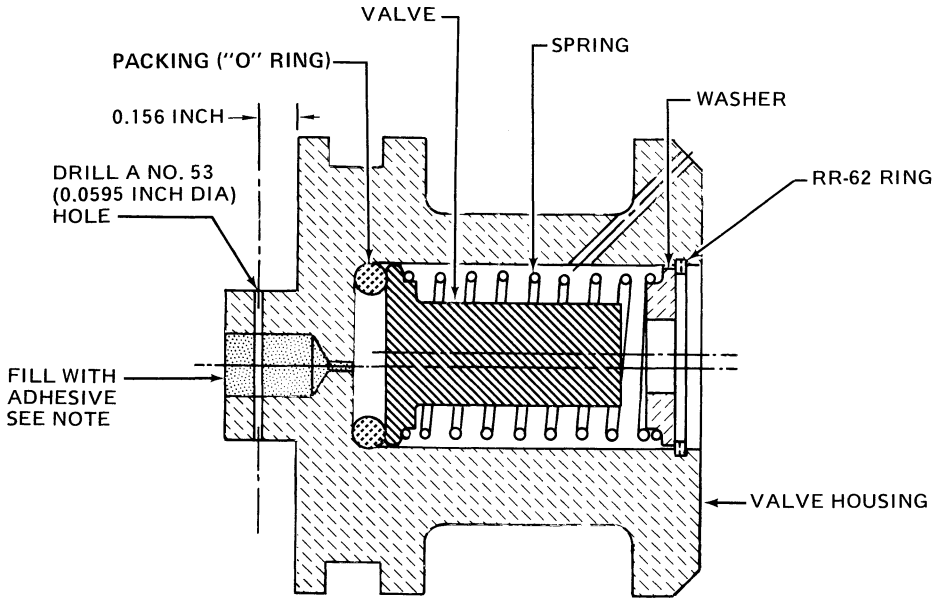

Note

When breather hole is properly filled with adhesive (item 41, table 1-1) packing, valve, spring, washer, and retainer ring are no longer required in valve housing.

206040-134A

Figure 6-58A. Cut-Away View of Freewheeling Vent Assembly

(6) Fill threaded hole on front side of valve housing with adhesive (item 31 or 41, table 1-1). Allow adhesive to cure for 24 hours at room temperature. (See figure 6-58A.)

(7) Drill one number 53 (0.0595 inch diameter) hole as shown on figure 6-58A, and clean and deburr. This hole will be used to allow entry of lockwire for future removal of the vent assembly.

b. Assemble (206-040-247-1) vent assembly as follows:

Note

The installation of packing, valve, spring, washer, and retaining ring is not required after filling threaded hole in valve housing with adhesive. If parts are serviceable it is recommended that they be reinstalled in the event that adhesive plug fails.

(1) Apply turbine oil (item 20, table 1-1) to new packing inside valve housing. (See figure 6-58A.)

(2) Assemble valve, spring, and washer into valve housing, and secure with retaining ring.

c. Reidentify (206-040-230-15) shaft assembly as (206-040-230-21), (206-040-230-13) freewheeling assembly as (206-040-230-19), and (206-040-249-1) valve housing as (206-040-249-3).

d. The (206-040-247-3) vent assembly does not require adhesive application. The packing, valve, spring, washer, and retaining ring may be omitted during reassembly for they are no longer required.

6-186. REASSEMBLY — FREEWHEELING ASSEMBLY (206-040-230).

a. If used, reassemble (206-040-236-5) housing assembly (34, figure 6-55 , view A) as follows:

(1) Lubricate new packings (31, 33, 36, and 39) with turbine oil (item 20, table 1-1).

(2) Insert packing (39, figure 6-55) on bolt (38) and position bolt in fitting (32). Insert packing (33) on shank of bolt (38) and install fitting (32) to housing assembly (34).

(3) Insert packing (31) on drain plug (30) and install in fitting (32).

(4) Insert packing (36) on union (37) and install in fitting (32).

(5) Torque bolt (38), drain plug (30), and union (37) to standard torque. Safety drain plug (30), and head of bolt (38) together with 0.032 inch lockwire (item 19, table 1-1).

b. If used, reassemble (206-040-236-9) housing assembly (42, figure 6-55, view B) as follows:

(1) Lubricate new packings (41 and 44) with turbine oil (item 20, table 1-1).

(2) Insert packing (41, figure 6-55) on union (40) and install in housing assembly (42).

(3) Insert packing (44) on drain plug (45) and install in housing (42).

(4) Tighten union (40) to standard torque. Torque drain plug (45) to 120 to 150 inch-pounds. Secure drain plug to housing with 0.032 inch lockwire (item 19, **table 1-1**).

c. Position ring (19, figure 6-55) inside housing assembly (34 or 42, figure 6-55, view A or B). Align bolt holes and using a suitable pressing plate, press into place.

d. Reassemble cap assembly (8) as follows:

(1) Apply a heat lamp to front surface of cap assembly (8). Apply a film of sealing compound (item 8, **table 1-1**) on seal (6) outside diameter. Obtain a suitable pressing plug that contacts bearing (7) outer race and press bearing (7) into cap assembly. Do not allow pressing plug to contact liner in bearing cap assembly. Press seal (6) in cap assembly in same manner the bearing (7) was pressed in cap assembly. Trim excess sealing compound.

(2) Install retaining ring (5) in forward side of cap assembly (8).

(3) Apply a film of lubricant (item 133, table 1-1) to lip of seal (6, figure 6-55) and packing (9). Install packing (9) in groove on inboard side of cap assembly (8).

e. Install cap assembly (8) next to adapter flange on forward end of inner race shaft assembly (1).

f. Apply a film of lubricant (item 26, table 1-1) to packing (2, figure 6-55). Insert packing (2) on plug (3), or reworked vent assembly, and install in forward end of inner race shaft assembly (4). Secure with retaining ring (1).

g. Reassemble clutch assembly (13) and, inner and outer race shaft assemblies (4 and 17) as follows:

(1) Apply a film of turbine oil (item 20, table 1-1) to race surfaces of inner and outer race shaft assemblies (4 and 17, figure 6-55), bearings (11 and 16), plate (12), and clutch assembly (13).

(2) Apply a heat lamp to outer race shaft assembly (17) and install bearing (16) and retaining ring (14). Use a suitable pressing plate to firmly seat bearing at outer races in shaft assembly.

(3) If (CL-41742 or CL-42250) clutch assembly (13) was disassembled, care must be exercised during reassembly. Ensure all parts are clean. Set cage on clean work area with arrow etched on cage pointing clockwise and install lower spring. (See figure 6-58B.) Position all sprags in place over the lower spring. Take top spring in both hands and fit it into the top slots of the sprags. This will push all sprags into position within the cage.

Note

If one or two sprags come loose, check adjoining sprags for correct position and the upper and lower springs for deformation.

(4) Install (CL-41742 or CL-42250) clutch assembly (figure 6-58B) with arrow etched on cage pointing clockwise as viewed from open end of outer race shaft assembly (17). Push clutch assembly into shaft assembly with hand pressure until fully seated and all sprags are properly positioned.

(5) If (X136028) clutch assembly is to be installed, position clutch assembly inside outer race shaft assembly (17) with cage flanges on clutch outboard (See figure 6-55). Obtain a strip of soft aluminum sheet stock to place inside outer race shaft assembly in first bearing bore. The stock must be thick enough so that when the strip is coiled one turn in first bearing bore the inside diameter will be slightly smaller than inside diameter of clutch seat (ends must not overlap).

Position clutch assembly inside coiled aluminum strip with cage flanges out board and work clutch sprags into strip one at a time. When all sprags are positioned inside coiled strip, push clutch assembly into shaft assembly with hand pressure until fully seated. Remove coiled strip.

CAUTION

Freewheeling clutch must not be disassembled (sprags removed). If clutch is dropped or disassembled it must be returned to Bell Helicopter Textron for inspection and reassembly.

(6) Install plate (12) with chamfered outer edge inboard next to clutch assembly (13).

(7) Using a suitable pressing plate, press bearing (11) into outer race shaft assembly (17) and against plate 12). Secure with retaining ring (10).

(8) Reapply turbine oil (item 20, table 1-1) to race surfaces of inner and outer race shaft assemblies (4 and 17, figure 6-55 , bearings (11 and 16), and clutch assembly (13).

(9) Install (Owatonna No. 951) tool around outer race shaft assembly (17) and position on arbor press. (See figure 6-58C for tool application.) Insert inner race shaft assembly (4, figure 6-55) in outer race shaft assembly (17). Rotate inner race shaft assembly in left hand or counter clockwise direction by hand to pass sprags in clutch assembly (13). Do not use arbor press until inner race shaft assembly has engaged inner race of bearing (16).

(10) Apply turbine oil (item 20) to new packing (18, figure 6-55) and install in groove above splines on outer race shaft assembly.

(11) Check clutch assembly (13) for proper operation. Hold outer race shaft assembly (17) with flange end of inner race shaft assembly (4) towards you. Rotate flange end of inner race shaft assembly clockwise and clutch assembly should drive; rotate counter clockwise and clutch assembly should freewheel.

h. Reassemble housing (29) and adapter (26) as follows:

(1) Apply a heat lamp to housing (29). When thoroughly heated install bearing (23) in inboard side of housing and secure with retaining ring (22).

(2) Apply a film of sealing compound (item 8) on seal (25) outside diameter. Press new seal (25) into outboard side of housing (29).

(3) Apply a film of lubricant (item 26, table 1-1) to lip of seal (25, figure 6-55) and new packings (24 and 28). Install packing (24) in groove on inboard side of housing (29) and packing (28) on reducer (27).

(4) Apply a film of turbine oil (item 20, table 1-1) to inner race of bearing (23, figure 6-55), and to adapter (26). Support inner race of bearing (25) from inboard side of housing (31). Using a suitable pressing plug, press adapter (26) through seal (25) and into inner race of bearing (25).

(5) Install reducer (27) in housing (29) and tighten to standard torque.

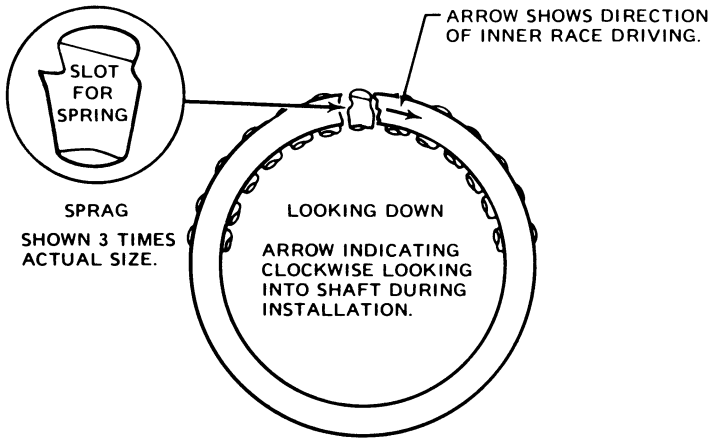

206040-340

Figure 6-58B. One-Way Clutch Assembly (CL-41742 or CL-42250)

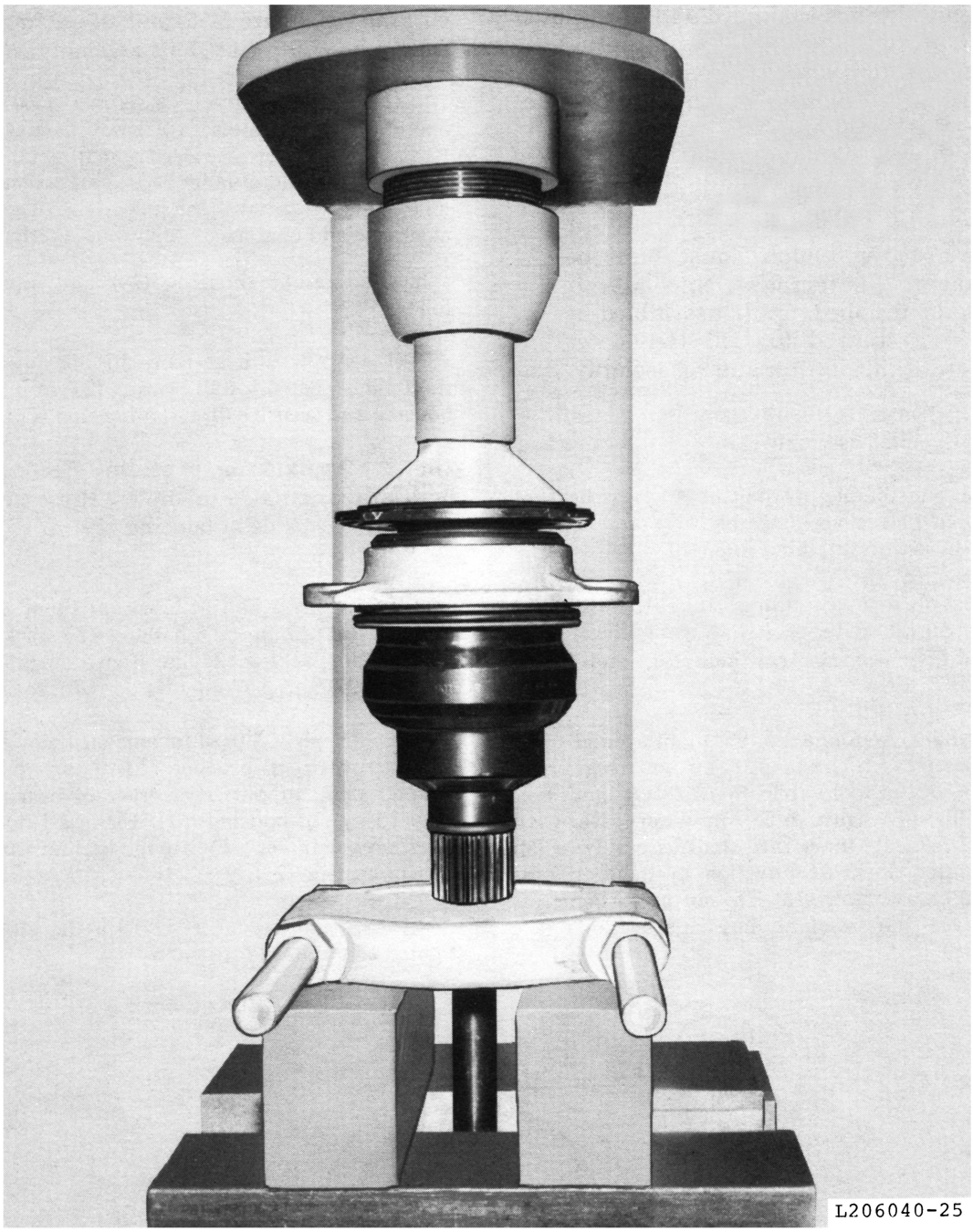

Figure 6-58C. Reassembly of Inner and Outer Race Shaft Assemblies — Owatonna No. 951 Tool Application

i. Apply a film of turbine oil (item 20, table 1-1) to inside diameter of ring (19, figure 6-55) and to packing (18). Install assembled inner and outer race shaft assemblies (4 and 17) into housing assembly (34 or 42, figure 6-55 view A or B). Align cap assembly (8) to studs (35 or 43) on housing assembly and seat cap assembly. Install an aluminum washer, steel washer, and nut on each stud. Do not torque nuts.

j. Install housing (29) with adapter (26) on aft end of inner race shaft assembly (4), and install steel washer and nut. Do not torque nut.

k. Paint freewheeling assembly in accordance with paragraph 6-187 and table 6-6C.

l. Protect freewheeling assembly by covering with wrapping paper (item 98) until installation on helicopter.

6-187. PAINTING — FREEWHEELING ASSEMBLY.

Note

Painting of freewheeling assembly parts may be accomplished prior to reassembly if desired.

a. Clean external surfaces of cap and housing assemblies with naphtha (item 36, table 1-1). Wipe surfaces dry.

b. Apply a bead of sealant (item 115) around groove where cap assembly mates with housing assembly.

c. Remove or cover with masking tape (item 75), drain plug, union, and reducer.

d. Cover exposed portions of inner race shaft assembly and flange, seals, studs, and adapter with wrapping paper (item 98) and masking tape (item 75).

e. Paint freewheeling assembly in accordance with table 6-6C. Remove wrapping paper and masking tape after paint cure.

Table 6-6C. Freewheeling Assembly — Paint Requirements

ITEM NAME	PAINT TYPE AND SPECIFICATION	METHOD OF APPLICATION	NO. OF COATS	NOTES
Freewheeling Assembly	Polyamide Epoxy Primer Coating (Two Part Kit)	Spray	1	Exterior surface 0.6 mil minimum thickness after drying
	Catalyzed Epoxy Prime	Spray	1	Exterior surface 0.4 mil minimum thickness after drying
	Acrylic lacquer, aluminized P-95, Federal Std. Color No. 17178	Spray	2	

Part 3A
Overhaul — Freewheeling Assembly (P/N 206-040-270)

Note

Screen records and retire those components which have accumulated maximum operating time or will accumulate maximum operating time before next scheduled overhaul. (Refer to Section I, MANDATORY RETIREMENT SCHEDULE.)

Note

Limits Charts, listing critical dimensions of parts, are provided as a convenience in determining closeness of fit between mating parts. They also provide replacement dimensions as a guide for replacement of worn parts. It is not intended that all dimensions listed on Limits Charts are to be checked out as a prescribed overhaul procedure. Parts that give evidence of wear or physical damage will be checked dimensionally.

Note

For consumable materials item numbers, refer to Section I, CONSUMABLE MATERIALS, Table 1-1.

6-188. FREEWHEELING ASSEMBLY (206-040-270) – OVERHAUL.

6-188A. DISASSEMBLY — FREEWHEELING ASSEMBLY (206-040-270).

a. Remove inner and outer race shaft assemblies (1 and 14, figure 6-59) from housing assembly (20).

b. Disassemble housing assembly (20) as follows:

(1) Cut and remove lockwire from self-closing valve (23). Remove union (16), self-closing valve (23), and detector (24). Remove and discard packings (17 and 22).

(2) Position housing assembly (20) on suitable support with stud side down. Obtain a suitable pressing plate and position against ring (18), and press from housing assembly.

c. Remove adapter (28) and housing (31) from aft end of inner race shaft assembly (1) by removing cotter pin, nut, and washer if installed. Disassemble housing (31) as follows:

(1) Remove reducer (30) and discard packing (29).

(2) Remove retaining ring (21) from inboard side of housing (31) and packing (26). Discard packing.

(3) Apply a heat lamp to housing (31) area.

(4) Press adapter (28) with bearing (25) from housing (31).

(5) Attach (Owatonna No. 951) tool to support inner race of bearing (25). (See figure 6-56 , for tool application.) Using a suitable pressing plug to protect adapter (28, figure 6-59), press adapter from bearing.

(6) Press seal (27) from housing (31).

d. Separate inner and outer race shaft assemblies (1 and 14) as follows:

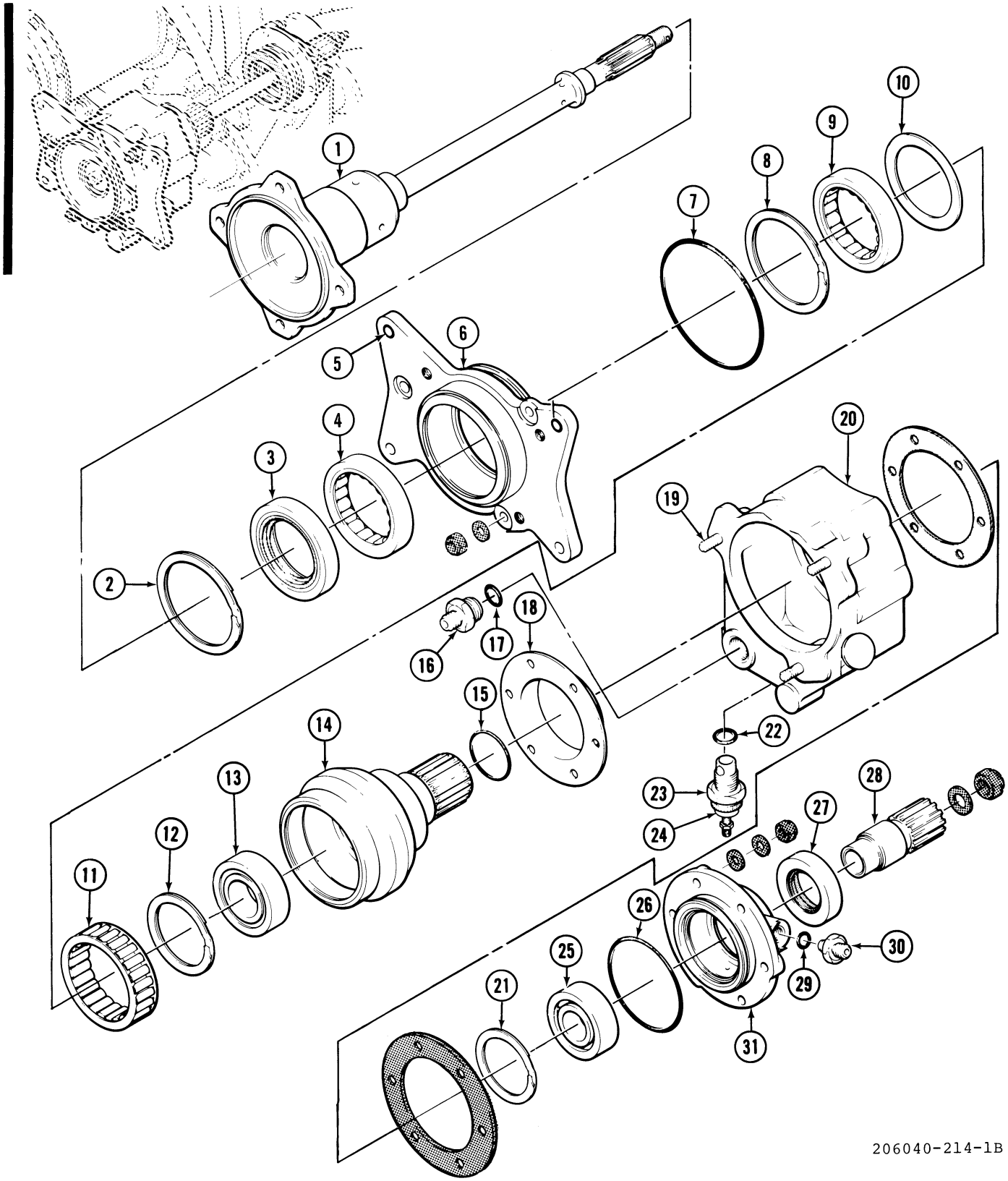

Figure 6-59. Freewheeling Assembly (206-040-270) — Overhaul (Sheet 1 of 2)

1. Shaft Assembly, Inner Race
2. Retaining Ring
3. Seal
4. Bearing
5. Insert
6. Cap Assembly
7. Packing
8. Retaining Ring
9. Bearing
10. Plate
11. Clutch Assembly
12. Retaining Ring
13. Bearing
14. Shaft Assembly, Outer Race
15. Packing
16. Union
17. Packing
18. Ring
19. Stud
20. Housing Assembly
21. Retaining Ring
22. Packing
23. Self-Closing Valve
24. Detector
25. Bearing
26. Packing
27. Seal
28. Adapter
29. Packing
30. Reducer
31. Housing

206040-214-2

Figure 6-59. Freewheeling Assembly (206-040-270) — Overhaul (Sheet 2 of 2)

(1) Remove and discard packing (15) from outer race shaft assembly (14).

(2) Apply a heat lamp to area of bearing (13) in outer race shaft assembly (14).

(3) When thoroughly heated, position forward end of outer race shaft assembly (14) between suitable supports and press out inner race shaft assembly (1).

e. Remove cap assembly (6) from inner race shaft assembly (1) as follows:

(1) Remove and discard packing (7) from aft side of cap assembly (6).

(2) Remove inner race shaft assembly (1) from cap assembly (6).

f. Disassemble cap assembly (6) as follows:

(1) Remove retaining ring (2) from forward side of cap assembly (6).

(2) Apply a heat lamp to area of bearing (4) in cap assembly (6).

(3) Using a suitable pressing tools, press seal (3) and bearing (4) from cap assembly (6). Ensure that liner in cap assembly is not contacted by pressing tools while removing seal and bearing.

g. Disassemble outer race shaft assembly (14) as follows:

(1) Remove retaining ring (8) from inside forward end of outer race shaft assembly (14).

(2) Apply a heat lamp to outside surface of outer race shaft assembly (14).

(3) When thoroughly heated bounce front edge surface of outer race shaft assembly (14) on a block of wood until bearing (9), plate (10), and clutch assembly (11) are removed. Remove retaining ring (12) and bearing (13), reheating shaft assembly, as required.

6-188B. CLEANING — FREEWHEELING ASSEMBLY (206-040-270).

a. Clean all parts with solvent (item 12, table 1-1).

b. Dry all parts with filtered compressed air. Do not permit bearings to spin while cleaning.

c. Inspect parts immediately after cleaning to avoid corrosion on bearings and machined parts.

6-188C. INSPECTION — FREEWHEELING ASSEMBLY (206-040-270).

Note

Parts should be inspected immediately after cleaning. Exercise care to avoid corrosion to bearings and machined surfaces, and avoid getting finger prints on bearing surfaces. Appy turbine oil (item 20, table 1-1) to all parts immediately after inspection.

a. Visually inspect all parts for wear or damage.

b. Inspect inner and outer shafts (1 and 14, figure 6-59 and tail rotor drive adapter (28) for chipped, broken or worn spline teeth.

(1) Inspect inner shaft (1) and outer shaft (14) clutch raceways for wear or other damage. Replace a shaft if the clutch raceway has brinelling, scoring, scuffing, spalling, or pitting that can be felt with a probe having an end radius of 0.030 inch. Replace shaft if it exceeds limits. Visual lines of fretting corrosion are acceptable if they do not cover more than 10% of the surface.

(2) Inspect inner shaft roller bearing and seal diameter. Replace shaft if roller path has scoring, scuffing, spalling, excessive wear or load lines that can be felt with a probe having an end radius of 0.030 inch. Replace shaft if seal path is not smooth or if there is wear in excess of 0.002 inch deep, determined by the difference in the diameters in the worn and unworn area.

(3) Inspect outer shaft roller bearing mounting diameter. Replace shaft if there is scoring or excessive wear.

(4) Inspect drive adapter (28) seal diameter. Replace adapter if seal path is not smooth or if there is wear in excess of 0.002 inch deep, determined by the difference in the diameters in the worn and unworn area.

(5) Polish out acceptable damage using 320 or 400 grit abrasive cloth or paper (item 13 or 15) or fine India stone.

c. Deleted.

Note

The following inspection criteria for the freewheeling clutch (CL-41742 or CL-42250) may be used to accomplish the special inspection as specified in **Section I.**

d. Visually inspect freewheeling clutch for wear or damage. Use a 3x or 5x magnifying glass, as required. Replace clutch assembly if any of the following conditions exist:

(1) Inspect clutch cage for bent or distorted cross bars of flanges.

(2) Check fit of clutch by installing it in outer race. Clutch cage must be round and must not bind.

(3) Check for freedom of sprags in cage slots. Sprags must not bind in slots.

(4) Inspect clutch cage for wear on outer diameter and on side flanges. Wear in excess of 0.004 inch is not acceptable.

(5) Inspect clutch cage, sprags, and springs for corrosion. No corrosion pitting is acceptable.

(6) Inspect sprags for cracks, chips, spalling, or surface breakup which may be from scuffing, or scoring. Cracks, chips, spalling, scuffing, or scoring are not acceptable.

(7) Inspect sprag inner and outer cam surfaces for wear using a 3x or 5x magnifying glass and good light. Flat wear bands that are observable are not acceptable regardless of width, if they extend more than 1/3 the length of the sprag. Flats or wear spots within 1/4 the sprag length from each end are acceptable to any width. This type of wear is generally seen near the overrunning portion of the cam load pattern. Light polished areas are acceptable. (figure 6-59A)

(8) Inspect inner cam surfaces for load contact pattern. Outer and inner cam load contact pattern within 0.030 inch of high load edge of sprag cam is not acceptable. (figure 6-59B)

CAUTION

The clutch assembly should not be completely disassembled. For inspection, only one sprag should be removed at a time and it should be re-installed in the same cage slot. If more than one sprag is removed, reassembly must be verified as shown in figure 6-59H. The following procedure is to be used for removal of sprags for inspection.

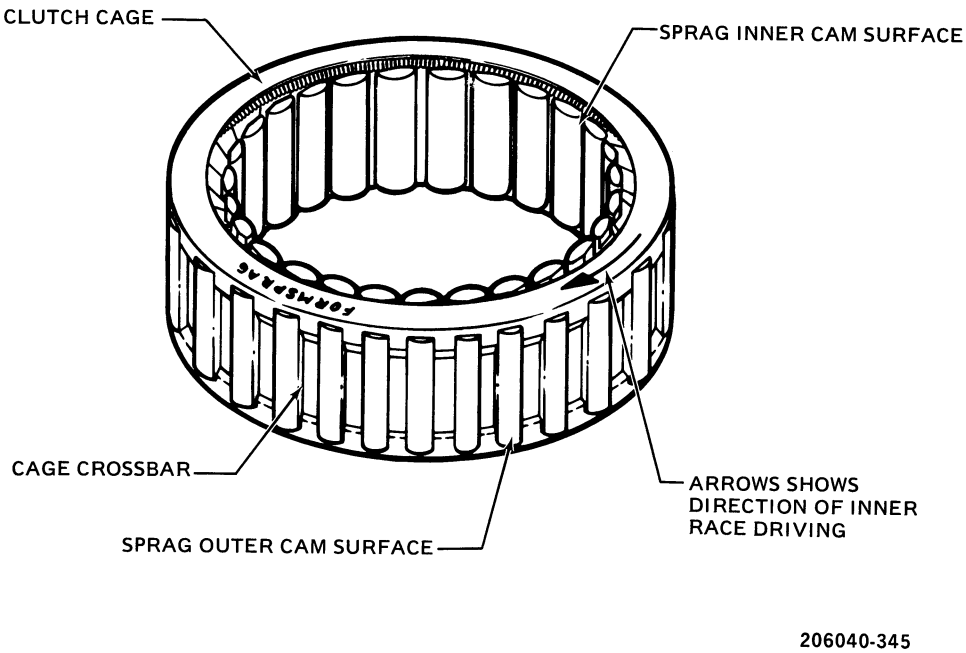

Figure 6-59A. Freewheeling clutch (CL-41742 or CL-42250)

(9) Degrease clutch assembly and let it dry.

(a) With the clutch assembly lying on a flat surface, select one sprag and remove it from the cage by moving the upper end toward the center of the assembly sufficiently to lift the garter spring out of the sprag end notch and release the sprag. (figure 6-59C)

(10) Inspect sides of the sprag for wear. Inspect corners of cam surfaces for chips, dents, or loss of material. Wear in excess of 0.002 inch from the original surface, or chips, or dents is not acceptable. (figure 6-59D)

(11) Inspect inside the notch at the end of the sprag for wear caused by the garter spring. Wear in excess of 0.002 inch deep is not acceptable. (figure 6-59D)

(12) Inspect garter spring outer diameter and sides for wear by viewing through the empty cage slot. Wear in excess of 0.006 inch is not acceptable. (figure 6-59E)

(13) Inspect empty cage slot crossbar and end flanges for wear. Wear in excess of 0.004 inch is not acceptable. (figure 6-59E)

(14) Reinstall sprag in cage slot by inserting its lower end notch over lower spring. Pull an adjacent sprag inward to uncover the upper spring. Lift the spring sufficiently to install it in the removed sprag. Verify correct orientation of the sprag to other sprags. (figure 6-59C and figure ure 6-59I

(15) Repeat the sprag removal and inspection, steps (9) through (14), on three other sprags approximately equally spaced around the clutch.

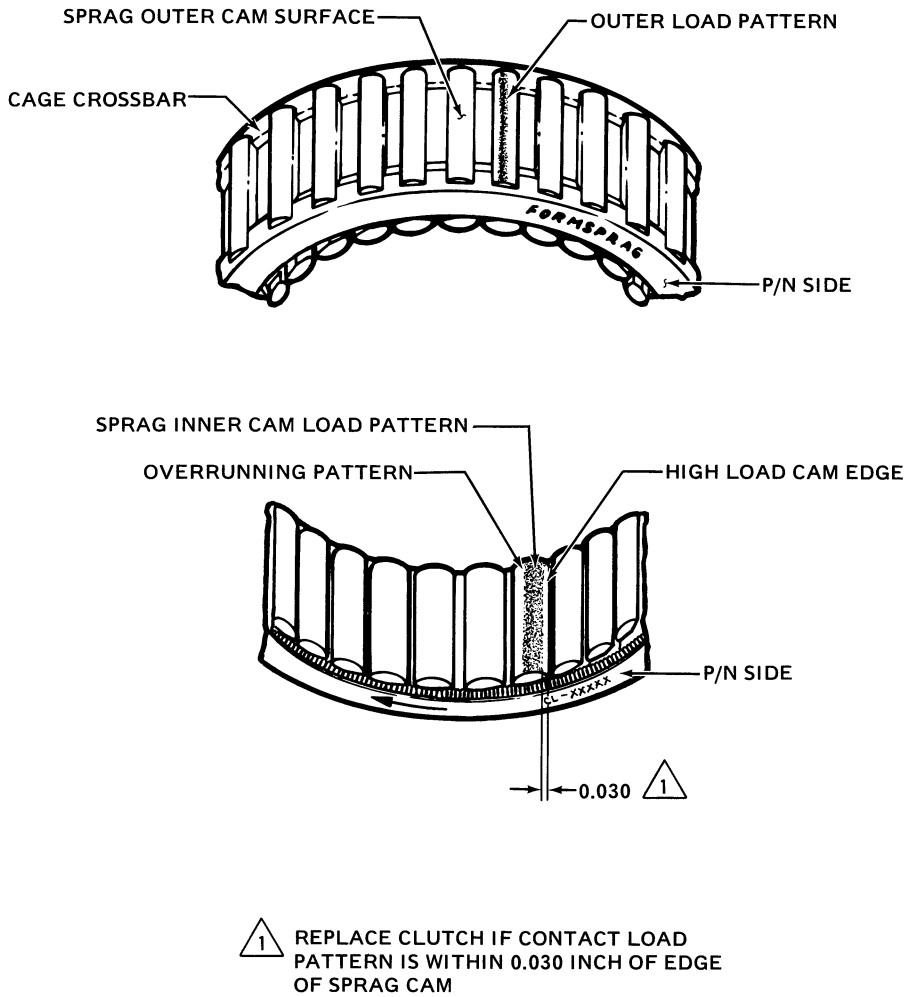

Figure 6-59B. Freewheeling clutch (CL-41742 or CL-42250) wear patterns

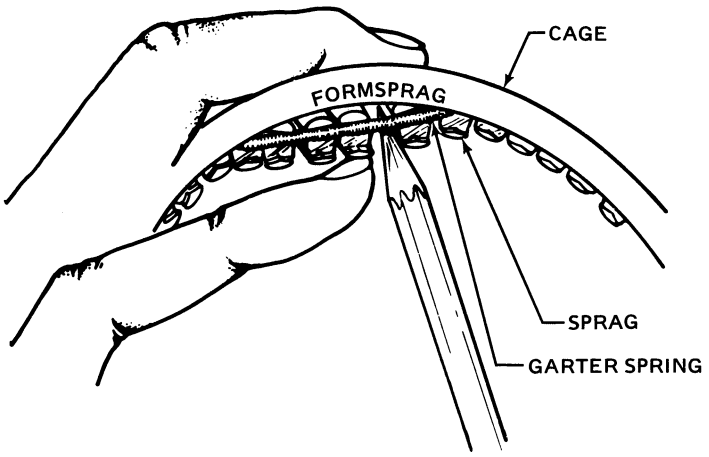

206040-347

Figure 6-59C. Freewheeling clutch (CL-41742 or CL-42250) — removal or installation of sprag

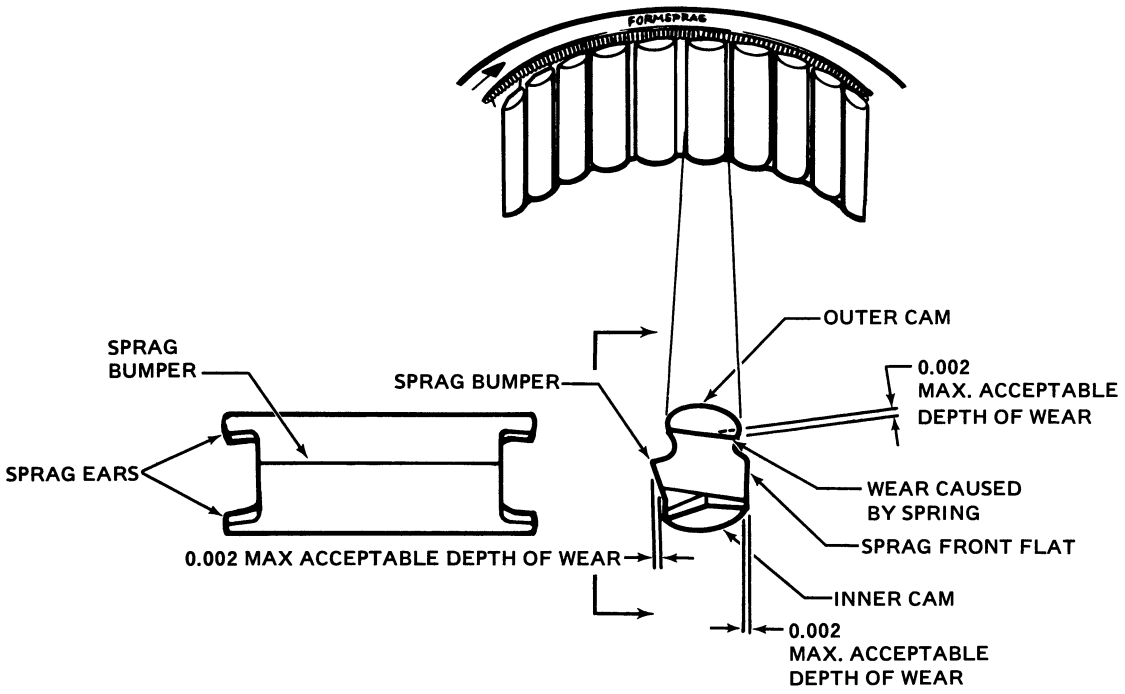

206040-348

Figure 6-59D. Freewheeling clutch (CL-41742 or CL-42250) sprag bumper and ear wear

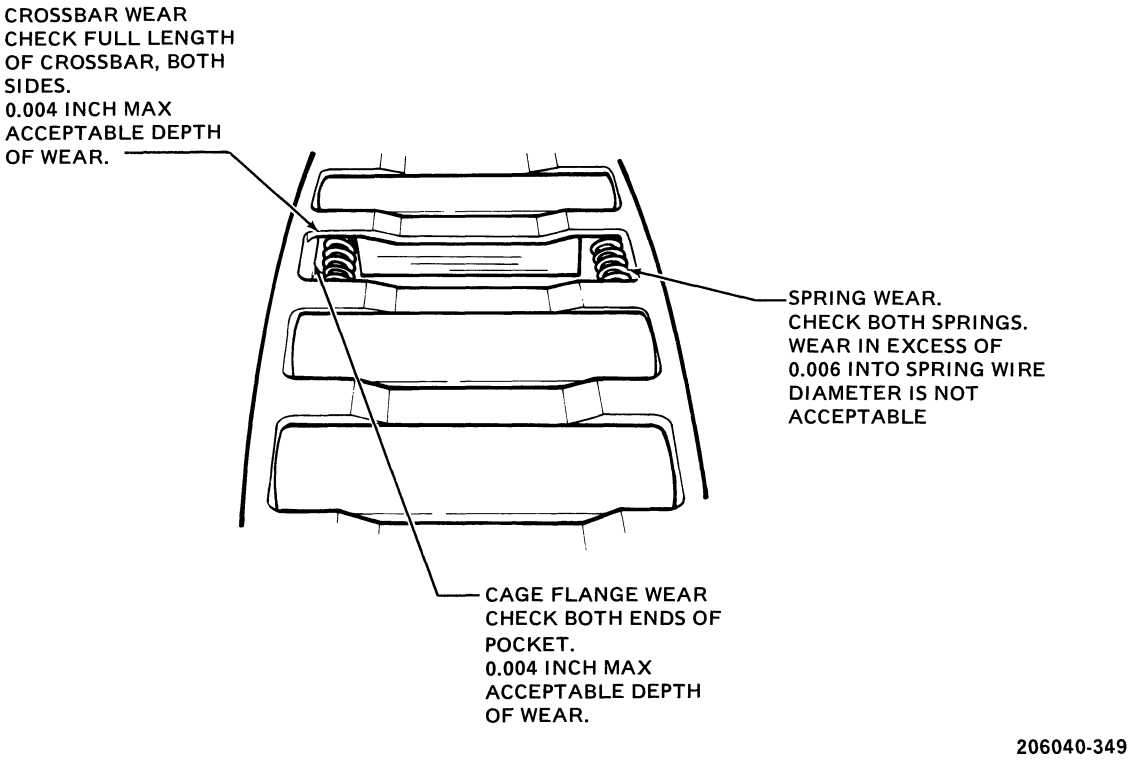

Figure 6-59E. Freewheeling clutch (CL-41742 or CL-42250) cage and spring wear

e. Visually inspect bearings (4, 9, 13, and 25) for spalling, scoring, brinelling, or corrosion damage.

f. Hold bearings (13 and 25) between fingers and roll bearings to feel for flat spots. Check for freedom of movement.

g. Visually inspect ring (18) for wear or damage.

h. Visually inspect studs (19) on housing assembly (20) for security and thread damage.

i. Visually inspect inserts (5) in cap assembly (6) for security and thread damage.

j. Dimensionally inspect worn parts, using dimensions listed on figure 6-59F (Refer to second Note above paragraph 6-188.)

k. Refer to Section I, SPECIAL INSPECTION — ACCEPTANCE STANDARDS, for Magnetic Particle or Fluorescent Penetrant Inspection Criteria.

l. Inspect parts for corrosion in accordance with paragraph 6-188D and figure 6-59G.

6-188D. INSPECTION — FREEWHEELING ASSEMBLY (206-040-270) CORROSION DAMAGE.

a. Replace forward or aft housings, or cap assembly if bearing liners are loose or if threads or inserts are structurally damaged and impractical to repair. (See figure 6-59G)

b. Replace aluminum or magnesium parts that have corrosion damage in critical areas which would affect the function or structural integrity of the part or if damage exceeds the following limits for areas shown on figure 6-59G.

c. The areas of the freewheeling assemblies most frequently damaged by corrosion are illustrated on figure 6-59G. The acceptable limits of depth of pitting and of percentage of area pitted (i.e., the percent of area in which the original machined surface has been removed by corrosion) are as follows:

(1) Forward Housing. In areas (C and D, figure 6-59G), the maximum depth of pitting is 0.020 inch and no more than 40 percent of the area of any 1.0 inch square nor 20 percent of the total area of any surface or diameter should be pitted. Area **C** should be inspected carefully prior to any corrosion removal for evidence of corrosion in the threads between the studs and case. Any corrosion in the threads of the case is cause for rejection of the part. The area inside bolt holes, through surface **D**, maximum depth of ptting is 0.030 inch and no more than 20 percent of the area of the wall of the hole shall be pitted.

(2) Forward Cap. In areas (A and B, figure 6-59G), the maximum depth of pitting is 0.030 inch and no more than 40 percent of the area in any 1.0 inch square nor 20 percent of the total area of any surface or diameters should be pitted.

(3) Aft Housing. In areas (E, F, and G, figure 6-59G), the maximum depth of pitting is 0.030 inch and no more than 40 percent of the area within any 1.0 inch square nor 20 percent of the total area of any diameter or surface should be pitted.

6-188E. REPAIR — FREEWHEELING ASSEMBLY (206-040-270) CORROSION DAMAGE.

a. Corrosion in areas (C, D, E, F, and G, figure 6-59G), or on the walls of bolt holes should be removed by immersion in a hot chromic acid bath rather than by mechanical means. It is mandatory that all corrosion products be removed. (Refer to paragraph 6-95b, for touchup treatment of magnesium parts.)

b. In areas (F, figure 6-59G), if no pitting is present in the area contacted by the washers, corrosion may be removed by acid bath as described in step a. above. If this area is pitted, then surface may be machined off. Use mill cutter of same diameter and having same corner radius as originally used.

Note

Minimum dimension after repair at point (X, figure 6-59G) is 0.273 inch. Rework in either area must cleanup sufficiently that washers will contact aft housing for the entire 360 degrees around each stud for at least 50 percent of the washer width at any point. No more than 10 percent of the area normally contacted by the washers may be pitted. Maximum depth of pitting after rework is 0.010 inch. Surface finish in reworked areas must be 63 RMS or better.

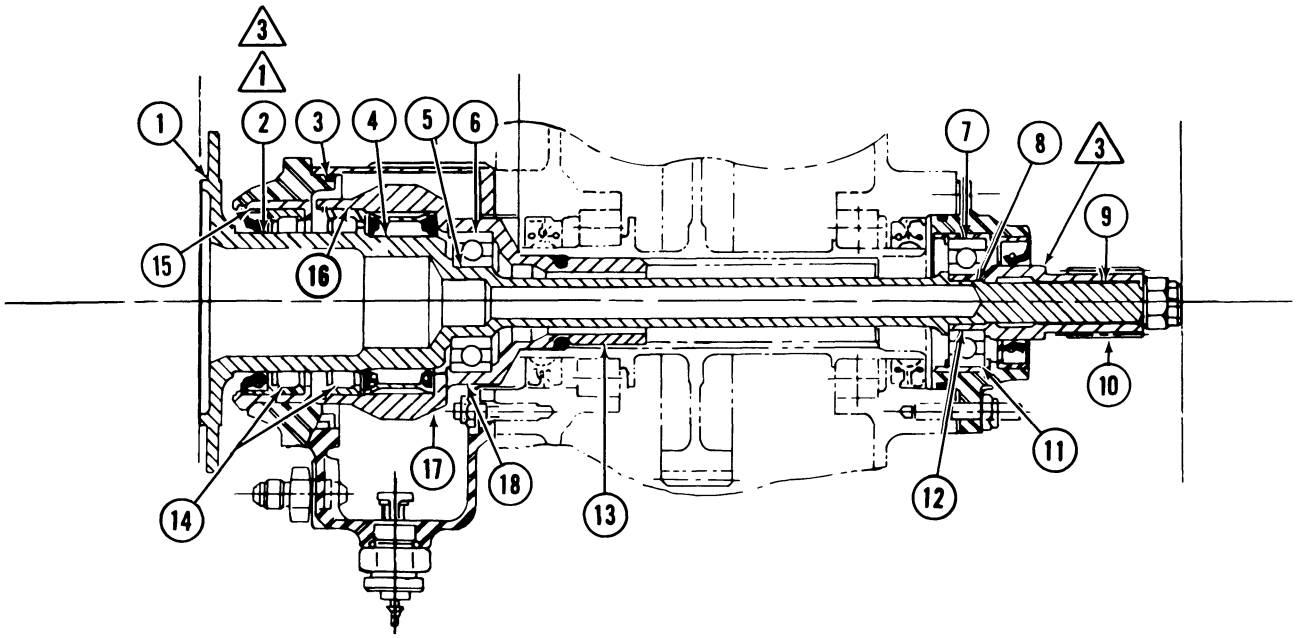

ITEM	NOMENCLATURE		MIN.	MAX.
			INCHES	
1.	Shaft Assy, Inner Race — Adapter Flange Shoulder	OD	3.4345	3.436
2.	Shaft Assembly, Inner Race — Seal and Forward Bearing Seat (3)	OD	2.0010	2.0015 (1)
3.	Housing Assembly — Cap Assembly Seat	ID	3.626	3.627
4.	Shaft Assembly, Inner Race — Clutch Assembly Seat	OD	1.9560 (4)	1.9577
5.	Shaft Assembly, Inner Race — Ball Bearing Set	OD	0.9841	0.9848
6.	Ball Bearing	OD	2.0467	2.0472
		ID	0.9841	0.9844
7.	Housing — Aft Ball Bearing Liner	ID	1.8498	1.8506
8.	Shaft Assembly, Inner Race — Adapter Shoulder	OD	0.6325	0.6340
9.	Shaft Assembly, Inner Race — Splines (Use 0.1200 Inch Dia. Pins)	Over Pins	0.7279	
10.	Adapter, Tail Rotor Drive Splines (Use 0.1200 Inch Dia. Pins)	OD	1.1025 (2)	1.1100
	(Use 0.1080 Inch Diameter Pins)	ID	—	0.3979
11.	Ball Bearing	OD	1.8500	1.8504
		ID	0.7872	0.7875
12.	Adapter, Tail Rotor Drive — Mating Bore	ID	0.6345	0.6360
		OD	0.7874	0.7880
13.	Shaft Assembly, Outer Race — Splines (Use 0.0960 Inch Dia. Pins)	Over Pins	1.3446	1.3471
14.	Roller Bearing (Two Required)	OD	2.6767	2.6772
15.	Cap Assembly — Bearing Liner	ID	2.6766	2.6774
16.	Shaft Assy, Outer Race — Roller Bearing Seat	ID	2.6766	2.6774
17.	Shaft Assembly, Outer Race — Clutch Assembly Outer Race	ID	2.6130	2.6145
18.	Shaft Assembly, Outer Race — Ball Bearing Seat	ID	2.0465	2.0473

NOTES

(1) Maximum allowable wear in roller bearing path on the diameter is 0.0002 inch, determined by the difference in the diameters in the worn and unworn area.

(2) Dress out wear step between worn and unworn areas of spline teeth with india stone or equivalent to form a smooth transition.

(3) Maximum allowable wear in seal path is 0.002 inch deep, determined by the difference in the diameters in the worn and unworn area.

(4) Measured at center of clutch path. Maximum taper is 0.0003 inch.

206040-398

Figure 6-59F. Freewheeling assembly (206-040-270) — limits chart

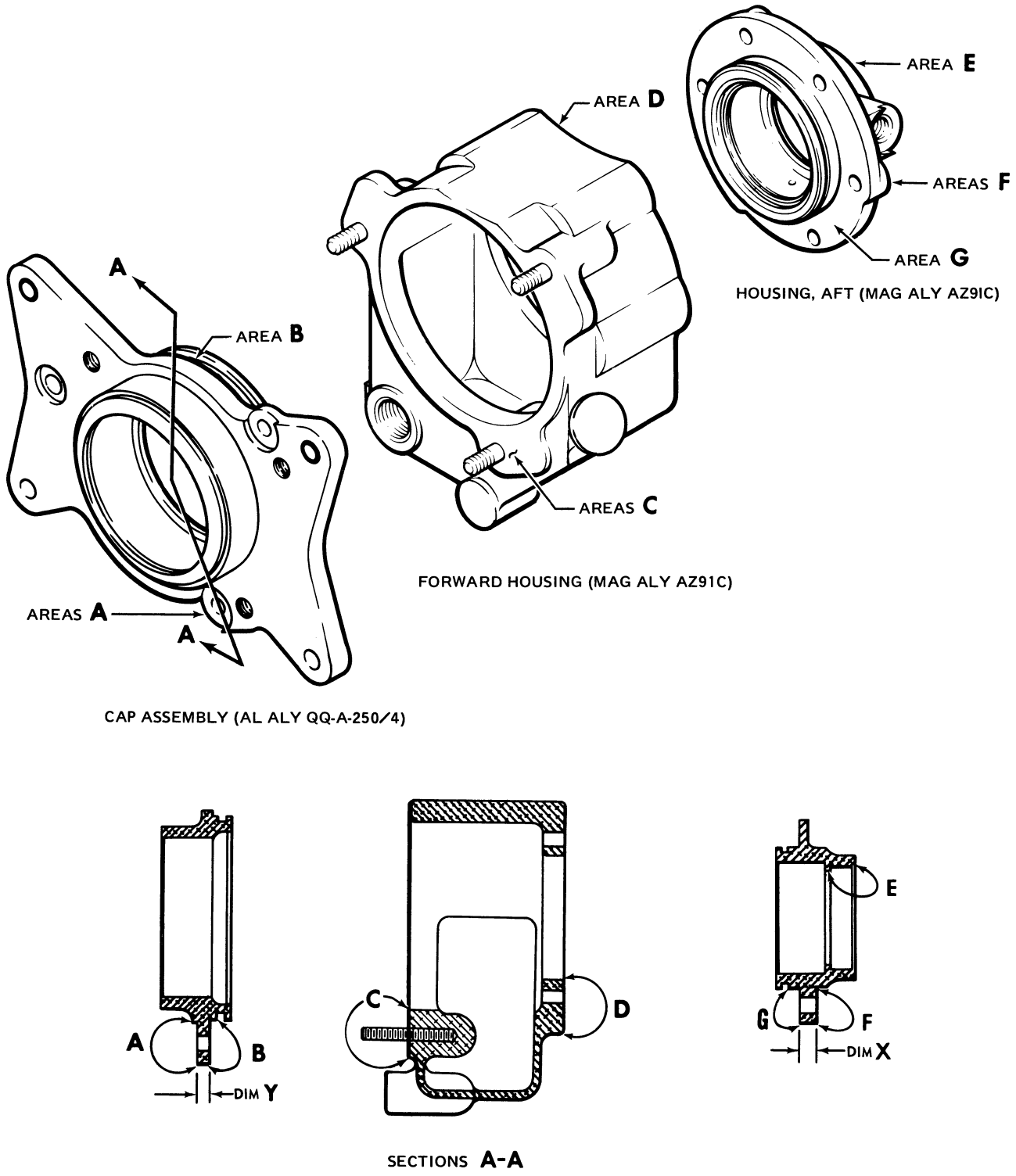

Figure 6-59G. Freewheeling assembly (206-040-270) — corrosion damage limits

c. Inspect magnesium parts after repair for sharp edges which may damage packings during reassembly.

Note

Corrosion products must be completely removed prior to subsequent corrosion protection treatments. Corrosion removal process must be controlled, and treated parts monitored to ensure that machined dimensions are maintained, and that plating is not removed from cadmium plated parts.

d. Magnesium parts must be treated for corrosion protection after rework or corrosion removal, by touching up per Dow No. 19, or treat entire part per Dow No. 7. (Refer to paragraph 6-95 , for touchup treatment of magnesium parts.)

e. In areas (A and B, figure 6-59G) inspect surfaces for nicks, scratches, and corrosion. If nicks or scratches are present blend smooth with No. 400 grit abrasive paper (item 15) and treat repair surfaces in accordance step f. below. Remove corrosion using scotch-brite (item 9) or fine aluminum wool (item 91). Brush repair area with a 30 percent solution of Turco-WO No. 1 (item 33), or similar alcoholic-phosphoric solution.

f. Apply alodine chemical film treatment (item 6 or 32) to repaired areas. Apply paint finish to exterior surfaces in accordance with paragraph 6-187 and table 6-6B .

6-188F. REPAIR OR REPLACEMENT — FREEWHEELING ASSEMBLY (206-040-270).

a. Replace all packings and seals upon reassembly.

b. Replace parts that are cracked, broken, warped, distorted, or have malformed threads.

c. Replace all parts that exceed allowable tolerance listed in limits chart. (See figure 6-59F)

d. Dress out minor nicks, scratches, or burrs on inner and outer race shaft assemblies (1 and 14, figure 6-59) and adapter (28) with a fine India stone (item 95). If sufficient material is removed to exceed limits of figure 6-59F the effected part must be replaced.

(1) Clean the inside diameter of the inner shaft with MEK, using clean rags, until all evidence of dirt or oil is removed.

Note

There will likely be some evidence of a reddish brown residue removed during the cleaning process. This normally will be residual deposits from black oxide process accomplished during manufacture of parts.

(2) If excessive residue is noted, or corrosion is suspected, clean out the inside diameter of the shaft with a wire brush. Finish cleaning the I.D. with a clean cloth and MEK.

(3) Inspect internal surfaces for pits.

(4) Flow polyamide epoxy primer into the bore while rotating the shaft. Ensure coverage of all internal surfaces.

(5) Position freewheeling shaft upright, drain primer, and allow remaining primer to air dry. Clean primer from outboard face of inner shaft adapter flange.

e. Replace bearings that show evidence of brinelling, spalling, scoring, corrosion, discoloration from overheating, or that do not operate smoothly.

f. Repair minor scratches, nicks, or pits on non-critical surfaces with abrasive cloth (item 13).

g. Repair corrosion damage on aluminum or magnesium parts in accordance with paragraph 6-188E.

h. Replace broken, bent, damaged, or loose studs in housing assembly (20, figure 6-59) in accordance with paragraph 6-184 and table 6-6A.

6-188G. REASSEMBLY — FREEWHEELING ASSEMBLY (206-040-270).

a. Reassemble housing assembly (20, figure 6-59) as follows:

(1) Lubricate new packings (17 and 22) with turbine oil (item 20, table 1-1).

(2) Insert packing (17, figure 6-59) on union (16), and packing (22) on self-closing valve (23) and install in housing assembly (20).

(3) Tighten union (16) to standard torque and self-closing valve (23) to a torque of 75 to 125

inch-pounds. Secure self-closing valve to housing with 0.032 inch lockwire (item 19).

(4) Position ring (18, figure 6-59) inside housing assembly (20). Align bolt holes and using suitable pressing plate, press into place.

b. Reassemble cap assembly (6) as follows:

(1) Apply a heat lamp to front surface of cap assembly (6). Apply a film of sealing compound (item 8) on seal (3) outside diameter. Obtain a suitable pressing plug that contacts bearing (4) outer race and press bearing (4) into cap assembly. Do not allow pressing plug to contact liner in bearing cap assembly. Press seal (3) in cap assembly in same manner the bearing (4) was pressed in cap assembly. Trim excess sealing compound.

(2) Install retaining ring (2) in forward side of cap assembly (6).

(3) Apply a film of lubricant (item 133) to lip of seal (3, figure 6-59) and packing (7). Install packing (7) in groove on inboard side of cap assembly (6).

c. Install cap assembly (6) next to adapter flange on forward end of inner race shaft assembly (1).

d. Reassemble clutch assembly (11) and, inner and outer race shaft assemblies (1 and 14) as follows:

(1) Apply a film of turbine oil (item 20) to race surfaces of inner and outer race shaft assemblies (1 and 14, figure 6-59), bearings (9 and 13), plate (10), and clutch assembly (11).

(2) Apply a heat lamp to outside diameter of outer race shaft assembly (14) and install bearing (13) and retaining ring (12). Use a suitable pressing plate to firmly seat bearing at outer race in shaft assembly.

(3) If (CL-41742 or CL-42250) clutch assembly (11) was disassembled, care must be exercised during reassembly. Ensure all parts are clean. Set cage on clean work area with arrow etched on cage pointing clockwise and install lower spring. (See figure 6-59H) Position all sprags in place over the lower spring. Take top spring in both hands and fit it into the top slots of the sprags. This will push all sprags into position with the cage.

Note

If one or two sprags come loose, check adjoining sprags for correct position and the upper and lower springs for deformation.

(4) Install clutch assembly (11, figure 6-59) with arrow etched on cage pointing clockwise as viewed from open end of outer race shaft assembly (14). Push clutch assembly into shaft assembly with hand pressure until fully seated and all sprags are properly positioned.

(5) Install plate (10) with chamfered outer edge inboard next to clutch assembly (11).

(6) Using a suitable pressing plate, press bearing (9) into outer race shaft assembly (14) and against plate (10). Secure with retaining ring (8).

(7) Reapply turbine oil (item 20) to race surfaces of inner and outer race shaft assemblies (1 and 14, figure 6-59), bearings (9 and 13), and clutch assembly (11).

(8) Install (Owatonna No. 951) tool around outer race shaft assembly (14) and position on arbor press. (See figure 6-58C, for tool application.) Insert inner race shaft assembly (1, figure 6-59) in outer race shaft assembly (14). Rotate inner race shaft assembly in left hand or counter-clockwise direction by hand to pass sprags in clutch assembly (11). Do not use arbor press until inner race shaft assembly has engaged inner race of bearing (13).

(9) Apply turbine oil (item 20, table 1-1) to new packing (15, figure 6-59) and install in groove above splines on outer race shaft assembly (14).

(10) Check clutch assembly (11) for proper operation. Hold outer race shaft assembly (14) with flange end of inner race shaft assembly (1) towards you. Rotate flange end of inner race shaft assembly clockwise and clutch assembly should drive; rotate counter-clockwise and clutch assembly should freewheel.

e. Reassemble housing (31) and adapter (28) as follows:

(1) Apply a heat lamp to housing (31). When thoroughly heated install bearing (25) in inboard side of housing and secure with retaining ring (21).

(2) Apply a film of sealing compound (item 8) on seal (27) outside diameter.

(3) Press new seal (27) into outboard side of housing (31).

(4) Apply a film of lubricant (item 26) to lip of seal (27, figure 6-59) and new packings (26 and 29). Install packing (26) in groove on inboard side of housing (31) and packing (29) on reducer (30).

(5) Apply a film of turbine oil (item 20) to inner race of bearing (25, figure 6-59) and to adapter (28). Support inner race of bearing (25) installed in housing (31) from inboard side. Using a suitable press plug, press adapter (28) through seal (27) and into inner race of bearing (25).

(6) Install reducer (30) in housing (31) and tighten to standard torque.

f. Apply a film of turbine oil (item 20) to inside diameter of ring (18, figure 6-59). Install assembled inner and outer race shaft assemblies (1 and 14) into housing assembly (20). Align cap assembly (6) to studs (19) on housing assembly and seat cap assembly. Install aluminum washer, steel washer, and new self-locking nut on each stud. Do not torque nuts.

g. Install housing (31) with adapter (28) on aft end of inner race shaft assembly (1), and install steel washer and nut. Do not torque nut.

h. Paint freewheeling assembly in accordance with paragraph 6-187 and table 6-6C .

i. Protect freewheeling assembly by covering with wrapping paper (item 98) until installation on helicopter.

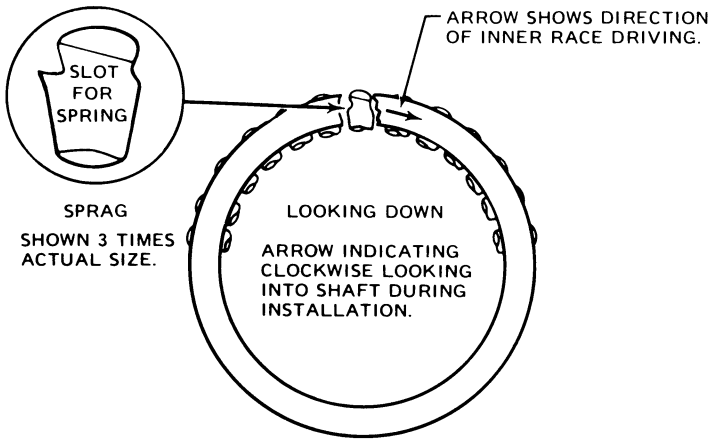

206040-340

Figure 6-59H. One-Way Clutch Assembly (CL-41742 or CL-42250)

Part 4
Overhaul — Drive Shafts and Oil Cooler Fan

Note

Screen records and retire those components which have accumulated maximum operating time or will accumulate maximum operating time before next scheduled overhaul. (Refer to Section I, MANDATORY RETIREMENT SCHEDULE.)

Note

Limits Charts, listing critical dimensions of parts, are provided as a convenience in determining closeness of fit between mating parts. They also provide replacement dimensions as a guide for replacement of worn parts. It is not intended that all dimensions listed on Limits Charts are to be checked out as prescribed overhaul procedure. Parts that have evidence of wear or physical damage will be checked dimensionally.

Note

For consumable materials item numbers, refer to Section I, CONSUMABLE MATERIALS, Table 1-1.

6-189. ENGINE TO TRANSMISSION DRIVE SHAFT OVERHAUL.

6-190. DISASSEMBLY — ENGINE TO TRANSMISSION DRIVE SHAFT. Remove and disassemble main drive shaft. (Refer to paragraphs 6-42 and 6-43.)

6-191. CLEANING — ENGINE TO TRANSMISSION DRIVE SHAFT. Clean all parts with clean wiping cloths.

a. Clean driveshaft parts, except seals, with solvent (item 12, table C-1).

b. Dry parts with filtered air.

c. Clean seals with clean, dry cloth .

6-192. INSPECTION AND REPAIR — ENGINE TO TRANSMISSION DRIVE SHAFT.

a. Visually inspect all parts for damage and wear.

b. Inspect splines of inner coupling (3, figure 6-61) for chipped, cracked, or worn teeth and for acceptable tooth wear pattern. (See figure 6-60.)

c. Inspect seal groove in each end of shaft (5, figure 6-61) adjacent to (surfaces B) to determine that surface is smooth and not damaged or corroded.

d. Roll shaft (5) on a flat surface to check for distortion. If shaft appears to be distorted verify by supporting shaft between centers and check run-out of shaft flanges with a dial indicator. Flange faces (surfaces B) to be square with diameter (surfaces A) of shaft within 0.001 inch TIR.

e. Dimensionally inspect worn parts using dimensions listed on figure 6-61 . (Refer to second Note above paragraph 6-189 .)

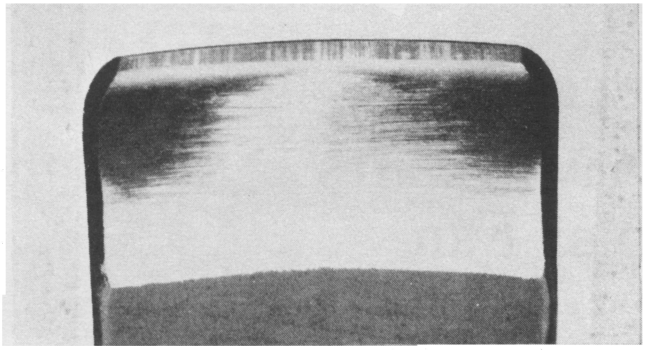

Figure 6-60. Acceptable Tooth Wear Pattern — Engine to Transmission Drive Shaft

f. Visually inspect main driveshaft for corrosion, surface damage, and for evidence of couplings overheating or grease leakage. Specifically, inspect zinc chromate paint stripes on each coupling for signs of discoloration (turned brown) due to an overheat dondition. If overheat condition is evident, couplings shall be disassembled, inspected, greased, and reassembled with serviceable parts.

(1) Check that the cadmium plated surfaces do not show signs of general discoloration or blistering. If cadmium plated surfaces have general discoloration or blistering, replace coupling (1).

(2) If coupling (1) is acceptable, replace zinc chromate primer as follows:

CAUTION

Do not allow MEK (item 17) to come in contact with packings or boots.

(a) Clean outer surface of couplings (10, figure 6-12) with MEK (item 17).

(b) Mask off OD of couplings (10) to provide two one-inch wide strips, 180 degrees apart, flange to flange, parallel to driveshaft.

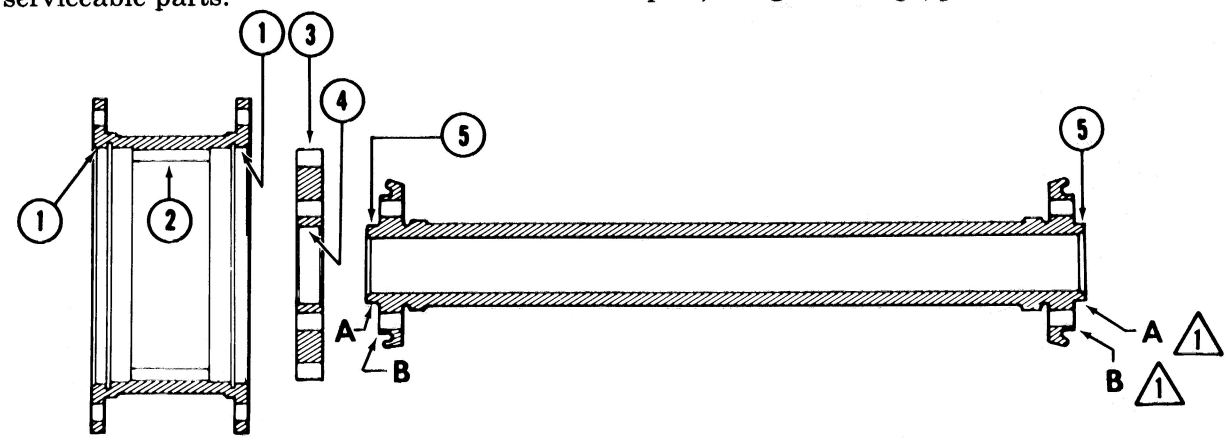

			MIN.	MAX.
			INCHES	
1.	Coupling — Adapter Alignment Seat — Spherical Outer	ID	3.4360	3.4376
2.	Coupling — Spline — Spherical Outer (Use 0.1920 inch dia. pins)	Between Pins	2.8991	2.9036 2
3.	Coupling — Spline — Spherical Inner (Use 0.2057 inch dia. pins)	Over Pins	3.3814	3.4078
4.	Coupling — Shaft Seat — Spherical Inner	ID	1.090	1.0915
5.	Shaft — Coupling Seat — Engine to Transmission	OD	1.0880	1.0900

NOTES

1 Surfaces B and B to be square with diameters A within 0.001 TIR.

2 Maximum allowable depth of wear on face of spline is 0.005 determined by measuring from worn to unworn area of spline. To accurately check for excessive wear a straight edge and wire feeler gage must be used.

206040-39G

Figure 6-61. Engine to Transmission Drive Shaft — Limits Chart

(c) Spray paint area with zinc chromate primer (item 80).

(d) Remove masking tape.

g. Inspect spline teeth of outer coupling (2, figure 6-61) in accordance with figure 6-61A. Position a metal straight edge perpendicular to face of tooth being inspected. Straight edge must be of sufficient length to extend over unworn areas. Insert a wire feeler gage into wear area and determine the amount of wear, maximum allowable is 0.005 inch. Inspect the surface of all teeth for excessive wear and accomplish the following:

(1) Outer coupling teeth worn on one side only. If outer coupling has splined teeth (or a tooth) worn more than 0.005 inch on one side, then the worn side of the teeth (or tooth) is not serviceable for continued operation on the worn side. The coupling must be either reversed (to the unworn side) or replaced. If inspection reveals wear greater than 0.005 inch but less than 0.013 inch, the coupling must be reversed (to the unworn side) to continue in service. If the wear exceeds 0.013 inch, the coupling must be replaced. When an outer coupling is reversed (to the unworn side) the mating inner coupling should also be reversed.

(2) Outer coupling teeth worn on both sides more than 0.005 inch must be replaced.

h. Inspect shaft centering spring for free standing height of approximately 1.900 inches.

i. Refer to Section I, SPECIAL INSPECTION — ACCEPTANCE STANDARDS, for Magnetic Particle or Fluorescent Penetrant Inspect Criteria.

j. Inspect parts for nicks and scratches. Maximum limits are 0.002 inch deep around entire circumference or 0.005 inch deep, axial or circumferential but no longer than 25 percent of circumference. Dress out acceptable damage with No. 320 or 400 grit abrasive cloth (item 13, table 1-1) or a fine India stone (item 95, table 1-1), as required. Apply brush cadmium plate (item 58, table 1-1) to repaired areas.

k. Remove any corrosion from inside diameter of shaft by honing to maximum diameter of 0.838 inch. Protect reworked area by filling and draining with primer (items 4, 56, and 80). Stand shaft on end while draining to avoid causing imbalance.

l. Replace all unserviceable parts including packings and nuts.

6-193. REASSEMBLY — ENGINE TO TRANSMISSION DRIVE SHAFT. (Reassemble and install main drive shaft. (Refer to paragraphs 6-45 and 6-46)

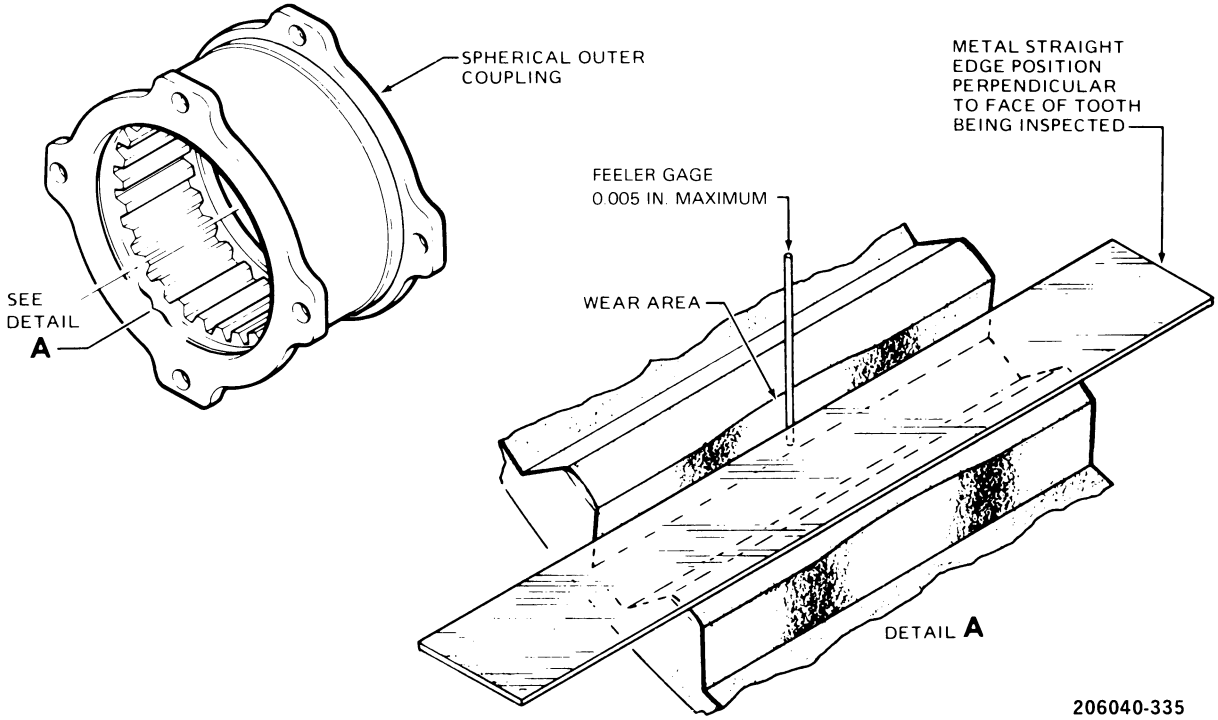

Figure 6-61A. Spherical Outer Coupling Spline Teeth — Inspection

6-194. TAIL ROTOR DRIVE SHAFT OVERHAUL

6-195. REMOVAL AND DISASSEMBLY — TAIL ROTOR DRIVE SHAFT.

a. For removal of forward and aft short tail rotor drive shaft refer to paragraph 6-57 and see figure 6-15.

b. For removal and disassembly of long tail rotor drive shaft incorporating clamp type bearing hangers with shims, refer to paragraph 6-59 and see figure 6-17.

c. For removal and disassembly of long tail rotor drive shaft incorporating clamp type bearing hangers with springs, refer to paragraph 6-60 and see figure 6-18.

d. For removal of segmented tail rotor drive shaft, refer to paragraph 6-61. For disassembly of drive shaft segments, refer to paragraph 6-62.

6-196. CLEANING – TAIL ROTOR DRIVE SHAFT. Clean all parts except bearings with cleaning solvent (item 12, table 1-1). Dry with filtered compressed air. Do not allow solvent to contact bearings.

6-197. INSPECTION — TAIL ROTOR DRIVE SHAFT.

a. Visually inspect all parts for serviceability. Refer to paragraph 6-63 for inspection and repair.

b. Refer to Section I, SPECIAL INSPECTION – ACCEPTANCE STANDARDS, for Magnetic Particle or Fluorescent Penetrant Inspection Criteria.

c. Forward and aft short shafts. Dimensionally inspect parts that are worn or damaged using dimensions shown on figure 6-62. (Refer to second Note above paragraph 6-189.)

d. Long tail rotor drive. Dimensionally inspect parts that are worn or damaged using dimensions shown on figure 6-62. (Refer to second Note above paragraph 6-189.)

(1) Inspect bearing hangers as follows:

(a) Insert a 0.0600 to 0.0605 inch test shim at split in bearing hanger. Tighten bolt or nut and check spherical I.D. per figure 6-62.

(b) Check diameter of bearing hanger bushing bores. (See figure 6-62.) Replace parts that exceed limits.

(c) Inspect clamp type bearing hanger for damage. (See figure 6-63.)

(2) Inspect spherical sealed bearings for serviceability. (Refer to paragraph 6-63.)

e. Segmented tail rotor drive shafts. Dimensionally inspect parts that show wear using dimensions shown on figure 6-64. Replace parts that exceed limits. Inspect parts for damage in accordance with figures 6-63, 6-65 and 6-66.

6-198. INSTALLATION — TAIL ROTOR DRIVE SHAFT.

a. For installation of forward and aft short tail rotor drive shaft refer to paragraph 6-64 and see figure 6-15.

b. For installation of long tail rotor drive shaft incorporating clamping type bearing hangers with shims, refer to paragraph 6-66 and see figure 6-17.

c. For installation of long tail rotor drive shaft incorporating clamp type bearing hangers with springs, refer to paragraph 6-67 and see figure 6-18.

d. For installation of segmented tail rotor drive shafts, refer to paragraph 6-68 and see figure 6-19.

e. Apply corrosion protective coating to installed tail rotor drive shaft. (Refer to paragraph 6-69.)

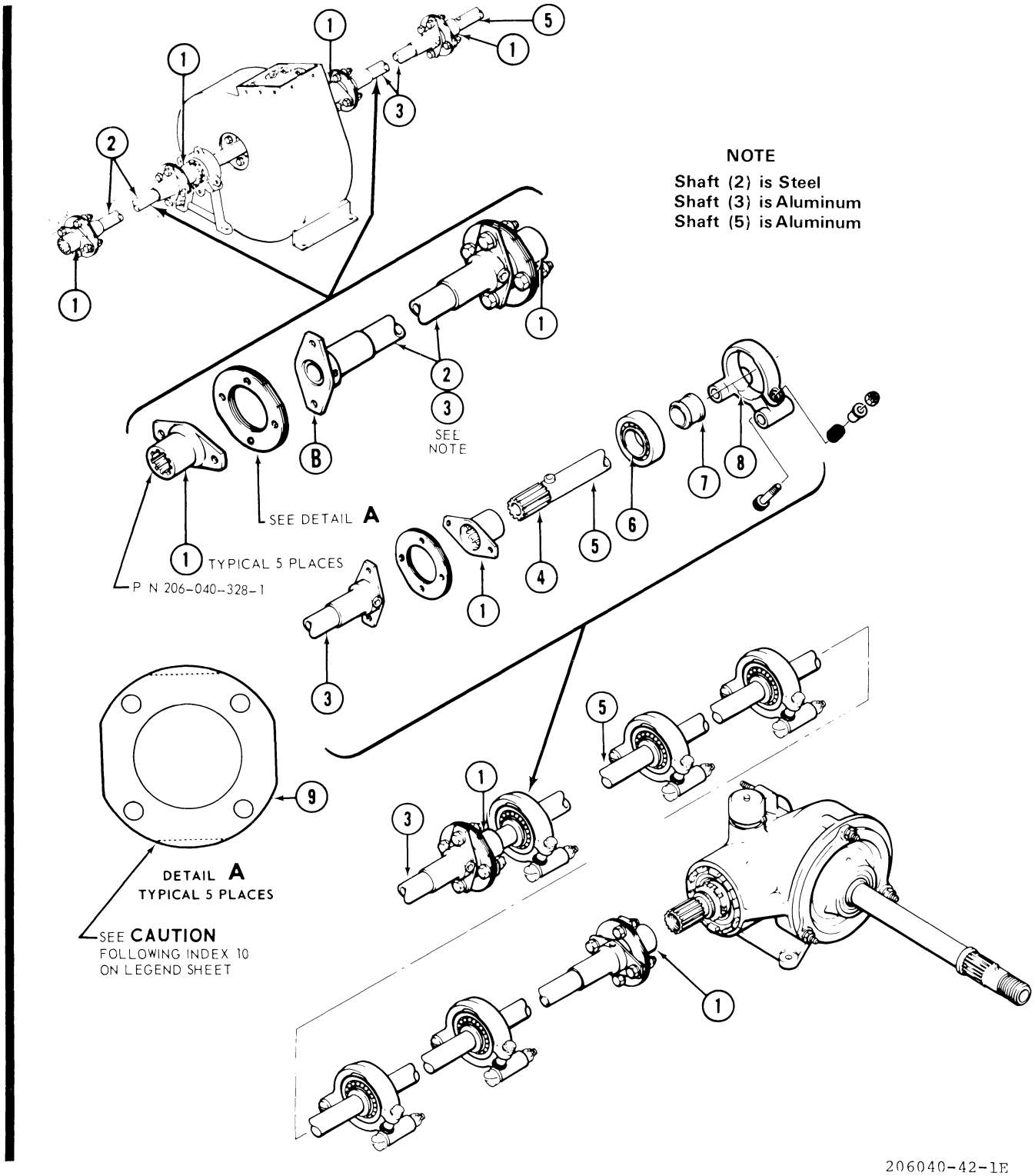

Figure 6-62. Tail Rotor Drive Shafts — Limits Chart (Sheet 1 of 2)

ITEM	NOMENCLATURE		MIN (INCHES)	MAX (INCHES)
1	Splined Adapter **(Use 0.1200 inch diameter pins to check spline wear.)**	ID		0.7414
2	Steel Short Shaft a. Flange adapter faces to be square with axis of shaft assembly determined by flange bolt circles within dimension shown. b. Surface of shaft to be smooth and unmarred. Scratches up to 0.002 inch deep around entire circumference may be blended out with maximum stock removal not to exceed 0.003 inch. Scratches up to 0.005 inch deep, axial or circumferential but not longer than 25 percent of circumference, may be blended with maximum stock removal not to exceed 0.006 inch.			0.004 TIR
3	Aluminum Short Shaft a. Flange adapter faces to be square with axis of shaft assembly within dimension shown. (Measure runout at a point on flange adapter one inch from center of adapter.) b. Surface of shaft to be smooth and unmarred. Scratch damage limits and blendout limits are the same as limits for steel short shaft (2).			0.002 in. in.
4	Long Shaft — Adapter Splines a. Adapter (4) is located on forward end of long shaft. Use 0.120 inch diameter pins to check spline wear. b. Check runout of splined fitting to OD of shaft (within 2.0 inches from forward end of shaft, not fitting) must not exceed 0.004 inch T.I.R. including parallelism.	OD	1.1025 ⚠1	
5	Long Shaft a. Flange adapter at aft end of shaft. Flange face to be square with axis of shaft assembly within dimension shown. (Measure runout at a point on flange adapter one inch from center of adapter.) b. Surface of shaft to be smooth and unmarred. Scratch damage limits and blendout limits are the same as limits for steel short shaft (2). c. Maximum wear on diameter beneath bearing collar (8) is 0.006 inch determined by measuring the difference in the diameter in the worn and unworn area.			0.002 in. in.
6	Bearing, Spherical OD	ID OD	1.1807 2.1637	1.1815 2.1657
7	Collar Replace when material is hard and/or cracked. Press collar between thumb and finger to check for cracks.			
8	Bearing Hanger Bushing Bore	ID ID	2.1649 0.3775	2.1670 0.3810
9	Disc Assembly Inspect the coupling discs for cracks, wear, or damage. Old and new discs should not be mixed together, except that unserviceable single discs may be replaced by new discs as required. When disc pack is installed, check for gaps between discs. Gaps of more than 0.005 inch are not acceptable. If gaps are excessive, loosen bolts, rotate discs back and forth, and then uniformly tighten up bolts. Recheck for gaps. When discs are in an assembly, the thickness is 0.115 to 0.127. The disc assemblies vary between 9 to 12 plates. Thickness of each plate varies between 0.010 to 0.014.			

CAUTION

After a disc assembly has been run on a helicopter, discs should not be changed from original pack except that unserviceable single discs may be replaced by new discs as required.

The grain of each disc runs parallel to the indexing flat edges. When assembling disc pack assembly, it is necessary to alternate indexing flats to obtain alternate grain direction. Discs should not be changed from original pack except that unserviceable discs may be replaced as required.

NOTE:

⚠1 Dress out wear step between worn and unworn areas of spline teeth with India stone or equivalent to form a smooth transition.

206040-402

Figure 6-62. Tail Rotor Driveshafts — Limits Chart (Sheet 2 of 2)

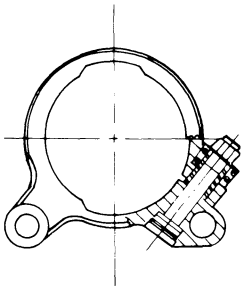

BEARING HANGER
206-040-338

TYPE OF DAMAGE	MAXIMUM DAMAGE AND REPAIR
Mechanical	Scratches up to 0.003 inch deep located on the spherical (ID) may be blended out provided that stock removal does not exceed 0.004 inch.
Corrosion	Scratches, nicks and corrosion may be removed from the exterior surfaces of the bearing hanger provided that stock removal does not exceed 0.010 inch.
	Any damage or repair to anodized finish requires chemical film treatment.

206040-222

Figure 6-63. Tail Rotor Drive Shaft (Clamp Type) Bearing Hanger — Damage Limits

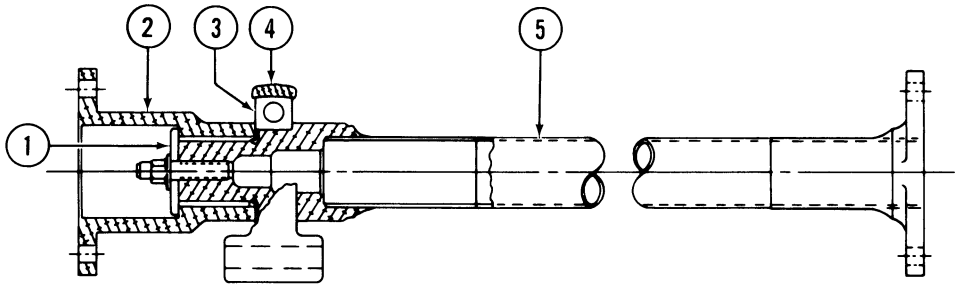

ITEM	NOMENCLATURE		MIN.	MAX.
			INCHES	
1	Plate (Thickness)		0.080	0.110
2	Splined Adapter Dimension between 0.1200 inch Diameter pins on splines			0.7414
	Runout from flange surface where disk assembly mounts	TIR		0.004
	Diameter of bolt holes		0.2505	0.2540
	Runout between bearing clamping surface	TIR		0.004
3	Sealed Bearing	ID	1.1807	1.1815
	Spherical	OD	2.1637	2.1657
4	Bearing Hanger Spherical ID with 0.0600 to 0.0605 inch space at split		2.1649	2.1670
	Diameter of bushing bores		0.3775	0.3810
5	Shaft Assembly Dimension over 0.1200 inch diameter pins on spline		1.1070	
	Bearing journal diameter		1.1803	1.1810
	Runout of bonded flange adapter to shaft centerline (measure at a radius of 1.0 inch from shaft centerline	TIR	—	0.004

206040-223C

Figure 6-64. Segmented Tail Rotor Drive Shaft — Limits Chart

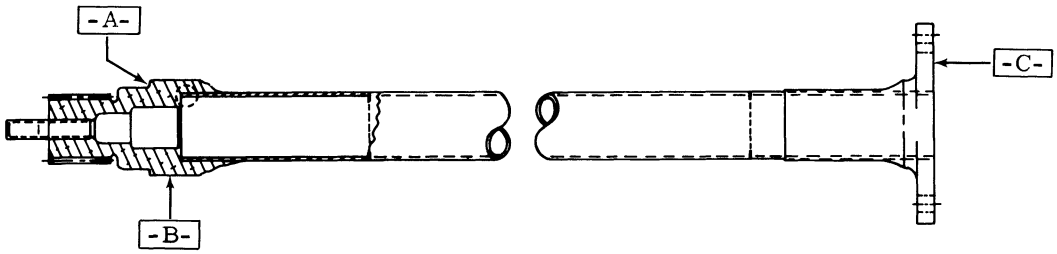

TAIL ROTOR DRIVE SHAFT SEGMENTS
206-040-931-9 and -11

TYPE OF DAMAGE	DAMAGE LOCATION SYMBOLS -A- -B- -C- MAXIMUM DAMAGE AND REPAIR DEPTH
Mechanical	Scratches up to 0.002 inch deep around entire circumference may be blended out provided stock removal does not exceed 0.003 inch. Scratches up to 0.005 inch deep, axial or circumferential, but not longer than 25 percent of the circumference, may be blended out provided that stock removal does not exceed 0.006 inch.
Corrosion	When corrosion is removed from diameter -B- , surfaces -A- and -C- , caution must be used to ensure that 0.002 to 0.004 inch (TIR) runout of surfaces is not exceeded. Corrosion pitting must be polished out with fine abrasive cloth (item 15, table 1-1). Maximum depth of stock removal for cleanup of corrosion pitting shall not exceed 0.006 inch. Any damage or repair to anodized finish requires chemical film treatment (item 6 or 32, table 1-1).
Edge Chamfer to Remove Damage	Nicks may be removed from corners using a chamfer of 0.030 inch by 40 to 50 degrees, whose total length when blended to the existing surface shall not exceed 0.50 inch provided that no more than two such repairs are located in the same quadrant of the shaft.

206040-213

Figure 6-65. Segmented Tail Rotor Drive Shaft — Damage Limits

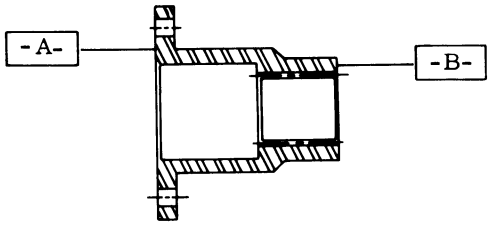

SPLINED ADAPTER
206-040-929-1 and -3

TYPE OF DAMAGE	DAMAGE LOCATION SYMBOLS -A- -B- MAXIMUM DAMAGE AND REPAIR DEPTH
Mechanical	Scratches up to 0.005 inch deep around the entire circumference may be blended out provided stock removal does not exceed 0.007 inch. Scratches up to 0.010 inch deep, axial or circumferential, not longer than 25 percent of circumference may be blended out provided stock removal does not exceed 0.012 inch.
Corrosion	When corrosion is removed from surfaces -A- and -B- , caution must be used to ensure that 0.002 to 0.004 inch (TIR) runout of flanges is not exceeded. Corrosion pitting must be polished out with fine abrasive cloth. Maximum depth of stock removal for cleanup of corrosion pitting shall not exceed 0.010 inch. Any damage or repair to anodized finish requires chemical film treatment.
Edge Chamfer to Remove Damage	Nicks may be removed from corners using a chamfer of 0.030 inch by 40 to 50 degrees, whose total length, when blended to the existing surface shall not exceed 0.50 inch provided that no more than two such repairs are located in the same quadrant on the adapter.

206040-221

Figure 6-66. Segmented Tail Rotor Drive Shaft Splined Adapter — Damage Limits

6-199. TRANSMISSION OIL COOLER FAN OVERHAUL.

6-200. REMOVAL AND DISASSEMBLY — OIL COOLER FAN.

Note

For removal and disassembly of cooling fan and shaft assembly incorporating clamp type bearing hangers, refer to paragraph 6-73 .

6-201. CLEANING OIL COOLER FAN. Clean all parts with cleaning solvent (item 12). Dry with filtered compressed air.

6-202. INSPECTION — OIL COOLER FAN.

a. Visually inspect bearing hangers for scratches, dents, nicks, cracks or other physical damage.

b. Inspect bearings for roughness and signs of overheating.

c. Inspect fan shaft for wear or physical damage. (See figure 6-67 for maximum total indicator reading (TIR).

d. Inspect impeller for cracks and other physical damage, particularly at mounting flange and individual blades. If any blades are damaged or missing, replace cooling fan assembly. Inspect braze at blade attachment points.

e. Deleted.

f. Inspect finish on impeller and if impeller requires refinishing, clean thoroughly and apply a very thin coat of epoxy polyamide primer (item 56).

Note

It is important to maintain dynamic balance of impeller wheel. Do not do anything that will disturb balance. In applying very thin uniform coat of epoxy polyamide primer (item 56) exercise care that primer does not run into corners and form thick deposits that disturb dynamic balance of impeller. Static balance impeller and oil cooler shaft. (Refer to paragraph 6-77 .)

g. Visually inspect splined adapters and flexible couplings for damage and wear.

h. Refer to Section I, SPECIAL INSPECTION – ACCEPTANCE STANDARDS, for Magnetic Particle or Fluorescent Penetrant Inspection Criteria.

i. Dimensionally inspect parts that are worn or damaged using dimensions shown on figure 6-68. (Refer to second Note above paragraph 6-189.)

j. Replace damaged or worn parts.

6-203. REASSEMBLY AND INSTALLATION — OIL COOLER FAN.

a. For reassembly and installation of cooling fan and shaft assembly incorporating clamp type bearing hangers with shims, refer to paragraphs 6-79 and 6-82 .

b. For reassembly and installation of cooling fan and shaft assembly incorporating clamp type bearing hangers with springs, refer to paragraphs 6-80 and 6-82 .

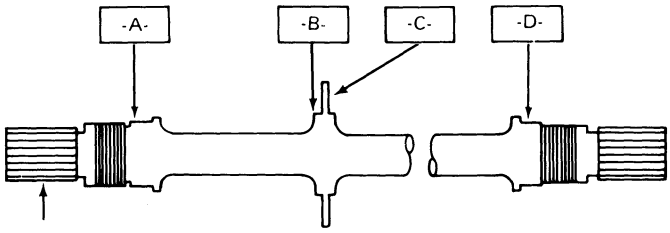

NOMENCLATURE	LOCATION	MINIMUM	MAXIMUM
Fan Shaft Runout Inspection (T.I.R. with shaft mounted on centers.)			
Surface	-A-	— —	0.0006
Surface	-B-	— —	0.0016
Surface	-C-	— —	0.0018
Surface	-D-	— —	0.0006

206040-403

Figure 6-67. Oil Cooling Fan Shaft — Limits Chart

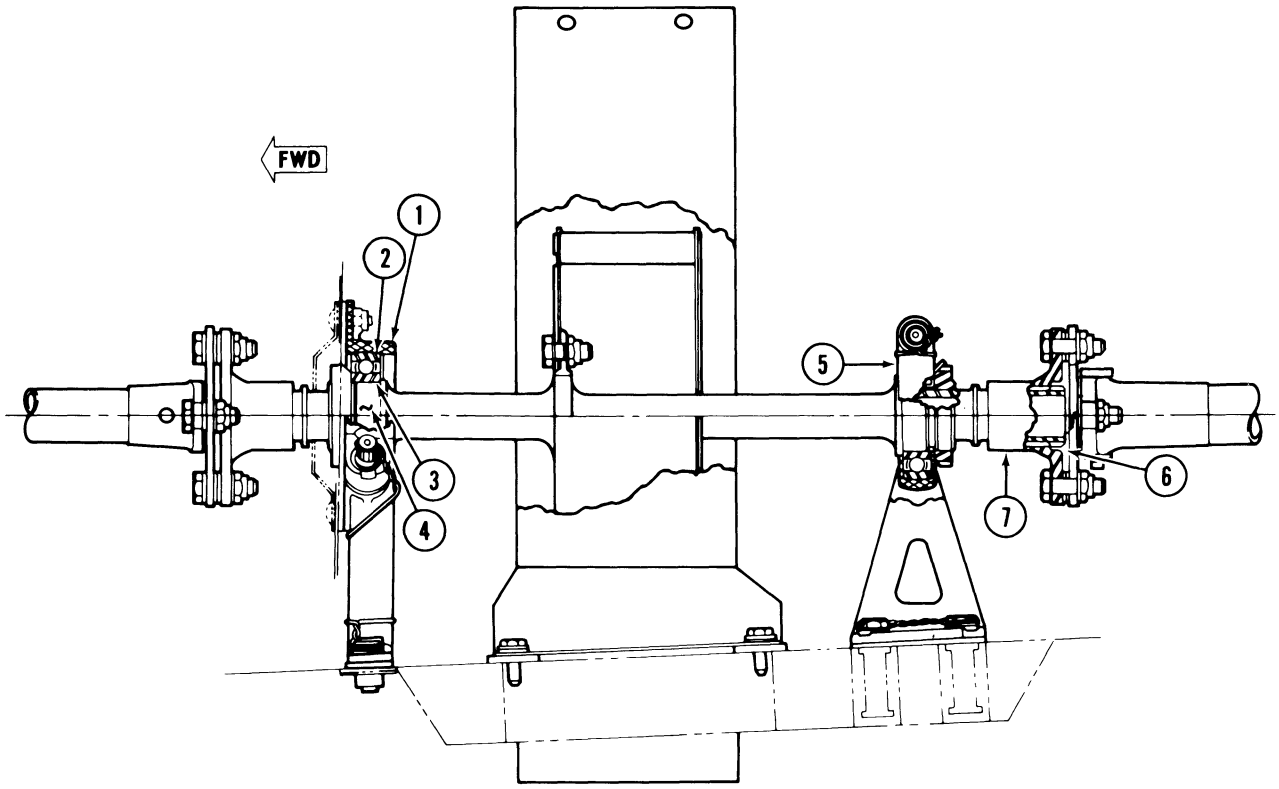

ITEM	NOMENCLATURE		MIN.	MAX.
			INCHES	
1	Forward Bearing Hanger (Spherical)	ID	2.1649	2.1670
2	Spherical Bearing, Sealed Ball (Typical Both Hangers)	OD	2.1637	2.1657
3	Spherical Bearing, Sealed Ball (Typical Both Hangers)	ID	1.1807	1.1815
4	Shaft, Bearing Seat (Typical Each End)	OD	1.1803	1.1816
5	Aft Bearing Hanger	ID	2.1649	2.1670
6	Spline, Shaft (Typical Each End) (Use 0.1200 Dia. Pins)	Over Pins	1.1025 △1	
7	Splined Adapter (Use 0.1200 Dia. Pins)	Between Pins		0.7414

Note:

△1 Dress out wear step between worn and unworn areas of spline teeth with india stone or equivalent to form a smooth transition.

206040-224F

Figure 6-68. Oil Cooling Fan Shaft and Bearing Hangers — Limits Chart

Part 5
Overhaul — Tail Rotor Gearbox

6-204. TAIL ROTOR GEARBOX OVERHAUL.

NOTE: The tail rotor gearbox may be disassembled as required, to accomplish component repair to a particular part or assembly.

6-205. DISASSEMBLY — TAIL ROTOR GEARBOX

TOOLS REQUIRED

AN8514-1	Spanner Wrench, 2 inch
Owatonna 630-3	Step Plate Adapter, 1 1/4 x 1 inch
Owatonna 927	Puller
Owatonna 927A	Puller legs, 6 3/4 inch long
Owatonna 951	Bearing Pulling Attachment
T101308	Jackscrew Set
T101507	Pinion Installation and Removal Set
T101510	Backlash Anchor Assembly
T101511	Spline Wrench
T101512	Gearbox Wrench
T101513	Output Shaft Nut Wrench
Figure 6-80	Pressing Plug (Maximum OD 0.98 inch)
Figure 6-78	Mounting Work Aid
Figure 6-74	Output Shaft Bearing Pressing Cylinder Work Aid

a. Deleted.

b. Drain oil from tail rotor gearbox case assembly (25, figure 6-69) by removing drain plug (4) and packing (40), or removing chip detector (41) with self-closing valve (43) and packings (42 and 44). (See figure 6-69 , view A and detail B, for location and configurations.)

c. Remove lock spring from splined adapter and remove adapter from shaft of the input pinion (21), if not previously accomplished.

d. Cut lockwire from input shaft nuts (29 and 31).

e. Use two offset screw drivers and lift two opposite locking tangs of lock washer (28) and force lock washer outboard to free it from input shaft inner nut (29). After washer is freed from nut, slide washer outboard and free from serrations on shaft threads. Replace lock washer with new washer on reassembly.

f. Remove input shaft inner nut (29) as follows: Clamp T101511 wrench in vise and position splined end of input shaft (21) in wrench. Use spanner wrench to remove nut (29). (See figure 6-70.)

g. Remove output shaft inner nut (2, figure 6-69) as follows: Clamp T101511 wrench in vise and position splined end of output shaft (34) in T101511 wrench. Use T101513 wrench to remove inner nut (2). (See figure 6-71)

h. Clamp tail rotor gear case (25, figure 6-69) to work bench, and use T101512 wrench to loosen and remove input bearing outer nut from gear case. (See figure 6-72 Remove O-ring and seal from nut. Use T101512 wrench to loosen and remove output shaft outer nut (1). (See figure 6-72A)

i. Keep gear case clamped to work bench.

j. With gear case clamped to work bench remove input pinion (21, figure 6-69) and duplex bearing (20) from gear case as follows:

(1) Turn T101507-5 threaded adapter into gear case. (See figure 6-73 .)

(2) Turn T101507-7 threaded adapter onto input shaft.

(3) Assemble 927 Owatonna puller and 927A legs to T101507-5 and T101507-7 adapters.

(4) Apply heat lamp to gear case and heat thoroughly.

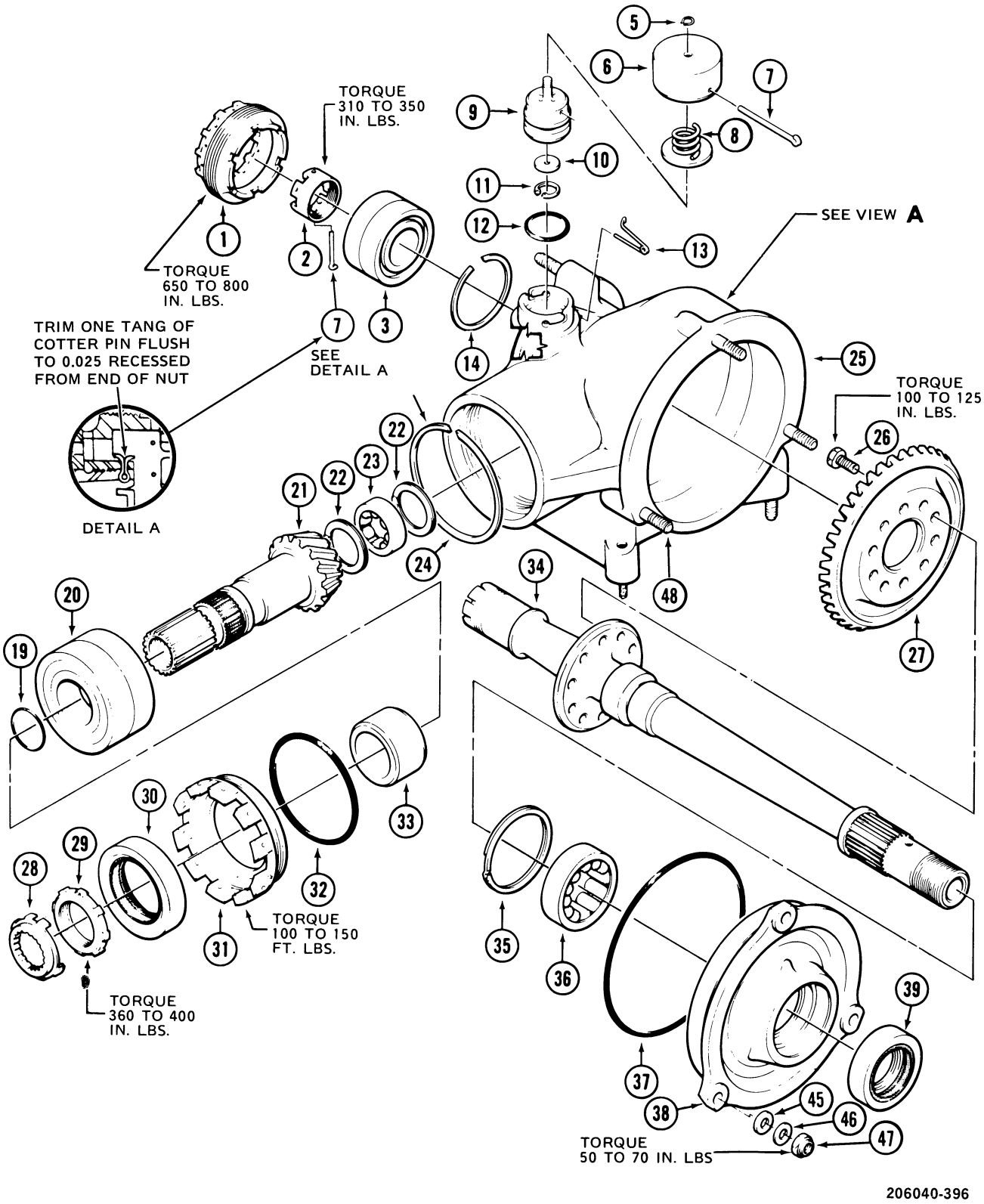

Figure 6-69. Tail Rotor Gearbox - Exploded View (Sheet 1 of 2)

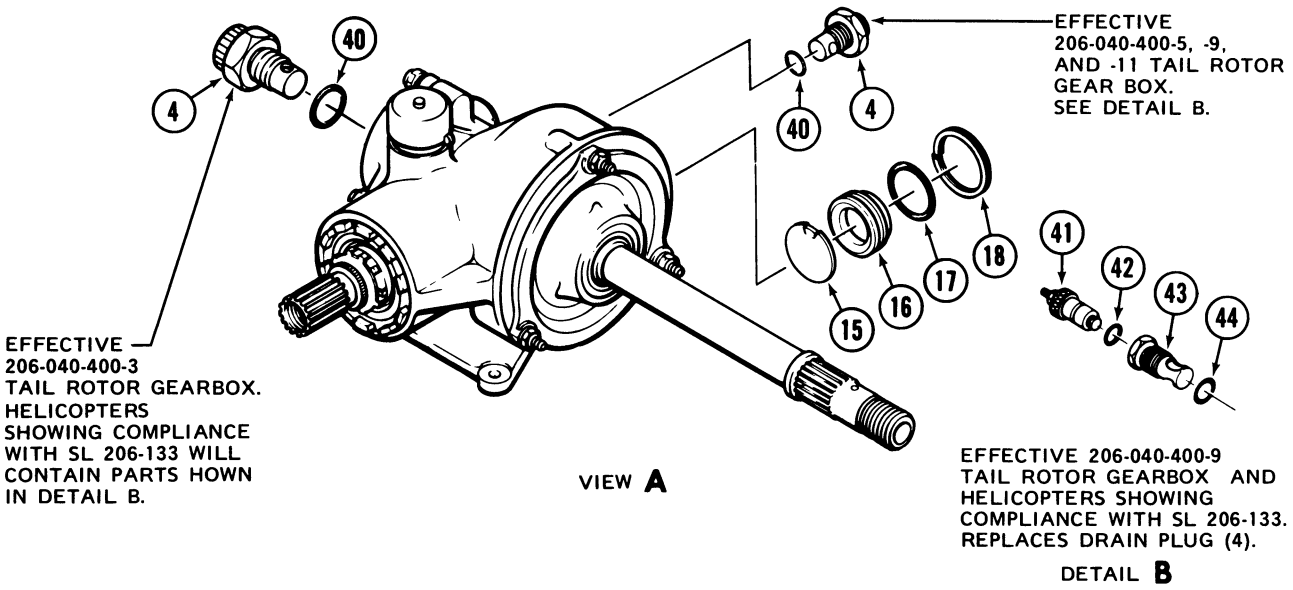

1. Nut — Output Shaft Outer
2. Nut — Output Shaft Inner
3. Duplex Bearings — Output Shaft
4. Drain Plug (B-758-R)
5. Retainer Ring
6. Cap
7. Pin
8. Spring Assembly
9. Plug
10. Washer
11. Retainer Ring
12. O-Ring
13. Pin
14. Shim Ring
15. Oil Level Indicator
16. Glass
17. O-Ring
18. Retainer Ring
19. O-Ring
20. Duplex Bearings — Input Shaft
21. Input Pinion
22. Retainer Ring
23. Roller Bearing — Input Pinion
24. Shim Ring
25. Case Assembly — Tail Rotor Gearbox
26. Bolt
27. Spiral Bevel Gear — Output
28. Lockwasher
29. Nut — Input Shaft Inner
30. Seal
31. Nut — Input Shaft Outer
32. O-Ring
33. Spacer — Input Duplex Bearings
34. Output Shaft — Tail Rotor Gearbox
35. Retainer Ring
36. Roller Bearing — Output Shaft
37. O-Ring
38. Cap Assembly — Output Shaft
39. Seal
40. Packing
41. Chip Detector
42. Packing
43. Self-Closing Valve
44. Packing
45. Washer
46. Steel Washer
47. Nut
48. Stud

206040-36-2C

Figure 6-69. Tail Rotor Gearbox - Exploded View (Sheet 2 of 2)

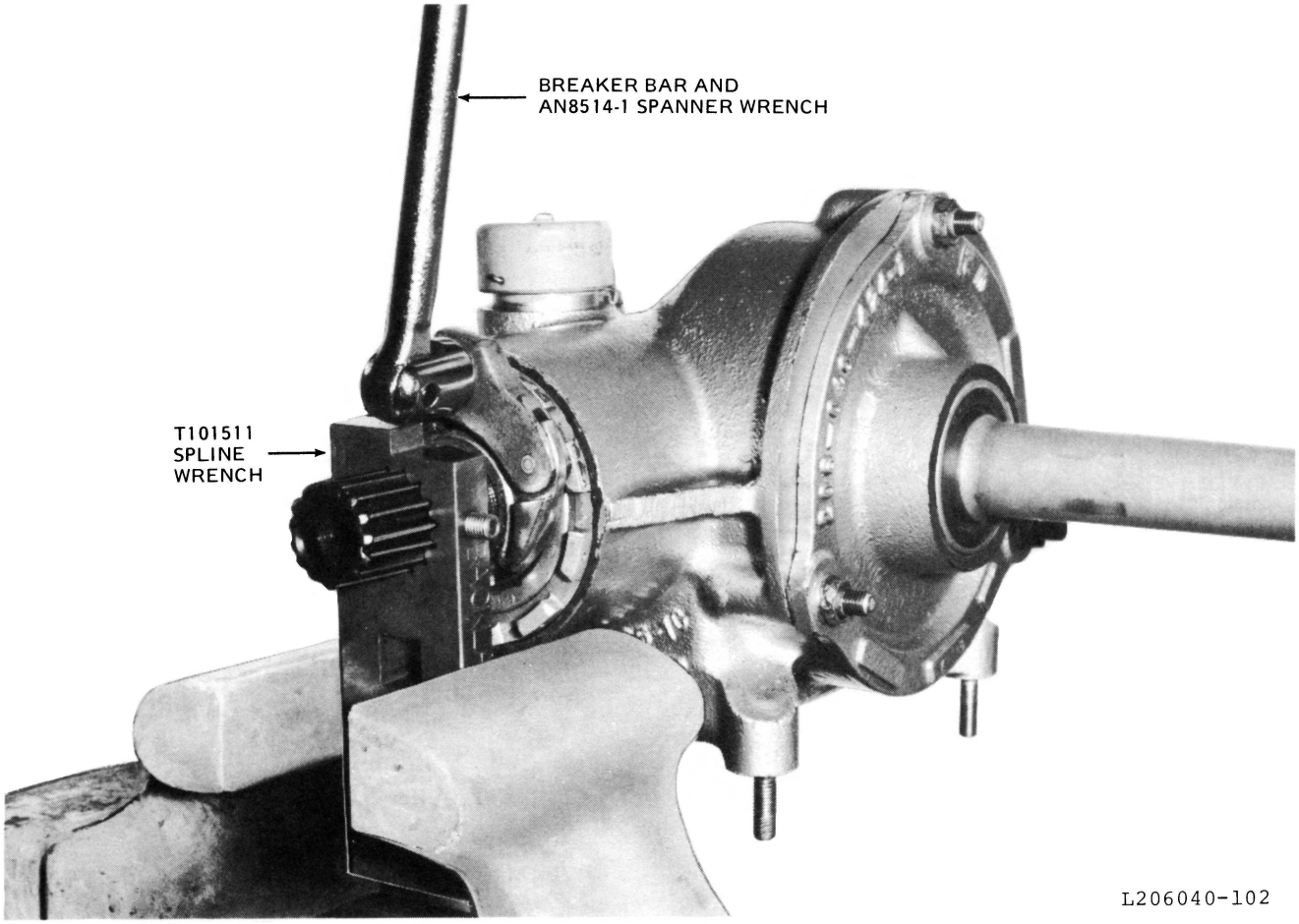

Figure 6-70. Input Pinion Inner Nut — Tool Application, T101151 and AN8514-1

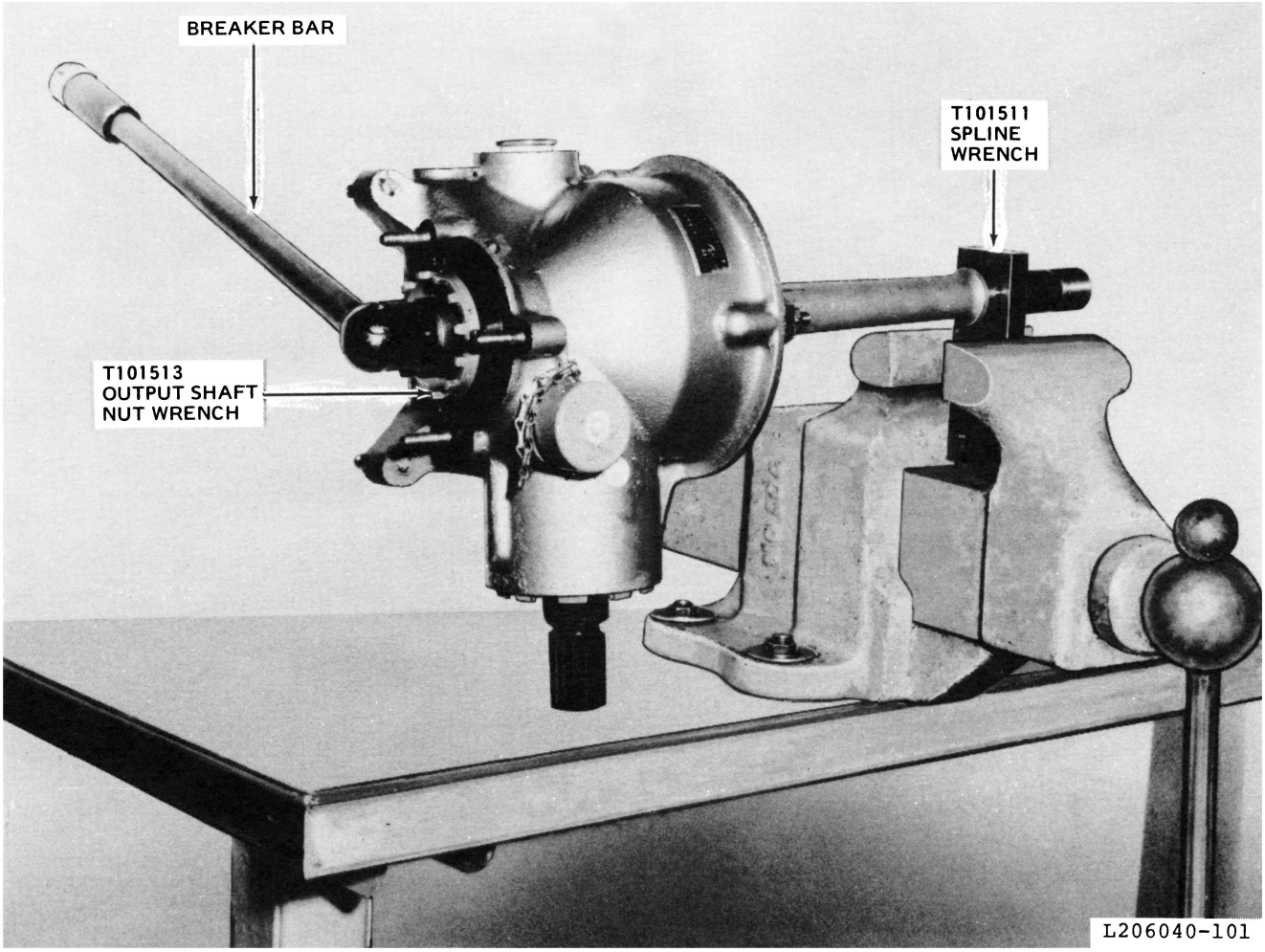

Figure 6-71. Output Shaft Inner Nut — Tool Application, T101151 and T101513

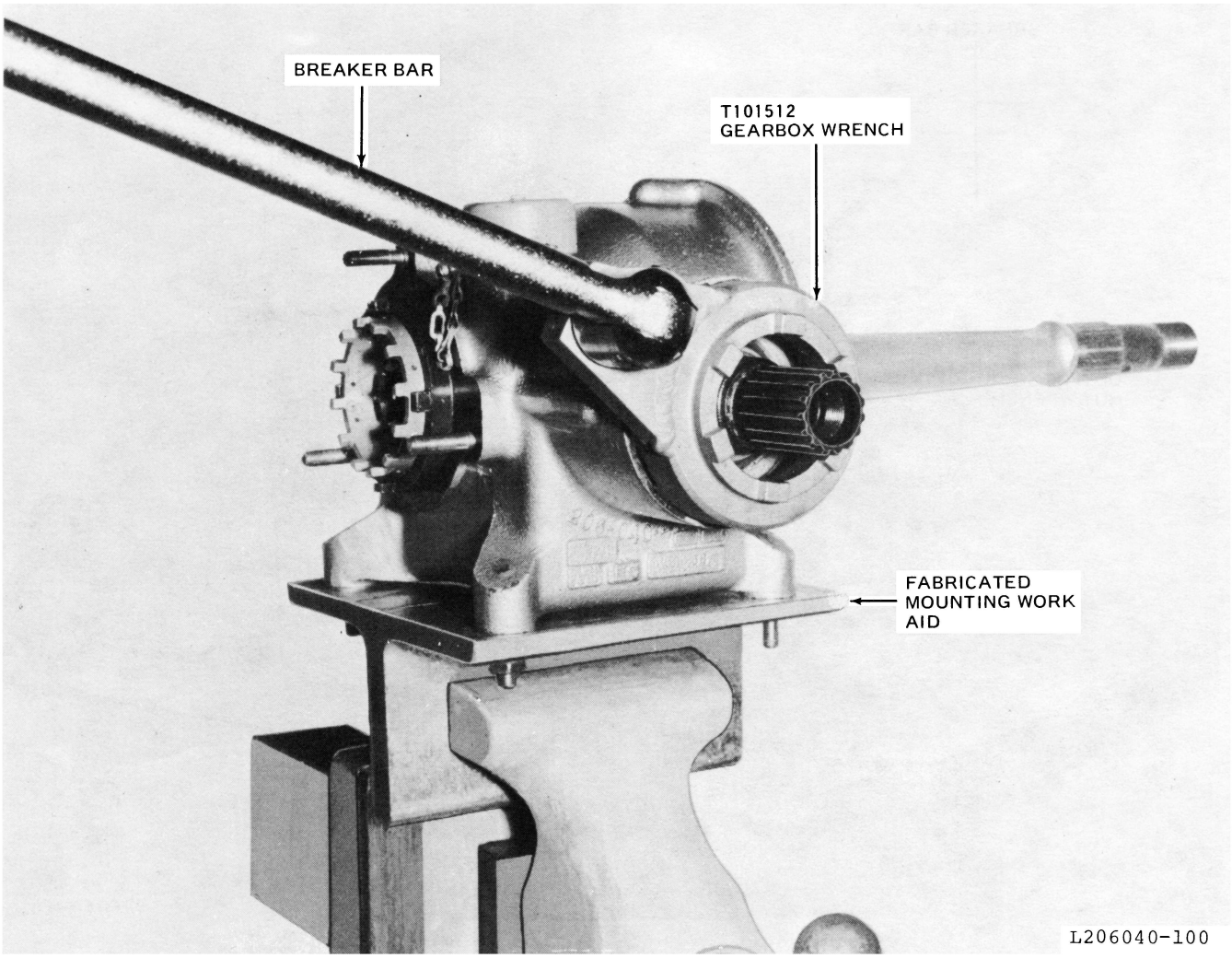

Figure 6-72. Input pinion outer nut — tool application, T101512 and fabricated mounting work aid.

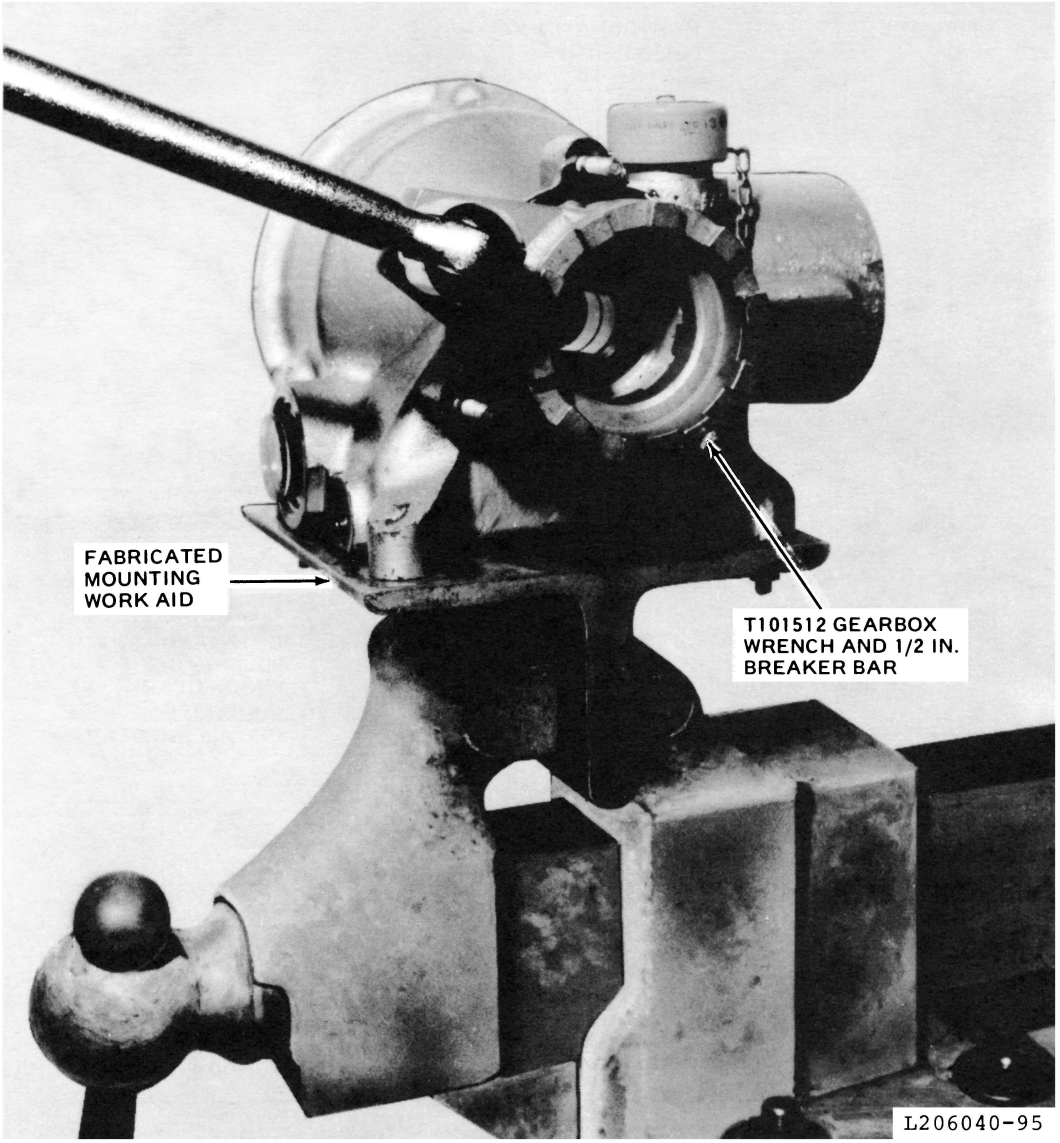

Figure 6-72A. Output shaft outer nut — tool application, T101512 and mounting work aid.

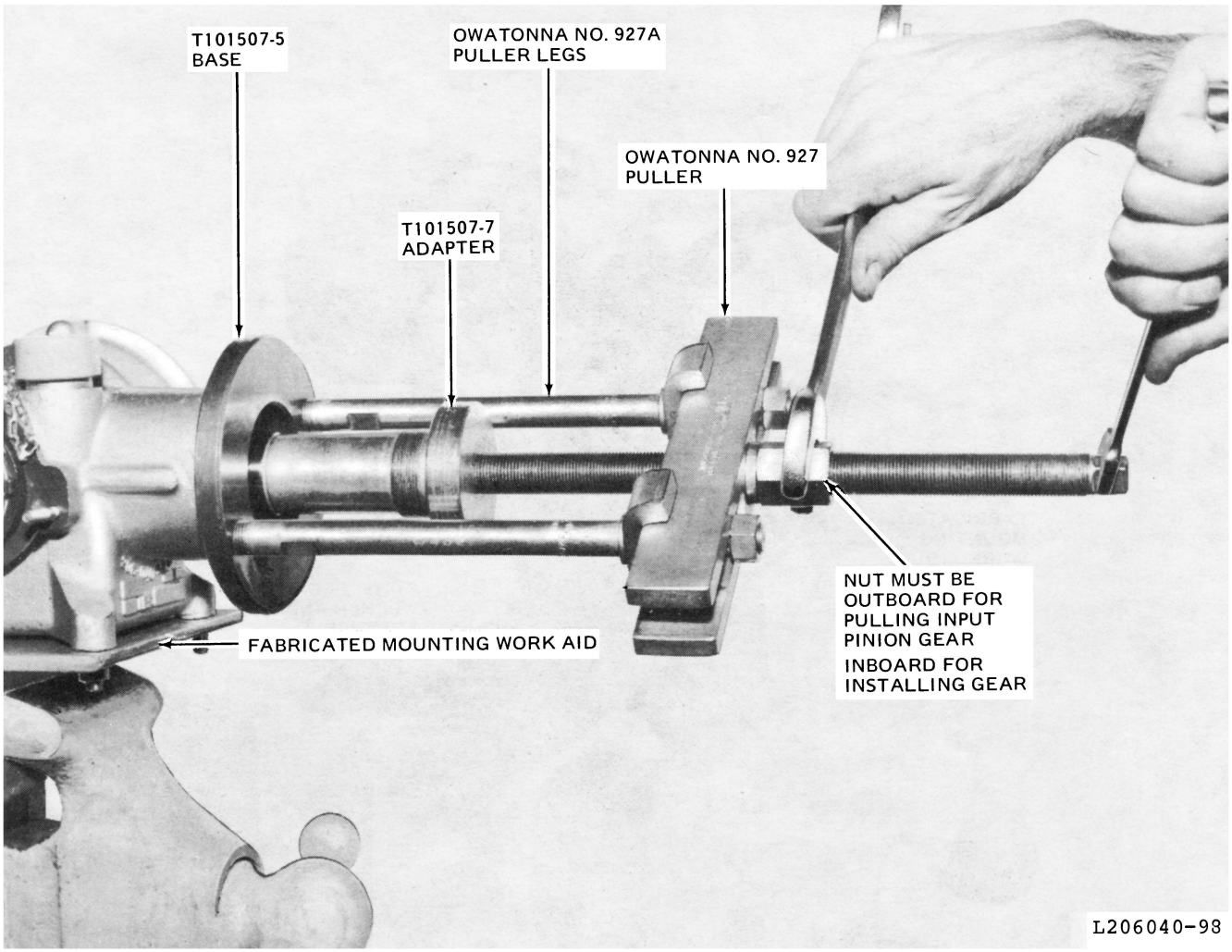

Figure 6-73. Input pinion — tool application, T101507 and Owatonna Nos. 927 and 927A.

(5) Operate puller to remove input pinion (21, figure 6-69) with bearing (20) from gear case.

(6) Unclamp gear case from bench.

k. Remove duplex bearing (20) from pinion shaft (21) as follows:

(1) Install Owatonna 951 bearing puller, or equivalent, around input shaft, between pinion and duplex bearing. Adjust puller to contact bearing inner race only. Pressure while removing bearing, must not be on bearing outer race. Do not tighten puller to contact input shaft, as contact of puller on shaft can score and damage shaft.

(2) Position Owatonna 630-3 step plate or equivalent on end of shaft. (See figure 6-74)

(3) Hydraulic press, if available, may be used to remove bearing (20, figure 6-69) from shaft (21). If hydraulic press is not available bearing may be removed from shaft by using Owatonna 927 puller with attached bearing Owatonna 951 puller and Owatonna 630-3 step plate.

Note

Do not remove retainer ring (22) and roller bearing (23) at this time. They can be more easily removed after output shaft (34) and spiral bevel gear (27) have been removed from gear case.

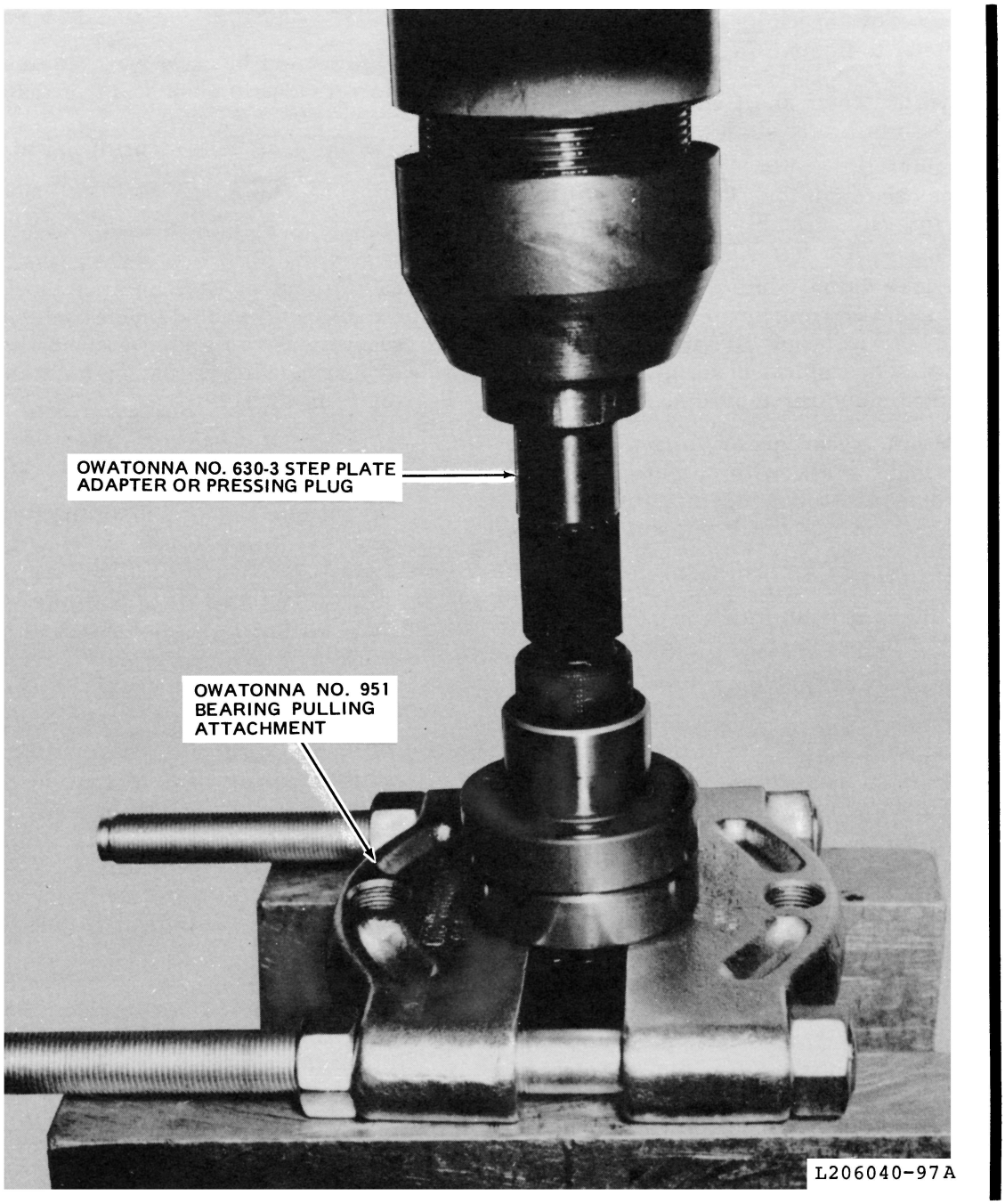

Figure 6-74. Duplex bearing and input pinion — tool application Owatonna Nos. 630-3 and 951

Note

Do not remove specially ground spacer (24). (Refer to figure 6-75 , Note 4.)

l. Remove tail rotor shaft cap assembly (38, figure 6-69 and tail rotor shaft (34) as follows:

(1) Remove three nuts (47) with washers (45 and 46) from case studs (48). Thread two T101308 jackscrews into cap assembly until cap is free on output shaft.

(2) Remove output shaft (34) and attached spiral bevel gear (27) from gear case, and support cap assembly (38) will come off with shaft. Output shaft (34), attached spiral bevel gear (27), and support cap (38) may be removed as follows:

(a) Position gear case on flanges to support case in hydraulic press, with output shaft positioned downward through opening in support. Output shaft must not touch support. (See figure 6-77.)

(b) Obtain a cylindrical pusher to press against end of output shaft (34, figure 6-69) and small enough to pass through duplex bearing (3) inner race.

(c) Exercise care and operate hydraulic press slowly to press shaft (34) from bearing (3). Maintain close watch on cap assembly (38) to make sure cap does not bind or press against support in hydraulic press.

(d) Watch carefully, and when cap assembly (38) has been pressed from gear case, remove gear case from hydraulic press.

(e) With hands, remove cap assembly (38) from case studs and remove from output shaft.

(f) Reposition gear case in hydraulic press and exercise care while pressing output shaft remainder of way from duplex bearing inner race.

m. Disassemble cap assembly (38) as follows:

(1) Remove retainer ring (35).

(2) Remove O-ring (37).

(3) Apply heat lamp to cap (38). Use commercial puller and remove roller bearing (36) from cap (38). Make sure that outward turned tips of puller are long enough to contact bearing outer race. Do not pull against bearings cage.

(4) Position block of wood against seal (39) and tap on block to push seal from cap.

n. Remove ten bolts securing spiral bevel gear (27) to tail rotor shaft (34).

o. Apply heat lamp to gear case in area of duplex bearing (3). When gear case is thoroughly heated tap end of case against block of wood. Duplex bearing should come out. It may be necessary to use an aluminum rod against back side of bearing outer race and plastic mallet to tap bearing from case.

Note

Do not remove specially ground spacer ring (14). (See figure 6-75), Note 2.)

p. Remove retainer ring (22, figure 6-69) from in front of roller bearing (23).

q. Apply heat lamp to gear case (25) in area of input roller bearing (23).

r. When bearing seat of case is thoroughly heated, roller bearing (23) can be easily pushed out.

s. Remove retainer ring (22).

t. Remove oil level indicator. (See figure 6-69 , view A.)

(1) Remove retainer ring (18).

(2) Remove sight glass (16) with O-ring (17).

(3) Remove oil level indicator (15).

u. Remove filler cap (6).

6-206. INSPECTION — TAIL ROTOR GEARBOX.

a. Clean with cleaning solvent (item 12, table 1-1) and dry with compressed air.

b. Strip all paint from gear case by using stripper (item 66, or 66A table 1-1).

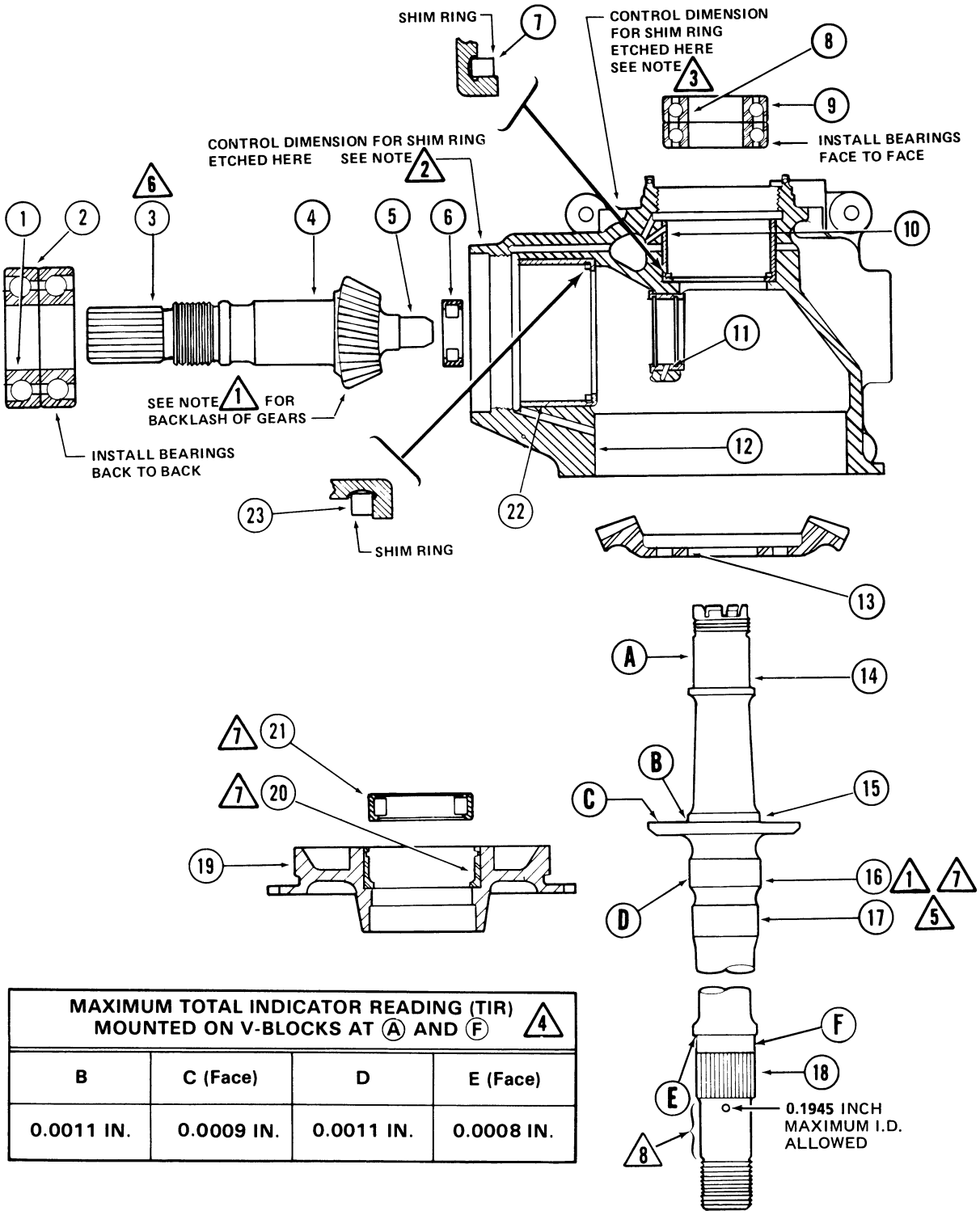

MAXIMUM TOTAL INDICATOR READING (TIR) MOUNTED ON V-BLOCKS AT Ⓐ AND Ⓕ 4			
B	C (Face)	D	E (Face)
0.0011 IN.	0.0009 IN.	0.0011 IN.	0.0008 IN.

Figure 6-75. Tail Rotor Gearbox — Limits Chart (Sheet 1 of 2)

ITEM	NOMENCLATURE		MIN.	MAX.
			INCHES	
1	Duplex Bearing — Input Pinion	ID	1.1809	1.1812
2	Duplex Bearing — Input Pinion	OD	2.4404	2.4409
3	Splines — Input Pinion (Use 0.1200 Diameter Pin)	OD	1.1025	6
4	Duplex Bearing Seat — Input Pinion	OD	1.1814	1.1819
5	Roller Bearing Inner Race — Input Pinion	OD	0.5507	0.5510
6	Roller Bearing — Input Pinion	OD	1.1807	1.1811
7	Shim Ring — Gearbox Case Output			2
8	Duplex Bearing — Output Shaft	ID	0.9841	0.9844
9	Duplex Bearing — Output Shaft	OD	1.8500	1.8504
10	Liner Duplex Bearing Seat — Gearbox Case Output	ID	1.8497	1.8505
11	Liner Roller Bearing Seat — Gearbox Case Input	ID	1.1805	1.1813
12	Bearing Cap Seat — Gearbox Case	ID	4.5005	4.5013
13	Output Shaft Seat — Spiral Bevel Gear	ID	1.2500	1.2506
14	Duplex Bearing Seat — Output Shaft	OD	0.9846	0.9851
15	Spiral Bevel Gear Seat — Output Shaft	OD	1.2500	1.2506
16	Roller Bearing Inner Race — Output Shaft	OD	1.2006	1.2010 1
		OD	2.0010	2.0015 7
17	Seal Journal — Output Shaft	OD		5
18	Splines — Output Shaft (Use 0.060 Diameter Pins)	OD	1.0883	1.0898
19	Mounting Seat — Output Shaft Bearing Cap	OD	4.4997	4.5010
20	Liner Roller Bearing Seat —	ID	1.8498	1.8504
	Output Shaft Bearing Cap	ID	2.6766	2.6774 7
21	Roller Bearing — Output Shaft	OD	1.8500	1.8504
		OD	2.6767	2.6772 7
22	Liner Duplex Bearing Seat — Gearbox Case Input	ID	2.4402	2.4410 3
23	Shim Ring — Gearbox Case Input			

1 Maximum allowable wear on the diameter is 0.0002 inch determined by measuring the difference in the diameter in the worn and unworn area.

2 Output shim ring (item 8) is ground specifically for each tail rotor gear case to properly space duplex bearings and output shaft in gear case to obtain correct gear mesh of output spiral bevel gear and input pinion. Keep this shim with its own case. The control dimension for each case is etched on side of case adjacent to short end of output shaft. Shim ring dimension is gained by using the factor of 1.0140 to 1.0145 inches minus the etched control dimension. This new dimension is the thickness required for the shim ring and must be included on your order to Bell Helicopter Textron.

3 Input shim ring (23) is ground specifically for each tail rotor gear case to properly space duplex bearings and input pinion in gear case to obtain correct gear mesh of input pinion and output spiral bevel gear. Keep this shim with its own case. The control dimension for each case is etched on input side of case. Shim ring dimension is gained by using the factor of 2.3400 to 2.3405 inches minus the etched control dimension. This new dimension is the thickness required for the shim ring and must be included on your order to Bell Helicopter Textron.

4 When the tail rotor gearbox output shaft is suspected of being bent, or having wear, inspect shaft per run–out limits. See Limits Chart on sheet one of this figure.

5 Output shafts having a seal groove depth greater than 0.002 inch must be replaced or shaft seal repositioned by addition of spacer behind seal in bore of output shaft cap.

6 Dress out wear between worn step between worn and unworn areas of spline teeth with india stone or equivalent to form a smoth transition. Corrosion rework limit on I.D. of pinion is 0.010 inch allowable per side. Rework I.D. evenly to prevent balancing problems. After rework fill and drain using primer (super koropon, polyamide epoxy, or zinc chromate) to prevent corrosion.

7 Minimum and maximum tolerances if S.I. 206-112 is complied with.

8 Cleanup corrosion to maximum depth of 0.003 inch for 1/4 circumference (total area). No restriction on location of rework within total area.

206040-469-2

Figure 6-75. Tail Rotor Gearbox — Limits Chart (Sheet 2 of 2)

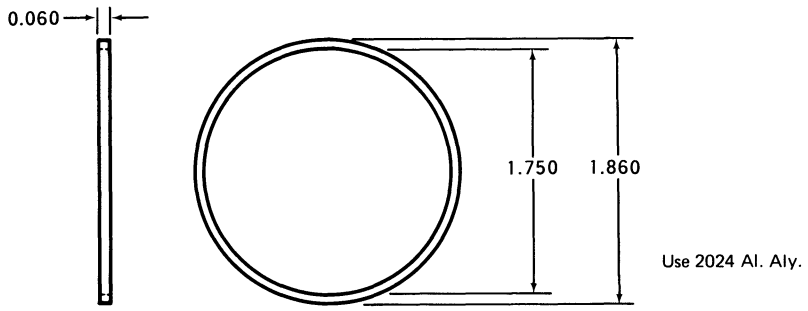

Notes: 1. **Both sides of spacer must be parallel within 0.002.**

2. **Spacer O.D. shall be round within 0.005**

3. **Inside diameter shall be concentric with outside diameter within 0.010.**

206040-220

Figure 6-75A. Spacer for Repositioning Tail Rotor Gear Box Output Shaft Seal

Table 6-7. Tail Rotor Gearbox Painting Requirements

ITEM NAME	PAINT TYPE AND SPECIFICATION	METHOD OF APPLICATION	NO. OF COATS	NOTES
Tail Rotor Gearbox	Polyamide Epoxy Primer (two part kit)	Spray	1	0.6 Mils minimum thickness
	Acrylic Lacquer, P-95 Color No. 17178 (Aluminum)	Spray	2	
Filler Cap and Drain Plug	Acrylic Lacquer, P-95 Color No. 33538 (Orange-Yellow)	Spray or brush	2	

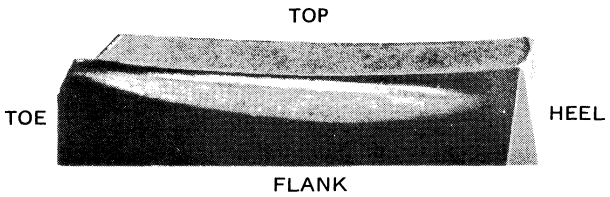

SPIRAL BEVEL GEAR
VIEW **A**

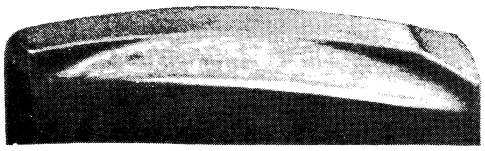

INPUT PINION
VIEW **B**

DESIRED GEAR WEAR PATTERN FOR GEAR AND PINION

SPIRAL BEVEL GEAR
VIEW **C**

ACCEPTABLE WEAR PATTERN FOR GEAR

CHECK GEAR WEAR PATTERN ON CONVEX SIDE OF GEAR AND CONCAVE SIDE OF PINION. WEAR PATTERN MUST BE WITHIN THE FOLLOWING LIMITS:

DESIRED PATTERN: The desired pattern is shown in views A and B. Note that the pattern touches at the toe and has a total length in excess of 0.60 inch. The pattern does not touch the top of tooth of gear or pinion. A slight bright line at top of pattern on gear and in flank of the pinion is characteristic.

MINIMUM LENGTH: The minimum length of the pattern shall be 0.60 inch and may touch heel. See view C.

MAXIMUM LENGTH: The maximum length of the contact wear pattern is such that it must not extend beyond the heel of the tooth but may extend beyond the toe providing that no hard bright line or tooth distress is evident at this point.

PROFILE PATTERN: The pattern shall be positioned on the tooth in a profile direction such that when observing the gear, the pattern may touch top of gear but must not extend over the top. See view C. The pattern may extend over top of pinion providing no sign of distress is evident in flank of gear.

In addition to pattern size and location, examine the drive face of all gear teeth for the following unacceptable defects: noncleanup, grinding scratches, pitting, corrosion, cuts, nicks, dents, grinding flats or barber poling (evidenced by diagonal streaks in the wear pattern), scuffing, scaring, and inclusions. Pitting of any magnitude resulting from surface fatigue is not permissible.

L206040-92

Figure 6-75B. Gear Wear Pattern

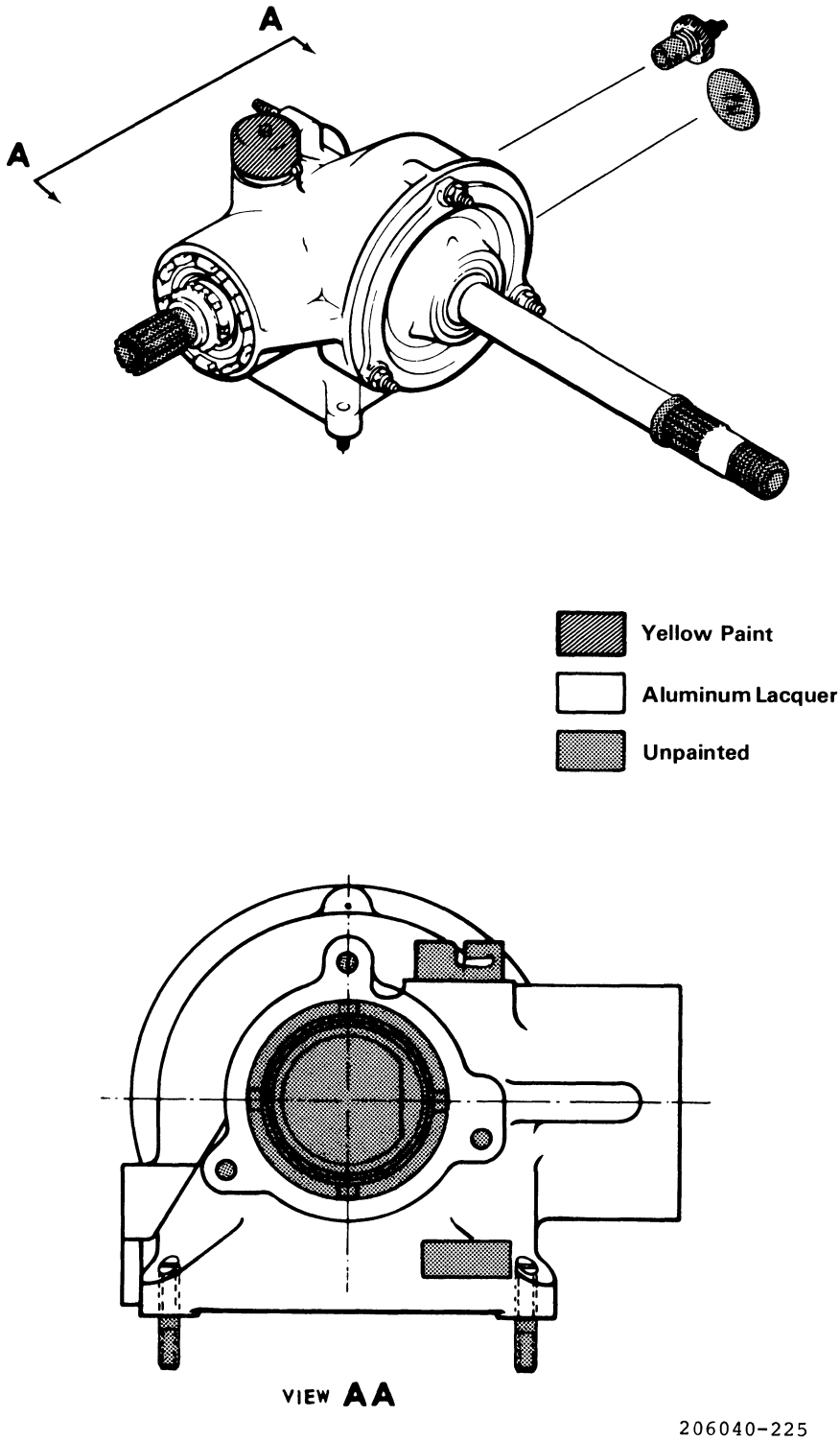

Figure 6-76. Tail Rotor Gearbox — Painting

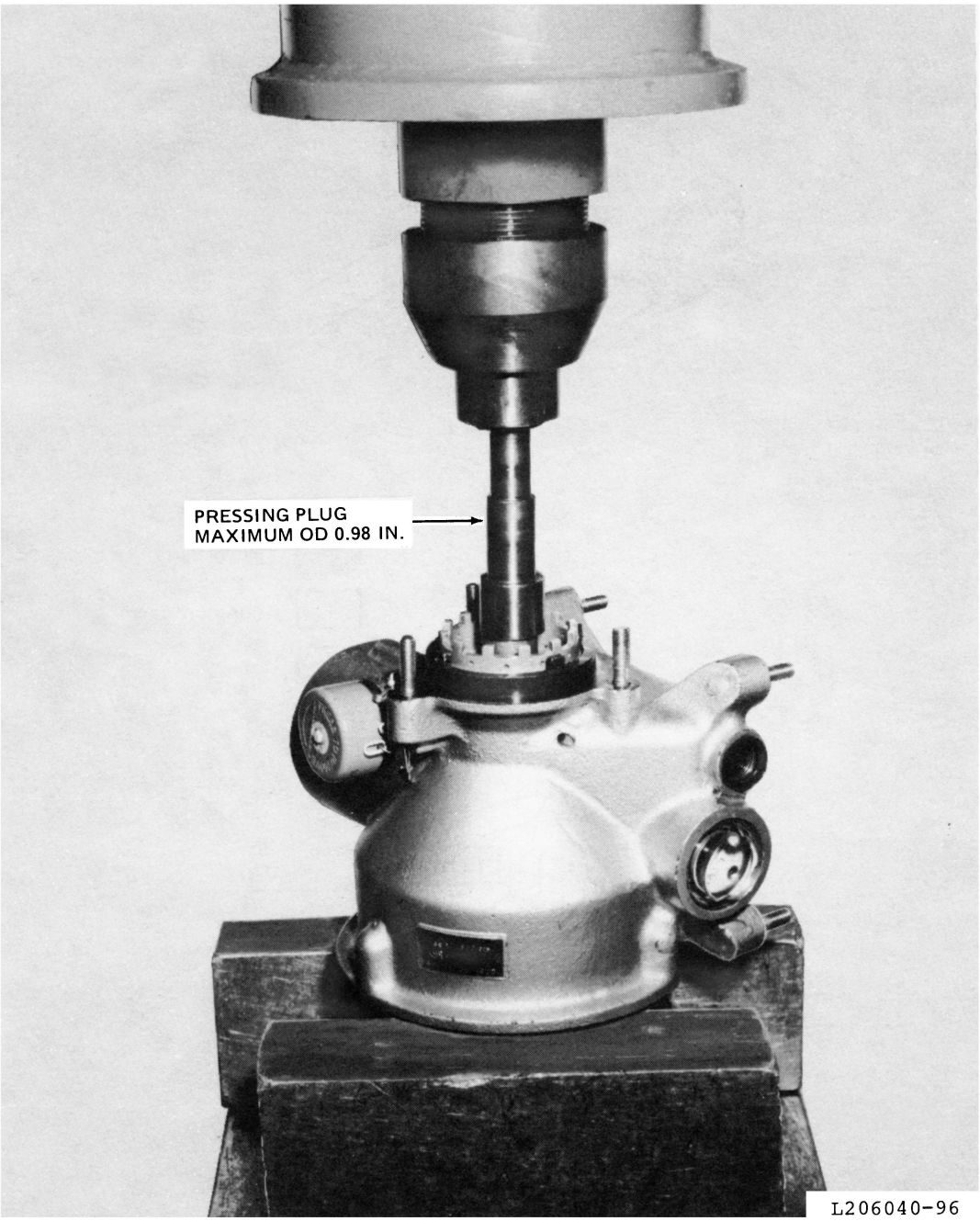

Figure 6-77. Removal of Output Shaft — Tool Application

c. Inspect bearings for freedom of movement and for flat spots.

d. Inspect splines and gear teeth for burrs, nicks, scratches, cracks and wear. (See figure 6-75B)

e. Inspect shafts and all parts for wear and damage.

f. Refer to Section I, SPECIAL INSPECTION — ACCEPTANCE STANDARDS, for Magnetic Particle or Fluorescent Penetrant Inspection Criteria.

g. Dimensionally check all worn parts, using dimensions shown on figure 6-75 .

6-206A. TAIL ROTOR GEARBOX — CORROSION DAMAGE INSPECTION LIMITS.

a. Replace case and cap assembly if bearing liners are loose or if threads for studs are structurally damaged and impractical to repair.

b. Replace case and cap assembly that have corrosion damage under bearing liners, in critical areas which would affect the function or structural integrity of the part, or if damage exceeds the limits for areas designated on figure 6-77A.

c. Areas of tail rotor gearbox most frequently damaged by corrosion are shown in figure 6-77A. Acceptable depth limits for pitting and percentage of area pitting (i.e., the percentage of area in which the original machined surface has been removed by corrosion) are as follows:

(1) Case Assembly. Areas A, B and D, figure 6-77A, should be inspected carefully prior to any corrosion removal for evidence of corrosion in threads between case and studs. Any corrosion on threads is cause for rejection of part. In areas A through D, the maximum depth of corrosion pitting is 0.030 inch and no more than 40 percent of the area of any 1.0 inch square nor 20 percent of the total area of any surface or diameter should be pitted.

(2) Cap Assembly. In areas E, F, and G, the maximum depth of pitting is 0.030 inch and no more than 40 percent of the area in any 1.0 inch square nor 20 percent of the total area of any surface or diameter should be pitted.

d. Remove corrosion damage and accomplish repairs in accordance with paragraph 6-206B .

6-206B. TAIL ROTOR GEARBOX — CORROSION REMOVAL AND REPAIR.

Note

Removal of corrosion products is mandatory prior to subsequent repair or corrosion protective treatment.

a. The use of the magnesium touchup treatment is restricted to parts and assemblies that have small areas of the dichromate coating removed by scratches, abrasions or minor rework. Parts or assemblies that require touchup shall be treated as follows:

(1) Remove oil and grease with a MEK (item 17).

(2) Masking is not required, however, it should be used, as required, to prevent touchup solution from running into areas where it is not needed.

(3) Scrub the area to be treated with fine aluminum wool (item 91). Abrade to clean bare metal. Fresh machined surfaces may be treated without abrading.

(4) Flush areas with cleaning compound (item 106) mixed 10 to 15 per cent, by volume, in water, as required, to ensure a water-break free surface.

(5) Rinse with clean water and repeat steps (3) and (4) as required, to provide a clean surface.

b. Prepare magnesium touchup treatment solution by mixing 1.3 ounce (10 grams) chromic acid (item 131), and 1 ounce (7.5 grams) calcium sulfate (item 107) per gallon (3.785 liters) of water.

Note

The calcium sulfate will not go into solution.

(1) Apply touchup solution with a brush or swab to repaired areas. Allow solution to react for at least 1 minute, reapply solution, as required, to keep

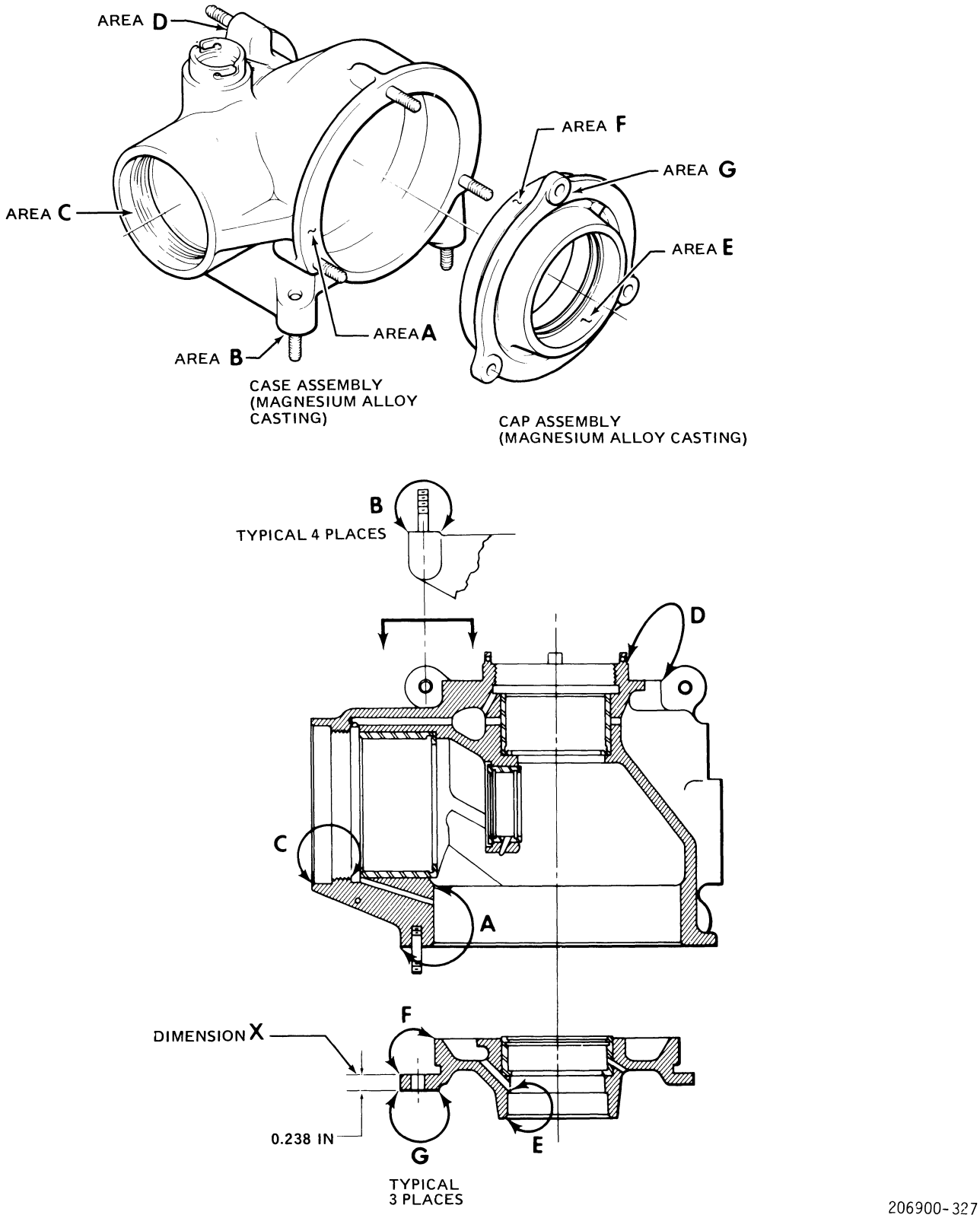

Figure 6-77A. Tail Rotor Gearbox — Corrosion Damage Inspection Limits

the area wet. Excess solution should be clearly marked, dated, and stored at room temperature in a glass jar. Do not store touchup solution where temperatures may vary to extremes, or in contact with direct sunlight. Do not use a touchup solution older than 3 months from date of mixing.

(2) Rinse thoroughly with clean water to remove excess solution. The treatment should produce a brassy colored film. If required, repeat application of touchup solution until a brassy colored film is obtained. Rinse, demask and re-rinse to ensure solution removal. All rinsing shall be accomplished using room temperature water.

(3) Dry with filtered compressed air and dry cloths.

(4) Parts that require painting as the next operation shall be painted as soon as practical after drying, preferably within 24 hours. (Refer to paragraph 6-209 .) Bare steel parts shall be oiled immediately after drying to prevent corrosion.

c. Rework or repair case and cap assembly as follows:

(1) Corrosion in areas A through F, figure 6-77A, or on the walls of bolt holes should be removed by immersion in hot chromic acid bath rather than by mechanical means so that effective position of the original surfaces is not changed. It is mandatory that all corrosion products be removed. (Refer to step d.)

(2) In area G, if no pitting is present in the area contacted by the washers, corrosion may be removed by immersion in a hot chromic acid bath. (Refer to step d.) If area is pitted, then the surface may be machined. Minimum dimension after repair at point X is 0.238 inch.

(3) Magnesium parts which will be reused must have all sharp edges polished out with No. 400 to 600 grit abrasive cloth (item 13).

d. Prepare hot chromic acid bath by mixing 20 to 24 ounces of chromic acid (item 131) per gallon or liter of water. Bath temperature should be maintained at a temperature of 200°F (93°C). Parts should be treated in the bath for as long as is required to completely remove corrosion products. The corrosion removal process must be controlled to ensure that machined dimensions are maintained and that cadmium plating is not removed from plated parts. Plated parts should be masked with tape (item 132).

e. Remove broken, bent, damaged, or loose studs (1 and 2, figure 6-77B.) in case assembly (3) as follows:

(1) Inspect threaded stud or dowel pin hole in case assembly for damage. If holes are damaged, repair or replace case assembly, as required. Stud retaining holes must be tapped to a sufficient depth so no imperfect threads can be engaged.

(2) Clean out small vent hole in bottom of stud or holes, as required. Apply unreduced zinc chromate primer (item 80) to threads of replacement stud and install to the depth and torque shown in figure 6-77B.

6-207. REASSEMBLY — TAIL ROTOR GEARBOX.

a. Install oil level indicator.

(1) Insert oil level indicator (15, figure 6-69 , view A) into gear case.

(2) Position O-ring (17) on sight glass (16). Apply a thin coating of ultrachem assembly fluid (item 133) to O-ring and edge of sight glass. Insert sight glass into gear case.

(3) Install retainer ring (18, figure 6-69 , View A).

b. Ensure that specially ground shim ring (14) is installed in groove in gear case.

c. Locate burr marks or etch marks on duplex bearing (3, figure 6-69) inner races and make pencil mark across inside inner races in line with burr marks. Apply heat lamp to bearing area of gear case. Lubricate bearing outer races with turbine oil (item 20). Install bearings (9, figure 6-75) one at a time, face to face as shown in figure 6-75).

d. Lubricate threads on outer nut (1, figure 6-69) with turbine oil (item 20), and install nut in gear case (25, figure 6-69) finger tight. Nut will be torqued in a later step.

e. Install retainer ring (22) in inner groove in gear case.

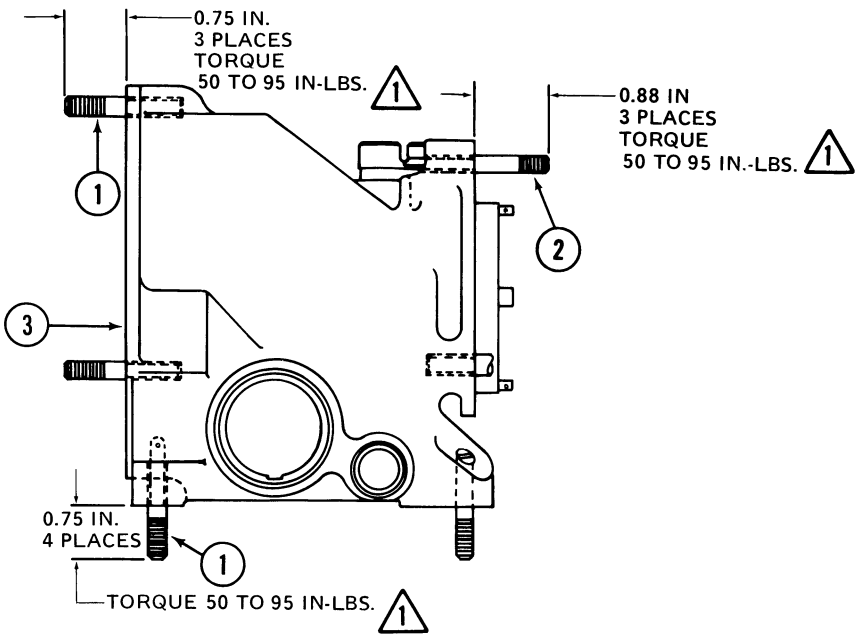

1. Stud AN125999 thru AN126002 oversize AN126003 thru AN126004
2. Stud AN126011 thru AN126014 oversize AN126015 thru AN126016
3. Case Assembly

NOTES:

1 Set studs with unreduced primer (item 80, table 1-1)

206900-328

Figure 6-77B. Tail Rotor Gearbox — Stud Replacemet

f. Apply heat lamp to roller bearing (23) seat in gear case. When gear case is thoroughly heated install roller bearing (23) and outer retainer ring (22).

CAUTION

Cut lockwire tails short and tuck into bolt (96) head to prevent contact with inboard bearing housing of input pinion (21).

g. Assemble spiral bevel gear (27) and output shaft (34) and secure with 10 bolts (26). Torque bolts 100 to 125 inch-pounds and secure with 0.032 inch lockwire (item 19).

h. Apply a light coating of turbine oil (item 20) on duplex bearing seat of output shaft (34, figure 6-69). Obtain a cylinder to press against duplex bearing (3) inner race. The inside diameter of support cylinder must be larger than outside diameter of shaft (34). Position outboard end of output shaft (34) on support plate in hydraulic press. Position gear case over upper end of shaft and bevel gear, with end of shaft starting through duplex bearing (3) inner race. Position bearing pressing cylinder against bearing (3) inner race and operate hydraulic press to press bearing inner race onto end of shaft.

Note

If seal contact point on output shaft (34) has a worn groove deeper than 0.002 inch, manufacture a spacer as shown in figure 6-75A. Install spacer in cap (38, figure 6-69) behind seal (39).

i. Apply heat lamp to output shaft cap (38) and install roller bearing (36) and retainer ring (35). Install seal (39) in cap.

j. Install new O-ring (37) in groove of outer edge of cap (38). Apply a thin coating of ultrachem assembly fluid (item 133) on O-ring and outer edge of cap. Exercise caution to help seal past shoulder on output shaft (34, figure 6-69) or seal will be damaged. Position cap assembly over output shaft and install on case studs (48). Install aluminum washers (45) next to cap, steel washers (46) and nuts (47) and torque nuts 50 to 70 inch-pounds.

k. Lubricate threads with turbine oil (item 20) and install shaft nut (2, figure 6-69) on end of shaft (34).

(1) Position T101511 splined holding wrench on splined end of tail rotor shaft (34) and clamp wrench in vise.

(2) Use T101513 wrench and torque nut (2) 310 to 350 inch-pounds.

(3) Lock with cotter pin (7) with head of pin in shaft slot and shank through hole in nut. Bend one tang toward end of nut and trim so that it does not extend beyond end of nut (tang flush to 0.025 inch recessed from end of nut). Bend other tang in opposite direction. (Detail A.)

l. Ensure that specially ground shim ring (24) is installed in input end of gear case.

m. Stack bearings (1, figure 6-75) back to back as shown.

n. Install duplex bearing (20 figure 6-69) on input shaft as follows:

(1) Apply a thin coating of trubine oil (item 20, table 1-1) to bearing seat on input pinion shaft (21, figure 6-69). Obtain a cylindrical bearing pusher (See figure 6-80) to press against bearing inner race, with inside diameter larger than input pinion shaft (21). Using a hydraulic press, install bearings, keeping pencil marks on inner races lined up.

(2) If hydraulic press is not available, duplex bearing may be installed on input pinion shaft (21) by using pusher tool, attached Owatonna 951 bearing puller and Owatonna 630-3 step plate. (Refer to figure 6-74 .)

o. Install O-ring (19) on input pinion shaft. Press spacer (33) over O-ring 19 and on input pinion shaft.

p. Install input pinion (21) and duplex bearings (20) in case assembly (25) using T101507 pinion installation and removal set as follows: (See figure 6-73 , for tool applications.)

(1) Mount and secure case assembly (25, figure 6-69) in fabricated mounting work aid (figure 6-78) and clamp up in shop vise.

(2) Thread T101507-5 base into case assembly (25).

(3) Thread T101507-7 adapter onto input pinion (21) until in firm contact with spacer (33).

(4) Assemble and install Owatonna 927 puller and 927A puller legs to T101507-5 base and T101507-7 adapter as shown in figure 6-73 , except that puller nut must be on the inboard side of puller bar.

CAUTION

When using a heat lamp do not exceed a temperature of 200°F (93°C) for damage to packings may occur.

(5) Apply heat lamp to case assembly (25, figure 6-69) and heat in area of duplex bearings (20).

(6) Operate puller and install input pinion (21) and duplex bearings (20) in case assembly (25). Exercise caution to ensure that nose of input pinion aligns with inner race of roller bearing (23) and that gear teeth correctly mesh. Duplex bearings must seat firmly in case assembly bearing liner. Disassemble and remove puller and pinion installation tools.

(7) Rotate input pinion (46) by hand to ensure that duplex bearings (20) roll smoothly and that input pinion is correctly meshed with spiral bevel gear (27).

q. Install seal (30) in outer nut (31) and install O-ring (32) on nut. Lubricate O-ring and threads with turbine oil (item 20, **table 1-1**) and screw outer nut into case firmly against bearing. Nut will be torqued later.

CAUTION

Nut (29) tangs (shoulders) shall be installed next to spacer (33) to enable lockwasher (28) to bottom and lock properly on nut (29).

r. Lubricate threads on input pinion shaft (21, figure 6-69) with turbine oil (item 20, **table 1-1**) and install nut (29, figure 6-69) on shaft. Clamp T101511 splined wrench in vise and position splined end of input shaft in wrench. Use spanner wrench with torque wrench and torque inner nut (29) 360 to 400 inch-pounds.

s. Position a new serrated lockwasher (28) on shaft. Use a plastic mallet to force locking tangs of washer over nut (29) with the two locking tangs locked behind nut (29).

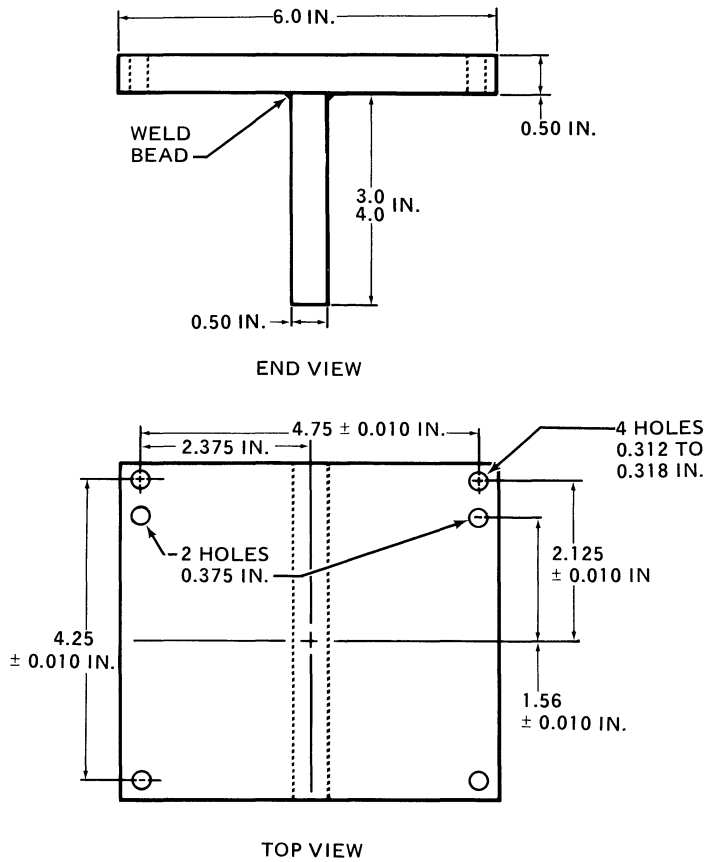

MATERIAL; 0.50 Aluminum, Brass or Steel stock

NOTE: Heat treatment or paint finish not required.

USE: Mounting tail rotor gearbox to shop vise for assembly, disassembly, repairs, and backlash check.

L206040-99

Figure 6-78. Fabrication of tail rotor gearbox mounting — work aid.

t. Clamp gear case to work bench or other suitable work surface. Use T101512 wrench and torque wrench to torque input bearing outer nut (31) to 100 to 150 foot-pounds. Safety nut (31) to tang on bottom of gear case with 0.032 inch lockwire (item 19, **table 1-1**). Do not unclamp case from work bench.

u. With gear case clamped to work bench use T101512 wrench and troque wrench to torque output bearing outer nut (1) 650 to 800 inch-pounds. Secure nut (1) to tang on gear case with 0.032 inch lockwire (item 19, **table 1-1**). Do not unclamp case from work bench until after backlash check.

v. Install drain plug (4, figure 6-69 , view A) with new packing (40) or chip detector (41) and self-closing valve (43) with the packings (42 and 44) to tail rotor gear box case assembly (25). (Refer to figure 6-69 view A and detail B, for location and configurations.) Torque drain plug (4) or self-closing valve (43) 75 to 125 inch-pounds. Secure drain plug or self-closing valve to drilled hole in gear case with 0.032 inch-lockwire (item 19, **table 1-1**).

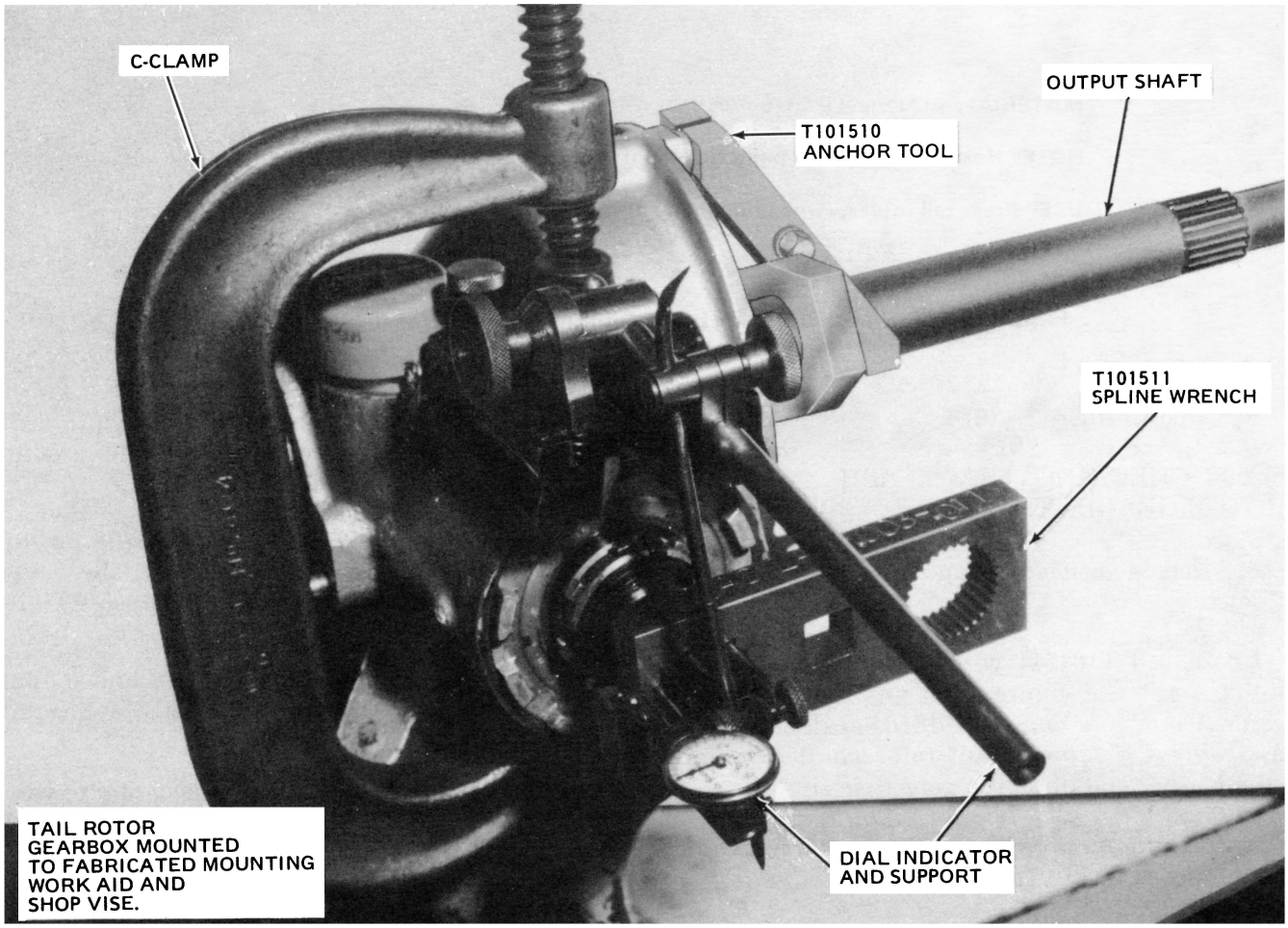

L206040-88C

Figure 6-79. Checking tail rotor gearbox backlash — tool application, T101510 and T101511

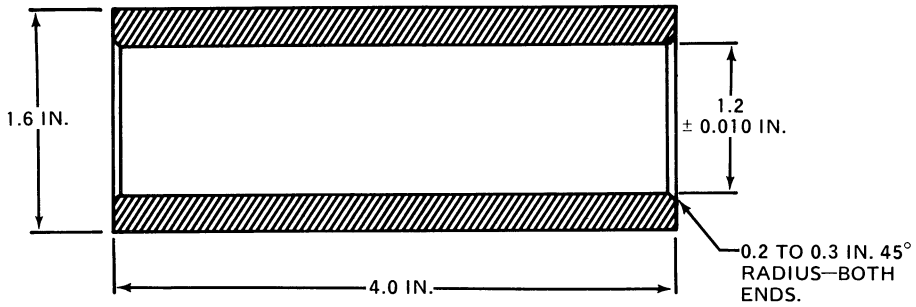

MATERIAL; 4130 Steel (MIL-S-6758)

NOTE: Heat treatment and paint finish not required.

USE: Press tail rotor gearbox duplex bearings onto input pinion gear.

L206040-104

Figure 6-80. Fabrication of Input Pinion Bearing Pressing Work Aid

w. Install filler cap (6).

6-208. CHECKING BACKLASH — TAIL ROTOR GEARBOX.

a. Keep gear case clamped to work bench for this check.

b. Install T101511 wrench on splined end of input shaft (21, figure 6-69) and tighten Allen screw. Clamp one end of T101510 backlash anchor assembly tool around tail rotor shaft (34) and clamp other end of tool to gear case stud.

c. Position point of dial indicator on indicator spot marked on T101511 wrench.

d. Rotate T101511 wrench and take indicator reading. Rotate T101511 wrench in opposite direction and take indicator reading. Amount of movement (backlash) must be within 0.003 to 0.011 inch.

6-209. PAINTING — TAIL ROTOR GEARBOX.

a. Touch up all exposed magnesium surfaces with touch-up solution. (Refer to paragraph 6-96 / 6-95)

b. Clean all external surfaces of case and bearing cap.

c. Apply sealant (item 86, **table 1-1**) into vent holes for mounting studs in case and around outside of nut (31, figure 6-69).

d. Remove oil filler cap and drain plug or chip detectors. Mask filler cap adapter, sight glass and drain plug or chip detector boss with masking tape (item 75, **table 1-1**).

e. Mask input shaft and oil seal and output shaft and oil seal. (See figure 6-76 for paint requirements.)

f. Prime and paint gearbox in accordance with table 6-7.

g. For long term storage, refer to Section 1 of manual for requirements.

6-210. INSTALLATION — TAIL ROTOR GEARBOX.

a. For installation of 206-040-400-3 tail rotor gearbox, refer to paragraph 6-90 .

b. For installation of 206-040-400-5 and subsequent, refer to paragraph 6-91 ..

c. Service tail rotor gearbox with turbine oil (item 20, **table 1-1**). (Refer to paragraphs 1-25 through 1-29 and table 1-2.)