Section VII
Part I
Power Plant (250-C18)

TABLE OF CONTENTS

Part 2
Power Plant (250-C20)

LIST OF TABLES

LIST OF FIGURES

Section VII
PART 1
Power Plant (250-C18)

7-1. POWER PLANT. (Figure 7-1.)

7-2. DESCRIPTION. The model 250-C18 turboshaft engine manufactured by the Allison Division of General Motors is an internal combustion gas turbine engine consisting of an axial-centrifugal-flow compressor, a single combustion chamber, a two-stage gas producer turbine and a two-stage power turbine. The accessory gearbox incorporates the main power and accessory drive gear trains and the gearcase serves as the structural support of the engine. The engine is horizontally mounted aft and above the fuselage and is supported by bi-pod mounts to the service deck. Fuel for engine operation is supplied by a single bladder type fuel cell and lubricating oil is supplied by an external reservoir. Refer to Operation and Maintenance Manual, Allison Publication No. 5W2 for detailed description of basic engine, components and specifications. The model 250-C18 turboshaft engine is installed on helicopters 4 through 660, and 672 through 715.

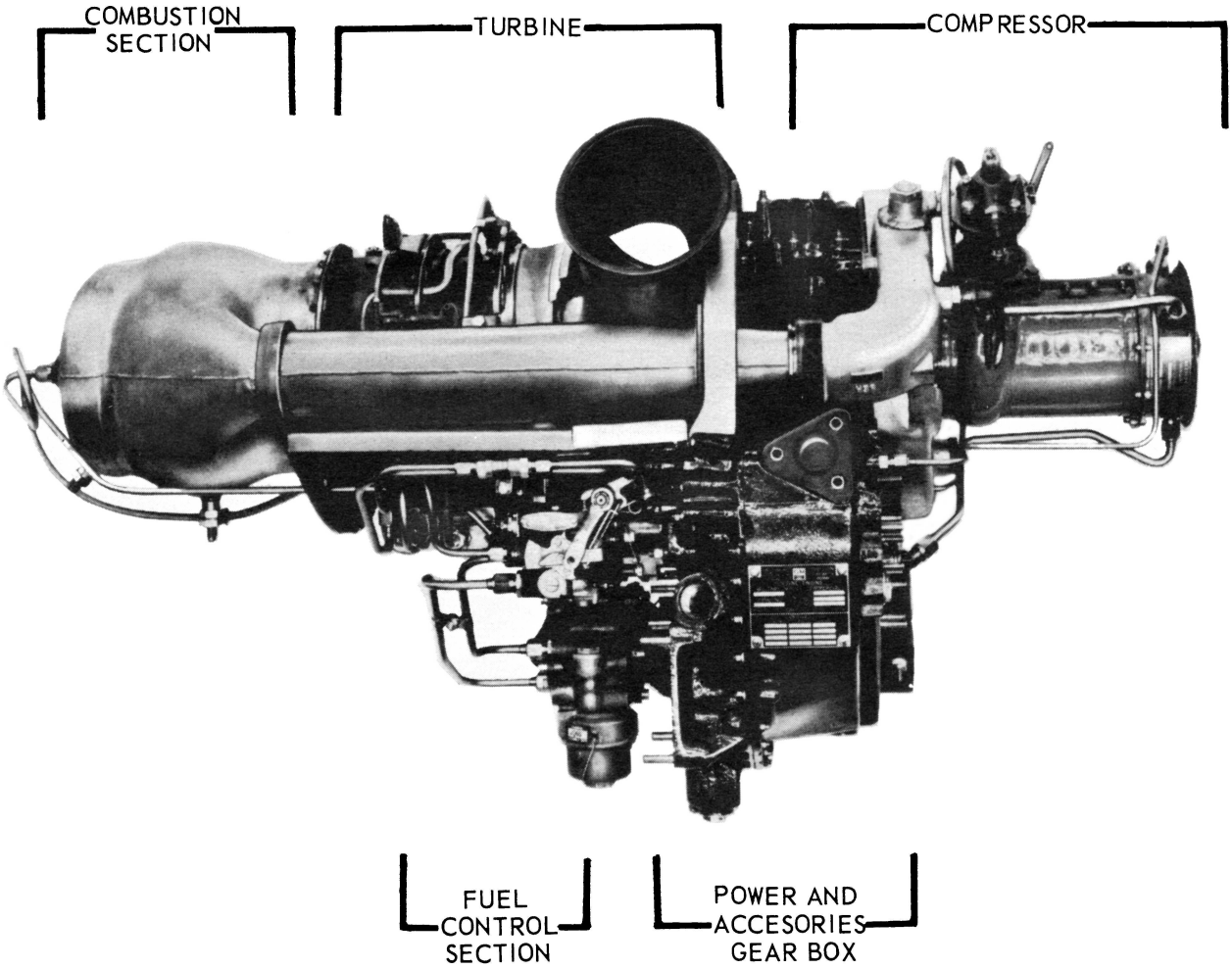

206061-2

ENGINE RIGHT SIDE VIEW

Figure 7-1. Engine Major Components – Model 250-C18

7-3. TROUBLESHOOTING ENGINE.

a. Refer to Operation and Maintenance Manual, Allison Publication No. 5W2.

b. Torsional oscillation.

(1) When the response or following time of the engine speed control system is the same as the natural harmonic frequency of the power train system, a torsional oscillation (or oscillation in power output) can occur. A torsional oscillation can be caused by one or more of the following:

(a) Leakage of fittings of engine fuel control air lines.

(b) Dirty or malfunctioning double check valve.

(c) Malfunction of fuel control or power governor.

(2) After an engine component change involving the fuel control system, it is recommended that the helicopter be checked for torsional oscillation. This check should be performed as follows:

(a) Load helicopter as much as possible up to gross weight. This check must be performed at a minimum of 85 percent torque.

(b) Fly helicopter up to the maximum power limitations for the engine as specified in the Flight Handbook. This can be done best by climbing the helicopter.

(c) While at the high power setting, quickly rotate the twist grip approximately 15 to 20 degrees off toward the flight idle stop and quickly return the grip to the maximum open position. At this time torsional oscillation may be noted. If the system is functioning properly, the torsional oscillations should be completely dampened within six to ten oscillations. These oscillations may be felt in the fuselage as well as observed on the torquemeter and N_2 tachometer. The engine sound will also be changed during oscillations.

(d) If the torsional oscillations are not dampened within six to ten oscillations, or if they should intensify, turn twist grip toward the flight idle stop until oscillations stop. The twist grip may be opened slowly to restore engine power.

(3) If torsional oscillations exceed the limits specified above, corrective action must be taken. Correct the oscillations in the sequence shown. If step (3) (a) does not correct the problem, proceed to step (3) (b), etc.

(a) Check fuel control air lines for loose connections and air leaks.

(b) Clean double check valve. (Refer to Allison publication 5W2.)

(c) Replace double check valve.

(d) Replace fuel control and/or N_2 governor.

7-3A. COMPRESSOR WASH.

The compressor wash system consists of a spray fitting, tube assembly, cap assembly, and fittings and bracket mounted on the screen floor of the induction screen. The spray fitting is directed to the centerline of the engine bellmouth and provides a means of washing the engine compressor without removing all the fairings and cowling. (Refer to Operation and Maintenance Manual, Allison Publication 5W2 for requirement and materials needed for compressor wash.)

a. Disconnect main ECU bleed air line, control line, and cap at BL R 13.12, WL 79.00, STA 119.00, if installed.

b. After engine wash, remove caps and reconnect main ECU bleed air line and control line.

7-4. ENGINE CHANGE.

7-5. REMOVAL – ENGINE ASSEMBLY. (Figure 7-2.) Remove the engine as a quick-change unit, with adapting parts attached to the engine. Disconnect all fuel and oil lines at firewall connections. If a replacement engine is to be installed, reduce the removed engine to a basic configuration and use the removed parts to build up the replacement engine. (Refer to paragraph 7-6) Cap-off openings to preclude entry of foreign material and remove parts in any practical order, using the following steps as a guide. Consult Allison Operation and Maintenance Manual for detail information on the basic engine.

a. Disconnect battery.

b. Raise engine cowl panels and remove clamps (1) from exhaust stacks (2). Remove stacks and install covers on engine exhaust ports. Remove vent hose (detail C) if installed on exhaust stack.

c. Remove engine cowling. (Refer to Section VIII.)

CAUTION

Starter generator must be supported when mounting clamp is loosened. Failure to support starter generator can result in premature failure of shaft.

d. Disconnect the following electrical connections: temperature indicating harness, anti-ice control actuator, governor actuator, power turbine tachometer, gas producer tachometer, and ignition exciter. Remove clamp that secures electrical cables to engine. Remove clamp securing starter generator to engine. Remove starter generator and place on lower firewall.

e. Remove the engine to transmission drive shaft and disconnect the tail rotor drive shaft and remove. (Refer to Section VI.)

f. Drain engine oil reservoir. Disconnect the engine oil inlet (3), outlet (4) and vent hoses (5) at the aft firewall. Disconnect clamps (6,7) securing oil hoses to engine and mount leg.

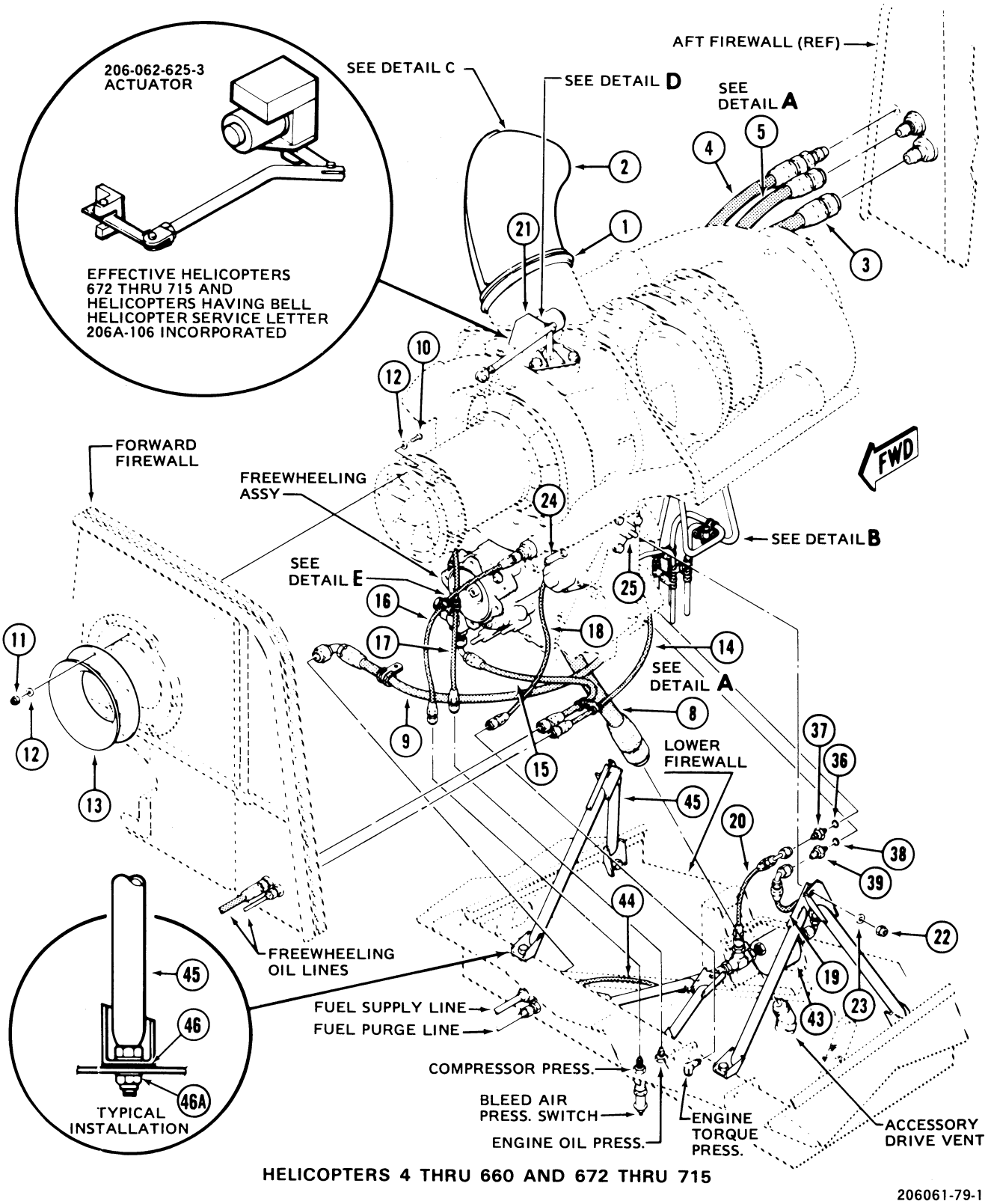

Figure 7-2. Engine Installation — Model 250-C18 (Sheet 1 of 4)

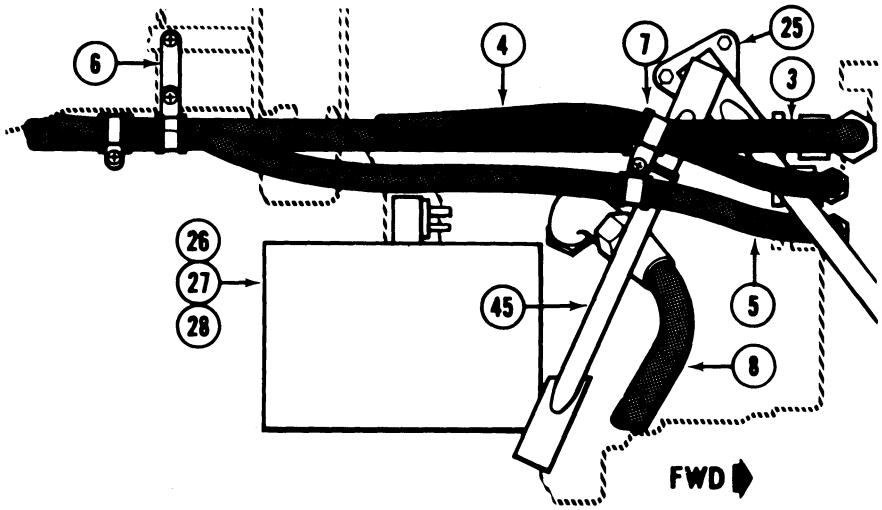

LOOKING INBOARD RH SIDE

DETAIL A

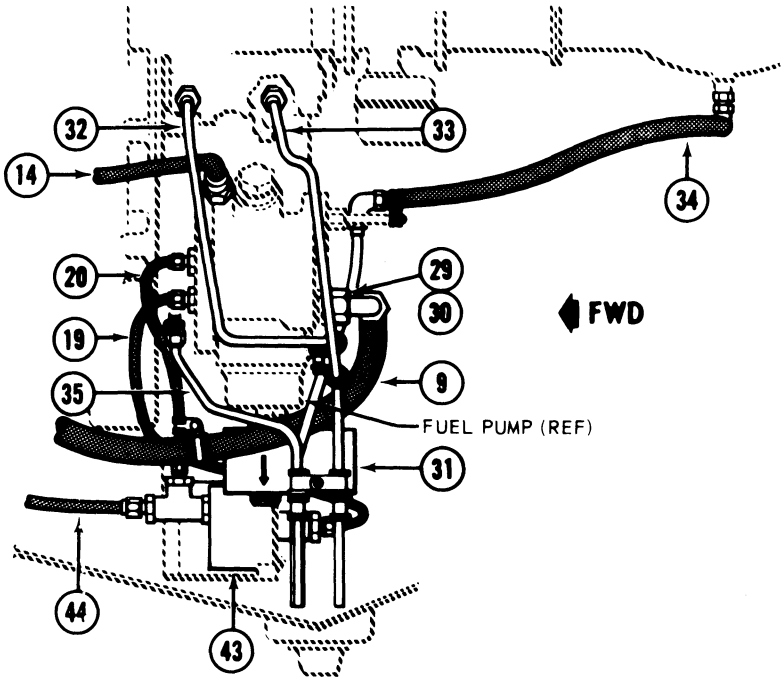

LOOKING INBOARD LH SIDE

DETAIL B

1. Clamp
2. Exhaust Stack
3. Hose, Engine Oil Inlet
4. Hose, Engine Oil Outlet
5. Hose, Oil Tank Vent
6. Clip
7. Clamp
8. Hose, Accessory Drive Vent
9. Hose, Fuel Supply
9. Hose, Fuel Supply
10. Screw
11. Nut
12. Washer
13. Bellmouth
14. Hose, Freewheeling Oil Supply
15. Hose, Freewheeling Oil Return
16. Hose, Compressor Pressure
17. Hose, Engine Oil Pressure
18. Hose, Engine Torque Pressure
19. Hose
20. Hose
21. Anti-Ice Control
22. Nut
23. Washers
24. Tachometer Generator, (Power Turbine - Left) - (Gas Producer - Right)
25. Fitting
26. Starter Generator
27. Adapter
28. Clamp
29. Reducer
30. Packing
31. Filter Drain Valve
32. Exhaust Collector Drain
33. Heat Shield Drain
34. Combustion Chamber Drain
35. Fuel Pump Seal Drain
36. Packing
37. Union
38. Packing
39. Reducer
40. Tube
41. Actuator Lever
42. Spacer
43. Fuel Filter Pressure Switch
44. Hose, Purge
45. Mount
46. Shim
46A. Nut
47. Hose, Engine Oil Pressure
48. Transducer
49. Hose, Engine Torque Pressure
50. Transducer

206061-79-2

Figure 7-2. Engine Installation — Model 250-C18 (Sheet 2 of 4)

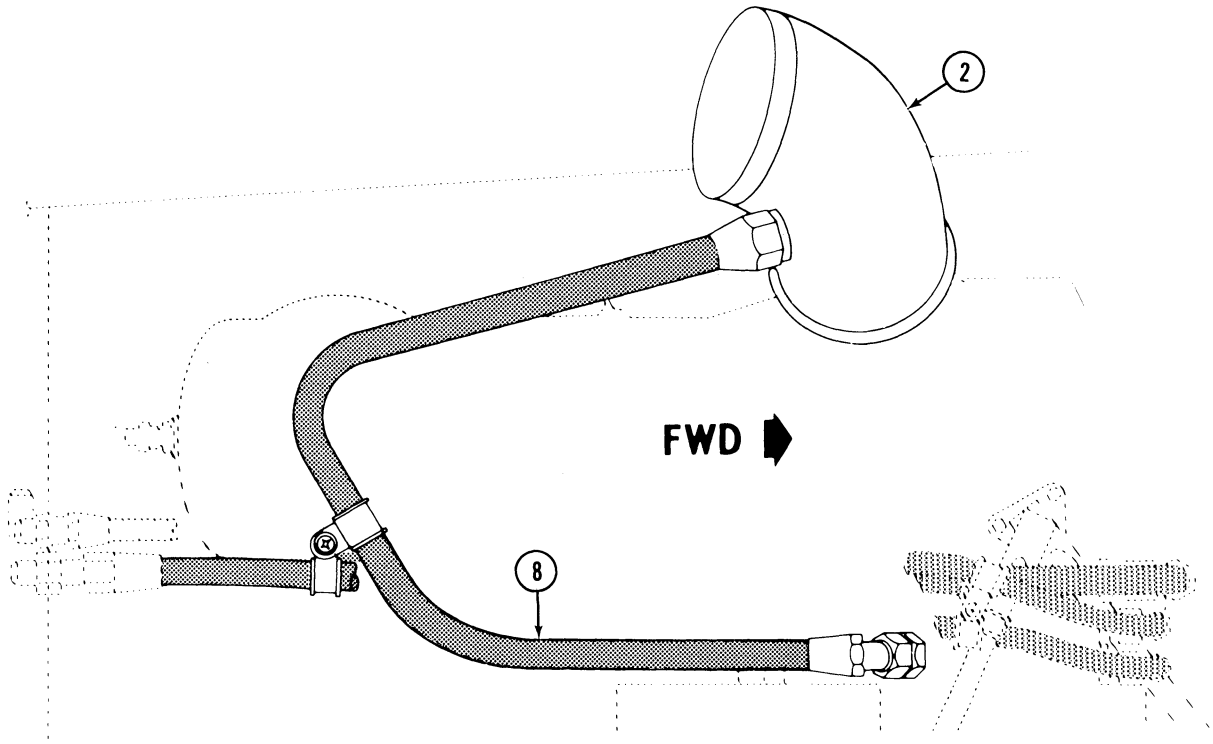

DETAIL C

HELICOPTERS 154 THRU 660 LOOKING INBOARD RIGHT SIDE

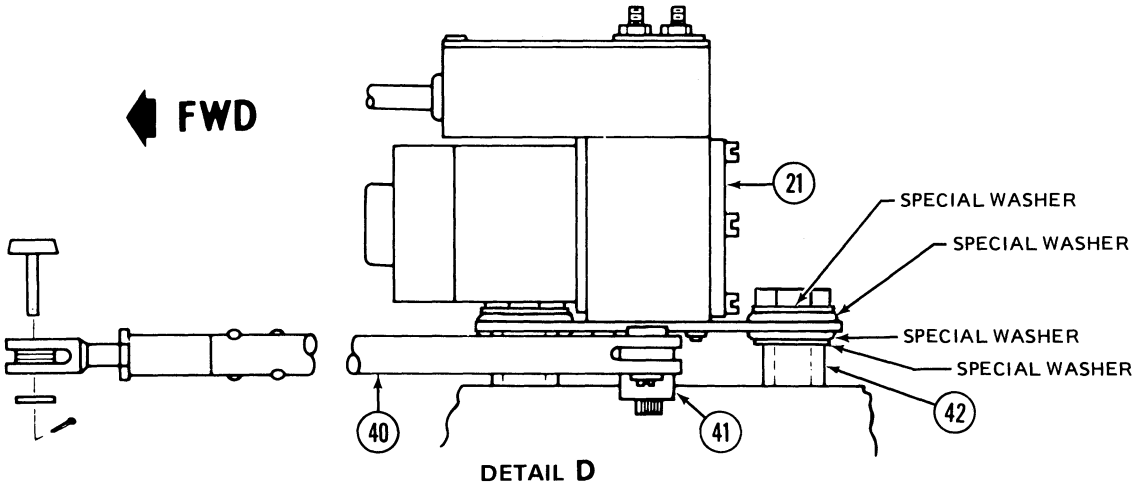

DETAIL D

HELICOPTERS 154 THROUGH 660

206061-3-3F

Figure 7-2. Engine Installation – Model 250-C18 (Sheet 3 of 4)

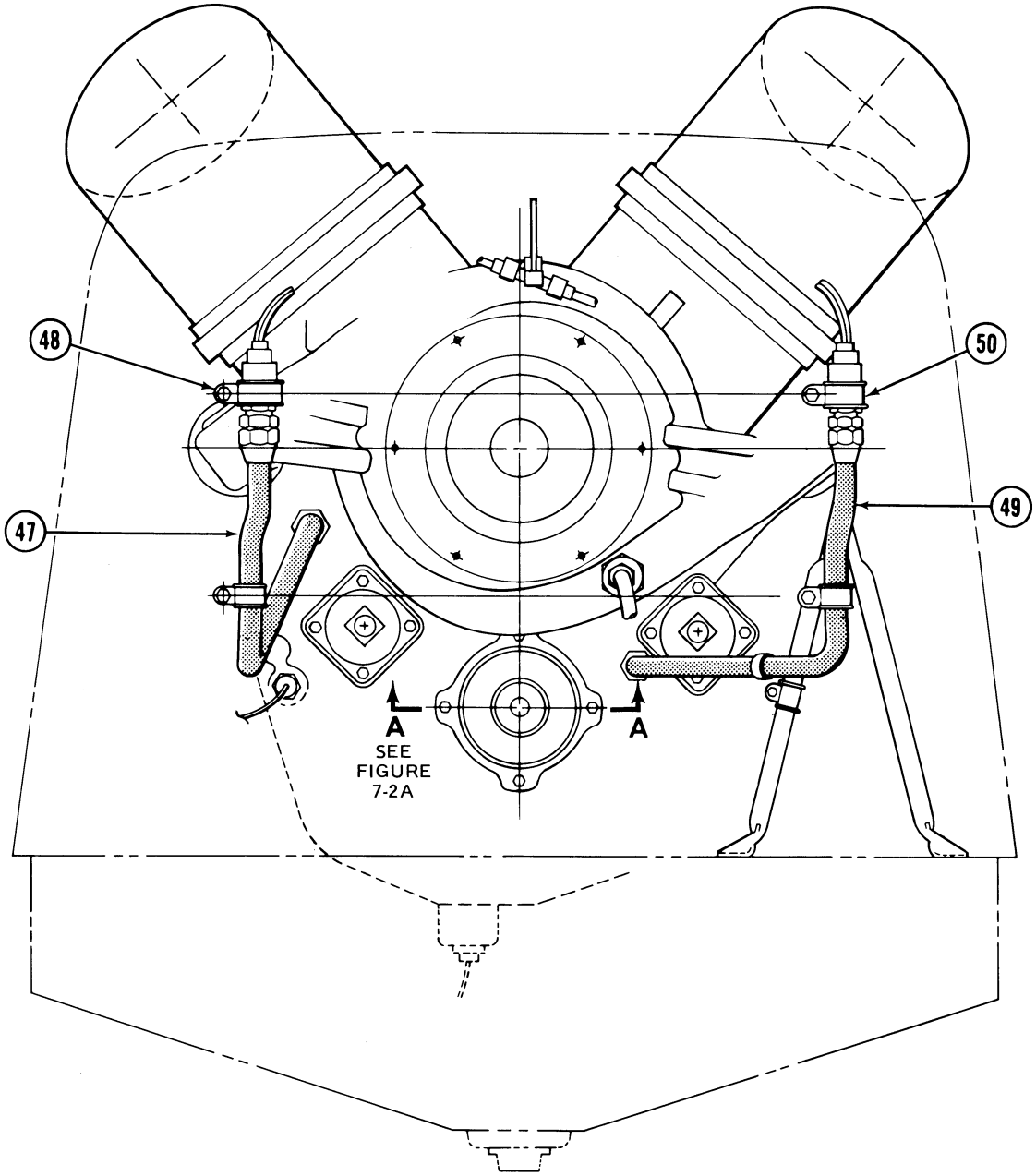

DETAIL E

ENGINE - FRONT VIEW
HELICOPTER S/N 254 THRU 660
AND 672 THRU 715

206061-3-5B

Figure 7-2. Engine Installation — Model 250-C18 (Sheet 4 of 4)

g. On helicopters 4 thrugh 153 only, disconnect the accessory drive outboard vent hose (8) at the lower firewall.

Note

On helicopters with S.I. 206-65 incorporated, disconnect fuel inlet hose at fuel filter.

h. Disconnect the engine fuel inlet hose (9) at the forward firewall and disconnect clamp at lower mount.

Note

Index bellmouth flex coupling to forward firewall to facilitate reassembly.

i. Remove screws (10), nuts (11) and washers (12), attaching the bellmouth (13) to the engine adapter flange located on the forward end of the compressor section.

j. Disconnect gas producer control lever on right side of engine.

k. Disconnect at forward firewall, the free-wheeling hose assemblies (14, 15). Cap off the firewall fittings to prevent gravity drain of transmission and entry of foreign material. On forward engine deck, disconnect the compressor pressure hose (16), engine oil pressure hose (17), and engine torque pressure hose assembly (18).

Note

On helicopters 254 thru 660, and 672 thru 715, disconnect engine oil pressure hose (47) at transducer connection (48) and engine torque pressure hose (49) at transducer connection (50). (See Figure 7-2 detail E).

1. Disconnect the two fuel differential pressure hoses (19, 20) from forward side of fuel pump.

m. Disconnect the droop compensator control lever on left side of engine.

n. Remove the anti-icing control (21) from pad at top of engine and install lift assembly tool (6796963 or equivalent) on pad. Connect hoist to lifting tool and take up slack.

o. Remove engine mount nuts (22) and washers (23) at fittings (25). Gain access to nuts (46A) inside cabin roof through hatbox opening. Loosen hardware only enough to free mount legs (45) from engine fittings (25).

p. Check engine and airframe to ensure engine is free of all connections to airframe before lifting engine.

q. Lift engine carefully and lower onto a suitable stand.

7-6. ENGINE BUILD-UP.

Note

Install parts in any practical order, using the following steps as a guide to build up the replacement engine. Inspect hose assemblies and replace if any of the following conditions exist: Plies have separated, excessive cold flow, chafing, or if hose is hard and inflexible. Ensure hoses and lines are properly supported and clamps are secure. Discard and replace O-rings and gaskets at all points of installation requiring O-rings or gaskets. Accomplish build-up of replacement engine before installation.

a. If engine replacement is due to internal failure and metal contamination is suspected, the following shall be accomplished:

(1) Replace oil cooler (manufacturer does not recommend repairing damaged or contaminated oil coolers).

(2) Clean and flush engine oil reservoir, oil lines and all fittings.

b. Install replacement engine on a suitable stand and install protective covers on compressor inlet and exhaust ports.

Note

If a replacement engine is installed, the engine furnished control levers shall be removed and replaced with lever, (206-061-107-3) power turbine governor and lever (206-061-716) fuel control.

c. Install tachometer generators (24, figure 7-2) on front of engine. Mount with engine supplied hardware.

Note

Studs on the front power take-off pad may require replacement when installing a new engine. (Refer to Section VI , freewheeling installation.)

c-1. Remove existing Allison freewheeling unit (front and rear power take off) seals and install new seals as follows: (See figure 7-2A)

(1) Remove front and rear 6854086 seals using 6796941 oil seal installation and removal kit. Exercise caution not to contaminate or damage engine during seal removal. Discard seals after removal.

(2) Apply a coating of grease (item 21) to the double lip surface of new 524919 seals and install with metal part facing outboard using the 6796941 oil seal installation and removal kit.

d. Install freewheeling assembly. (Refer to Section VI). Install hoses (14, 15, figure 7-2) at forward and aft end of freewheeling unit. Clamp aft hose (14) to engine line.

e. Install restrictor and gasket in engine oil pressure port located at front of accessory gearbox. Install hose (17).

f. Install bushing, reducer and two O-rings in compressor pressure connection. Install hose assembly (16). Install and connect clamps between compressor pressure hose (16) and engine oil pressure hose (17).

Note

Install clamps between compressor pressure hose (16) and engine oil pressure hose (17) on helicopters 4 through 253.

g. Position engine mount fittings (25) over engine pad, align holes and install bolts and washers. Torque bolts and safety with 0.032 inch lockwire (item 19, table 1-1). (Typical at three locations.) Do not safety wire left fitting until engine is installed.

h. Install engine accumulator.

CAUTION

It is mandatory that all Allison 250-C18 Engines installed in Bell 206 Helicopters have two accumulators installed prior to engine installation. The Allison 250-C18 engine incorporates a double check valve which extends further outboard. It is necessary to reposition the outboard accumulator to prevent interference with the cowl.

i. Obtain the second (outboard) accumulator from the removed engine.

j. Install the removed accumulator on the replacement engine as follows: (See figure 7-3)

(1) Disconnect hose assembly (18) from elbow (9). Remove union (17) from elbow (9). Using new packings, install union (17) on accumulator (12) to be added. Torque union 40 to 60 inch-pounds.

(2) Using a new packing, install additional accumulator. Hold elbow (9) with wrench and torque accumulator (12) 40 to 65 inch-pounds.

(3) Use clamp (13) from removed engine; clamp accumulator (12) to firewall using bolt (16), spacer (14), and nut (15) to exiting hole in firewall.

(4) Connect hose assembly (18) to accumulator (12). Torque B nut 80 to 120 inch-pounds. Support hose as necessary to prevent chafing.

(5) Inspect installation to ensure maximum clearance exists between all lines to prevent chafing.

k. Install starter-generator adapter (27, figure 7-2) on engine, mount with engine supplied hardware.

l. Install reducer (29) and packing (30) in engine fuel inlet port located on fuel pump housing. Install hose assembly (9) on reducer. Install drain valve (31) in fuel filter housing with new packing.

m. Install elbow, nut and gasket in accessory drive vent port, and connect hose (8, figure 7-2 , detail A). If venting discharge is to exhaust stack (2), install union and gasket in vent port and connect hose (8, figure 7-2, detail C).

n. Install elbow, nut and packing in engine oil inlet connection located on front of accessory gearbox and install hose assembly (3). Install union and packing in engine oil outlet port and install hose assembly (4). Install union and packing in oil tank vent port and install hose assembly (5). Connect clip (6) from hose clamps to engine

heat shield. New engine heat shield may have to be drilled for clip (6).

o. Install restrictor assembly and packing in engine torque pressure port and install hose assembly (18).

p. Install the exhaust collector drain tube (32), heat shield drain (33) and the combustion chamber drain (34). Install a union and packing in the fuel pump seal drain port and connect drain tube (35). Connect drain tubes to engine lines with clamps.

q. Install union (37) and packing (36) in forward side of fuel pump at the after filter pressure drop port and install reducer (39) and packing (38) in the before filter pressure drop port.

r. Inspect all installations for security and inspect engine intake opening for foreign objects.

7-7. INSTALLATION — ENGINE ASSEMBLY.

a. Install lift assembly tool on pad at top of engine. Connect hoist and carefully lower engine into the airframe, aligning the engine fittings (25, figure 7-2) with the engine mounts (45). Engage the mounts (45) with studs on fittings (25) and install washers (23) and nuts (22). Torque nuts (22) 125 to 145 inch-pounds. Torque engine support nuts (46A) to 90 inch-pounds. After the engine is secured to the mounts, remove the hoist and lift assembly. Connect the linear actuator support brace to the left mount fitting. Safety bolts in fitting (25) with 0.032 inch lockwire (item 19, table 1-1).

Note

Retorque engine mount nuts (22) 125 to 145 inch-pounds and engine support nuts (46A) to 90 inch-pounds at the first 100 hour inspection and after each engine change.

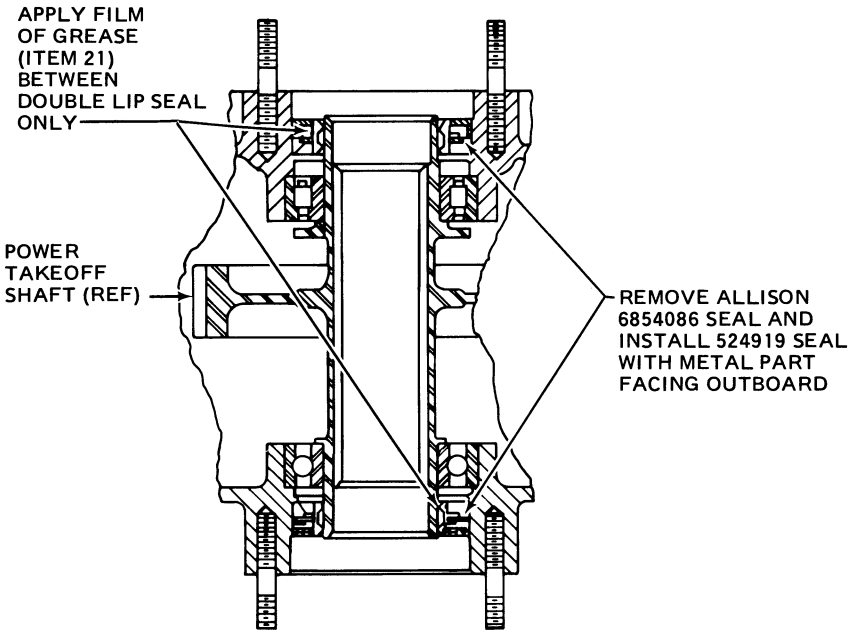

FREE-WHEELING UNIT SEAL INSTALLATION
VIEW **A-A**

L206063-33

Figure 7-2A. Seals Installation — Freewheeling Unit

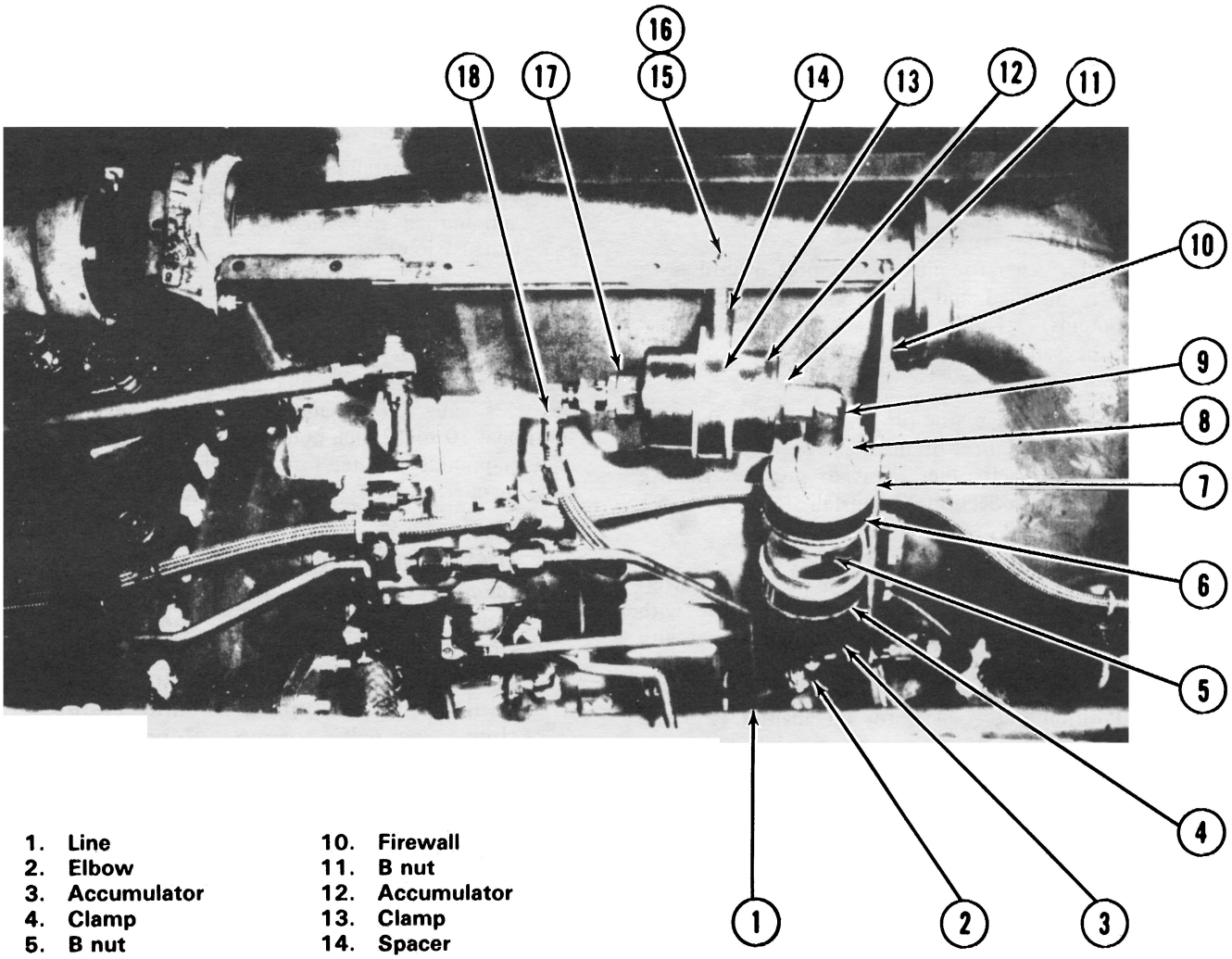

1. Line
2. Elbow
3. Accumulator
4. Clamp
5. B nut
6. Deleted
7. Double check valve
8. B nut
9. Elbow
10. Firewall
11. B nut
12. Accumulator
13. Clamp
14. Spacer
15. Nut
16. Bolt
17. Union
18. Hose assembly

206061-80

Figure 7-3. Installation of Second Accumulator on Blue Ribbon Engine

b. Remove compressor inlet cover and align the bellmouth assembly (13) with the forward flange of engine inlet and install screws (10), washers (12) (one under screw head and one under nut) and nuts (11).

c. Install anti-icing control actuator (21, figure 7-2) on pad located at top of engine. Install spacers (42) between actuator bracket and engine with the large spacer over the forward hole. Install 3/8 inch bolt and washer in forward hole and 5/16 inch bolts, washers and spacers in the two aft holes. Torque the forward bolt 75 to 110 inch-pounds and the two aft bolts 40 to 65 inch-pounds and safety bolt heads with 0.032 inch lockwire (item 19, table 1-1). Install tube assembly (40) with clevis over the engine valve lever and the other end of the tube over the actuator lever (41). Secure the tube with flathead pins, washers, and cotter keys.

Note

When replacement anti-icing valve (206-062-625-3) is installed, rework tube assembly (206-061-714-5) in accordance with Service Letter 206-106 if not previously accomplished.

Note

Refer to paragraph 7-8 for rigging instructions of the engine anti-icing control.

d. Install tail rotor drive shaft and the engine to transmission drive shaft. (Refer to Section VI.)

CAUTION

The starter generator must be supported until clamp is installed and properly torqued (50 inch-pounds). Failure to support starter generator can result in premature failure of shaft.

e. Check starter-generator (26) to determine that the torsional damper members of the starter-generator are in hard contact with each other so as to provide effective dampening. (Refer tc Section XI.) Install starter-generator as follows:

(1) Clean male and female splines of starter-generator (26), adapter (27), and accessory drive with cleaning solvent (item 77, table 1-1). Lubricate splines with grease (item 82, table 1-1).

(2) Position starter-generator on adapter (27) and install clamp. Tap lightly around clamp while tightening nut to ensure proper seating. Torque nut to 50 inch-pounds.

f. Make electrical connections at the following: temperature indicating harness, anti-ice control actuator, governor actuator, chip detectors, power turbine tachometer, gas producer tachometer, ignition exciter and fuel pressure differential switch. (Refer to Section XIII.) Replace clamps securing electrical cables to engine.

g. Connect the following hose assemblies: engine oil outlet (4), oil inlet (3) and oil tank vent (5) at the aft firewall; engine fuel inlet hose (9) at fitting on forward firewall, accessory drive overboard vent (8) to fitting on lower firewall (helicopter 4 through 153), free wheeling assembly hoses (14, 15) to unions on forward firewall, fuel pressure differential switch hoses (19, 20) to forward side of fuel pump, engine oil pressure hose (17) to engine deck fitting, engine torque pressure hose (18) to deck fitting, compressor pressure hose (16) to deck fitting. Clamp hose assemblies as illustrated in figure 7-2.

Note

On helicopters 254 through 716, connect engine oil pressure hose (47) to transducer connector (48) and engine torque pressure hose (49) to transducer connector (50). (See Figure 7-2 , detail E)

h. Connect and rig engine controls. (Refer to paragraph 7-48 .)

i. Inspect engine installation to ensure that all installations are complete. Check security of installation.

CAUTION

Prior to installing exhaust stacks, inspect attaching flange area for warping, dents, cracks and burned spots that would cause a leaking exhaust joint.

j. Install cowl and exhaust stacks. (Refer to Section VIII for cowl installation instructions.) Position exhaust stack (2, figure 7-2) and clamp (1) on engine. Tap clamps lightly to seat clamps while tightening clamp nut until clamp is snug on exhaust stack and flange. Add an additional 10 to 12 inch-pounds torque, but do not exceed 25 inch-pounds torque. Install opposite exhaust stack in same manner.

Note

If exhaust stack clamp (1) is of the two piece type, position clamps on stack with studs facing outboard, install nuts finger tight and torque to 30 inch-pounds. Grasp top of stack and shake, while lightly tapping around clamp, then recheck torque. Repeat this procedure until the required torque can be maintained. Safety wire nuts to clamp. After 30 minutes of engine operation, recheck torque. If check reveals loss of torque, retorque to 30 inch-pounds and operate engine an additional 30 minutes and repeat entire procedure. Safety wire nuts to clamp with 0.032 inch lockwire (item 19, table 1-1).

Note

If right side exhaust stack has the overboard vent hose attachment, install hose after installing exhaust stack and clamp. (See Figure 7-2 , detail C.)

k. Connect battery.

CAUTION

After power plant change and/or disconnecting engine oil inlet hose, oil pump priming shall be accomplished prior to engine start.

l. Refill engine oil reservoir. (Refer Section I for amount and grade.) Refill transmission to replace oil lost in freewheeling unit and lines. To prevent possible damage to the engine, the following procedure should be used to prime the engine oil pump prior to starting the engine.

Note

Engine oil pumps will normally prime themselves. However, there have been a few instances where the pumps have continued to run in a dry or unprimed condition following the initial engine start.

(1) Disconnect the engine oil pump inlet hose assembly from the elbow fitting.

(2) Loosen the elbow lock nut and rotate the elbow to an upright position.

(3) Fill the elbow to spillover with engine oil.

(4) Reposition elbow and connect the engine oil pump inlet hose assembly and tighten appropriate components.

CAUTION

Do not exceed starter limitation while motoring engine.

m. Prior to starting, motor engine until oil pressure is indicated. Do not exceed time limits established for energized starter. (Refer to Model 206 Flight Manual, Section I)

Note

If pressure is not indicated within 30 seconds, stop and determine cause.

n. Check for indications of leaks after ground run. If leaks are found, correct and refill reservoir as required.

Note

If a new engine is being installed or if a new turbine outlet temperature, TOT, harness is installed on the engine at any time, check the TOT circuit in the aircraft for an 8 plus or minus 0.05 ohms in accordance with Section XI. An instrument which will measure the resistance in the range and accuracy of this requirement is available from Wheatstone bridge Model RN-1, Crockett Engineering Co., P.O. Box 47287 Dallas, Texas 75247.

Note

After test flight check engine oil filter for contamination.

7-8. RIGGING ENGINE ANTI-ICING CONTROL. (See figure 7-2)

a. Energize actuator (21) to OFF position. Observe that shaft of actuator turned counter-clockwise (looking at end of shaft) until internal micro switch stops motor.

b. Move anti-icing valve lever (41) on engine to full forward position. (Closed position)

c. Insert pin through clevis on tube assembly (40) and valve lever on engine, with clevis at midpoint extension of threads.

d. Insert pin through tube assembly (40) and lever (41).

e. Install splined end of lever (41) to actuator shaft. It may be necessary to adjust clevis on tube assembly (40) so lever (41) will line up with serrations on actuator and maintain closed position of valve on engine.

f. Remove pin from clevis end of tube assembly (40). Lengthen tube assembly (40) by turning clevis one-half turn to preload valve in the closed position. Reinstall pin in clevis.

g. Actuate motor to full ON (Open position) position and check that actuator is stopped by the internal microswitch and not by mechanical means.

7-9. POWER PLANT SYSTEMS.

7-10. DESCRIPTION. The major systems of the basic engine are fuel, lubrication, electrical, anti-icing and compressor bleed air. Refer to Allison Operation and Maintenance Manual No. 5W2 for a detailed description of each system.

7-11. ENGINE MAINTENANCE.

7-12. GENERAL. The maintenance procedures outlined in the following paragraphs, include only those systems and controls that are not a part of the basic engine. Maintenance and Overhaul instructions for the basic engine are found in Allison Publications 5W2 and 5W3.

7-13. ENGINE MOUNTS. (Figure 7-2.)

7-14. DESCRIPTION. The engine is supported on the service deck with three bi-pod mounts (45) located on the right, left and lower side of the engine. Shims are provided at each mount leg for engine alignment.

CAUTION

If the engine mounts are removed, do not remove the bonded shims. These shims directly affect engine to transmission alignment. If removal is required, mark the shims to prevent loss or intermixing.

7-15. REMOVAL – ENGINE MOUNTS.

a. Remove engine. (Refer to paragraph 7-5)

b. Remove bolts, washers and nuts securing mounts to the airframe.

7-16. INSPECTION – ENGINE MOUNTS.

a. Inspect the tubes assemblies and weld areas of the mount for cracks. If cracks are found, replace the mount.

b. Inspect mounting bolt threads and replace bolts as required.

7-17. INSTALLATION – ENGINE MOUNTS.

a. Thoroughly clean oil and dirt film from engine mount legs (1).

(1) Polish out nicks and scratches.

(2) Apply one coat of zinc chromate primer (item 80, table 1-1) to repaired surfaces and engine mount covers (2).

(3) Wrap engine mount legs (1) with bag of seal compound, 0.125 inch x 0.50 inch (item 154), or fill engine mount cover (2) halves with bag sealant (item 154).

(4) Install covers (2) on engine mount legs (1), locating evenly between leg gussets. Remove excessive compound squeeze out.

(5) Apply sealant (item 110) to split line and ends of cover.

b. Position mounts on the airframe and install bolts, washers (one under bolt head, one under nut) and nuts. Torque nuts.

c. Install engine. (Refer to paragraph 7-7 .)

7-18. FUEL SYSTEM. (Figures 7-4 and 7-5.)

7-19. DESCRIPTION. The fuel system incorporates a single bladder type fuel cell located below and aft of the passenger seat. Installed within the fuel cell are two electrically operated boost pumps, lower and upper tank indicating unit and sump drain valve. The boost pumps are interconnected and supply fuel through a single hose assembly to the fuel shutoff valve and from the shutoff valve to the engine mounted fuel filter and pump. The boost pumps incorporate pressure switches in the discharge ports and drain plugs in the pump drain port. The fuel cell is filled from the right side and has a capacity of 76 U.S. gallons. Access to the boost pumps, lower tank unit and drain valve is from the bottom of the fuselage and access to the upper indicating unit is gained from a cover plate located on deck aft of passenger seatback. Access to the fuel shutoff valve and vent line is in the fuel compartment located on the right side above the filler cap. Provisions are also made in the fuel compartment for combustion heater fuel, fuel pressure instrument line and fuel pump purge line.

7-20. MAINTENANCE – FUEL SYSTEM. General maintenance of the fuel system consists of visual inspections, ground operational checks, filter replacement, control linkage adjustment and replacement of piping, fittings, seals and components.

Note

Refer to Section XI and table 7-1 below for trouble shooting fuel system. Refer to Operation and Maintenance Manual, Allison Publication 5W2 for trouble shooting engine fuel system.

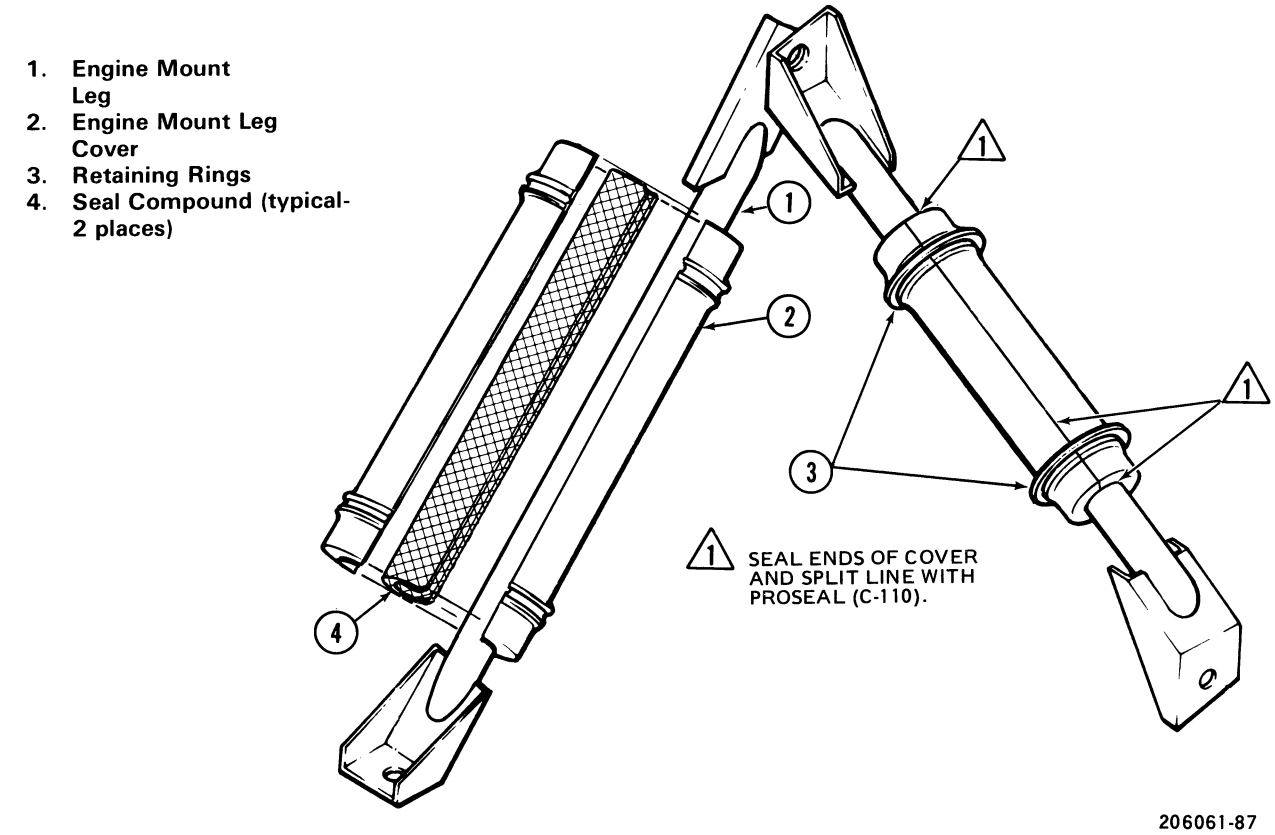

Figure 7-3A. Installation of Engine Mount Leg Covers

Table 7-1. Trouble Shooting Fuel System

INDICATION OF TROUBLE	PROBABLE CAUSE	CORRECTIVE ACTION
Engine fails to light off	Insufficient fuel in cell	Fill cell with correct fuel
	Insufficient or no fuel pressure to engine pump	Turn on boost pumps and fuel shut-off valve
	Boost pump inoperative	Check out pump per Section XI Replace pump if required
	Fuel contaminated	See engine operation and Maintenance Manual
	Defective shutoff valve, or valve fails to operate when selected	Replace valve. Refer to Section XI

Table 7-1. Trouble Shooting Fuel System (Cont)

INDICATION OF TROUBLE	PROBABLE CAUSE	CORRECTIVE ACTION
Fuel quantity system not indicating or has incorrect reading	Defective boost pump, tank indicating units or electrical malfunction	Refer to Section XI
No pressure, fuel pressure gauge fluctuates or has erratic readings	Air trapped in fuel boost pump	Bleed boost pumps. (Refer to paragraph 7-35. 1.)
Fuel pump caution light on	Defective boost pump or fuel pressure switch	Refer to Section XI. Replace pump or switch
Fuel filter caution light on	Clogged filter	See engine manual
Fuel boost pumps fail to operate when breaker is closed or circuit breaker trips	Electrical malfunction	Refer to Section XI

7-21. REMOVAL – FUEL CELL.

WARNING

All defueling operations should be performed in an area where fire hazards are reduced to a minimum.

CAUTION

Handle the fuel cell with extreme care during removal to avoid damage to the cell. Protect all openings to prevent entry of foreign material.

a. Disconnect battery.

b. Defuel helicopter with a 1-1/2 degree nose down attitude.

WARNING

Observe the following safety precautions during defueling operations:

(1) If fire fighting personnel are available, notify of intention to defuel.

(2) Wear shoes that are free of metal taps or protruding nails.

(3) Clear paths shall be maintained around helicopter being defueled, at all times, to permit rapid evacuation of vehicles and personnel.

(4) Avoid defueling helicopter near drainage ditches or low places where combustible mixtures may accumulate.

(5) Helicopter will not be defueled when an electrical storm is in the immediate area.

(6) Position defueling unit as far away from helicopter as hose will permit, up wind and in a position so that it may be driven or towed away from the area in event of an emergency.

(7) All venting doors on defueling unit shall be open.

(8) Discharge static electricity from self before handling or touching metal in vapor area.

(9) A static ground cable shall be connected from servicing unit to grounding stake and from helicopter to grounding stake.

WARNING

A static ground shall be provided for all methods used in defueling helicopter.

(10) A cable shall be connected from helicopter to servicing unit.

(11) Ground fuel nozzle to helicopter.

(12) All operating equipment, ground power plants, ground heaters, air compressors, etc., which are not required in defueling operation will be shut down and moved away from helicopter.

(13) All helicopter electrical power shall be OFF.

Note

If power is required, turn battery switch ON prior to defueling operation.

(14) Personnel shall not be allowed to remain in helicopter unless required for defueling.

(15) The area shall be equipped with at least one fully charged, 50 pound CO_2 fire extinguisher equipped with an extension assembly.

(16) Access to fire extinguishers on vehicles will not be obstructed.

(17) Visually check hose for breaks or worn spots before starting defueling.

(18) The area shall be 500 feet from any radar.

(19) The helicopter shall be 100 feet from any building or smoking area.

(20) No other aircraft shall be allowed to operate under its own power within 100 feet of the defueling area.

(21) Avoid contact or inhalation of fuel. When contact cannot be avoided, wash skin with mild soap and water.

(22) All equipment (other than defueling equipment) or other sources of ignition shall be kept outside the area.

(23) Use caution when placing defueler hose in fuel cell to prevent damage to fuel cell or components mounted within the cell.

(24) In the event of a major spillage of fuel, all ground powered equipment will be shut down. All personnel will leave the vicinity and be positioned around the aircraft to prevent any powered equipment or sources of possible ignition from entering the area. The fire department will be notified (if available) and take action to render the area safe prior to moving aircraft or equipment. In the event of fire, every effort will be made to move aircraft and servicing unit to a safe place. Large fuel spills may be blanketed with foam or washed away with water and allowed to dry or evaporate before area is used again.

CAUTION

If fuel cells are purged for any reason, avoid build-up of pressure in the fuel cell. There should be no measurable build-up of pressure in the fuel cell during purging operations.

Note

Open sump and boost pump drains to remove residual fuel after defueling operations.

c. Remove passenger seat upholstery.

d. Remove center panel of seat support and panel from seatback. Remove coverplate on deck aft of passenger seat for access to the upper tank unit.

e. Remove screws securing filler cap and adapter assembly (1, figure 7-4). Disconnect fuel supply hose (2) at union (37), disconnect hose (68, see detail A) at fitting at top of fuel cell. Access to hose is through filler opening (1).

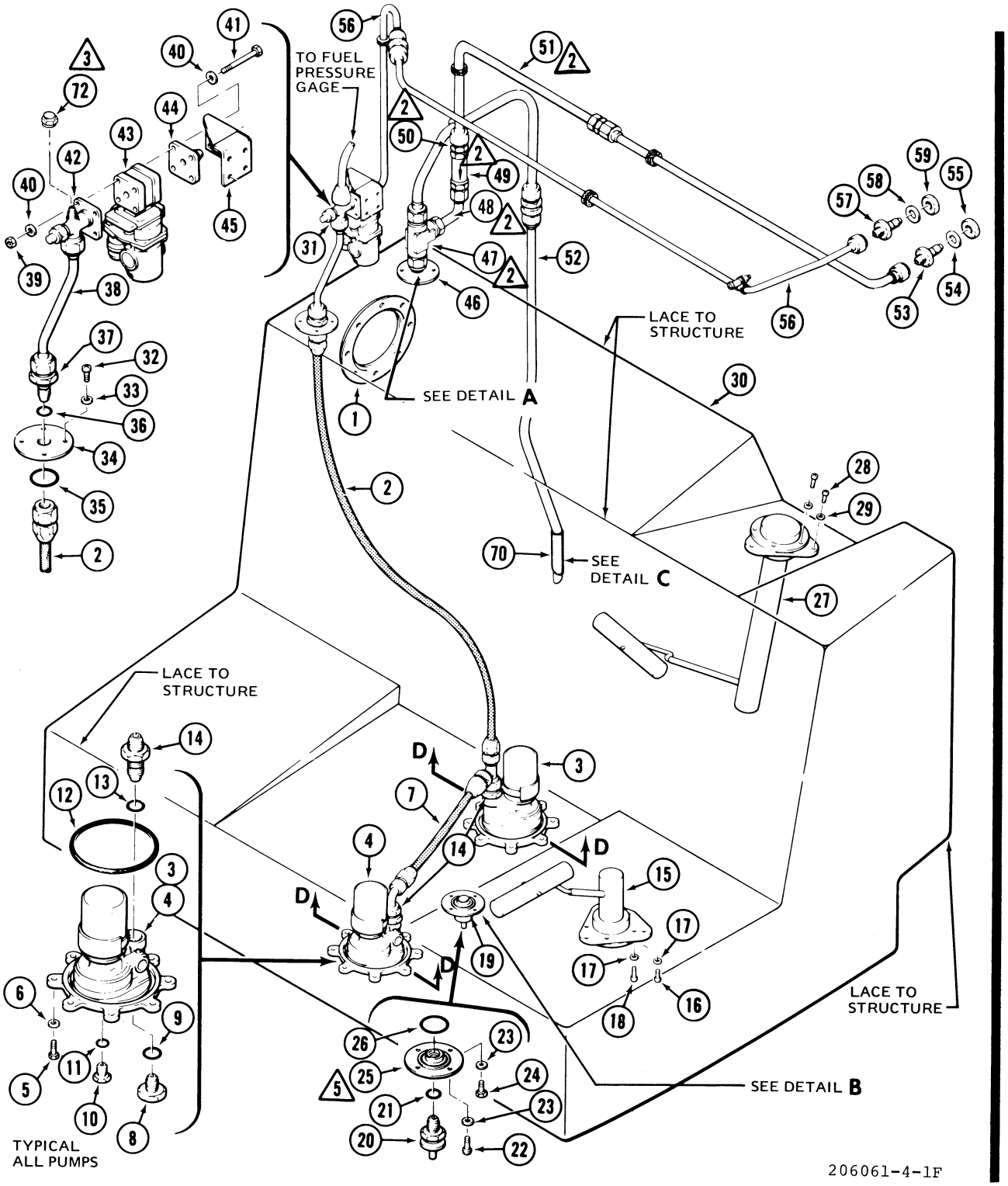

Figure 7-4. Fuel Supply System (Sheet 1 of 4)

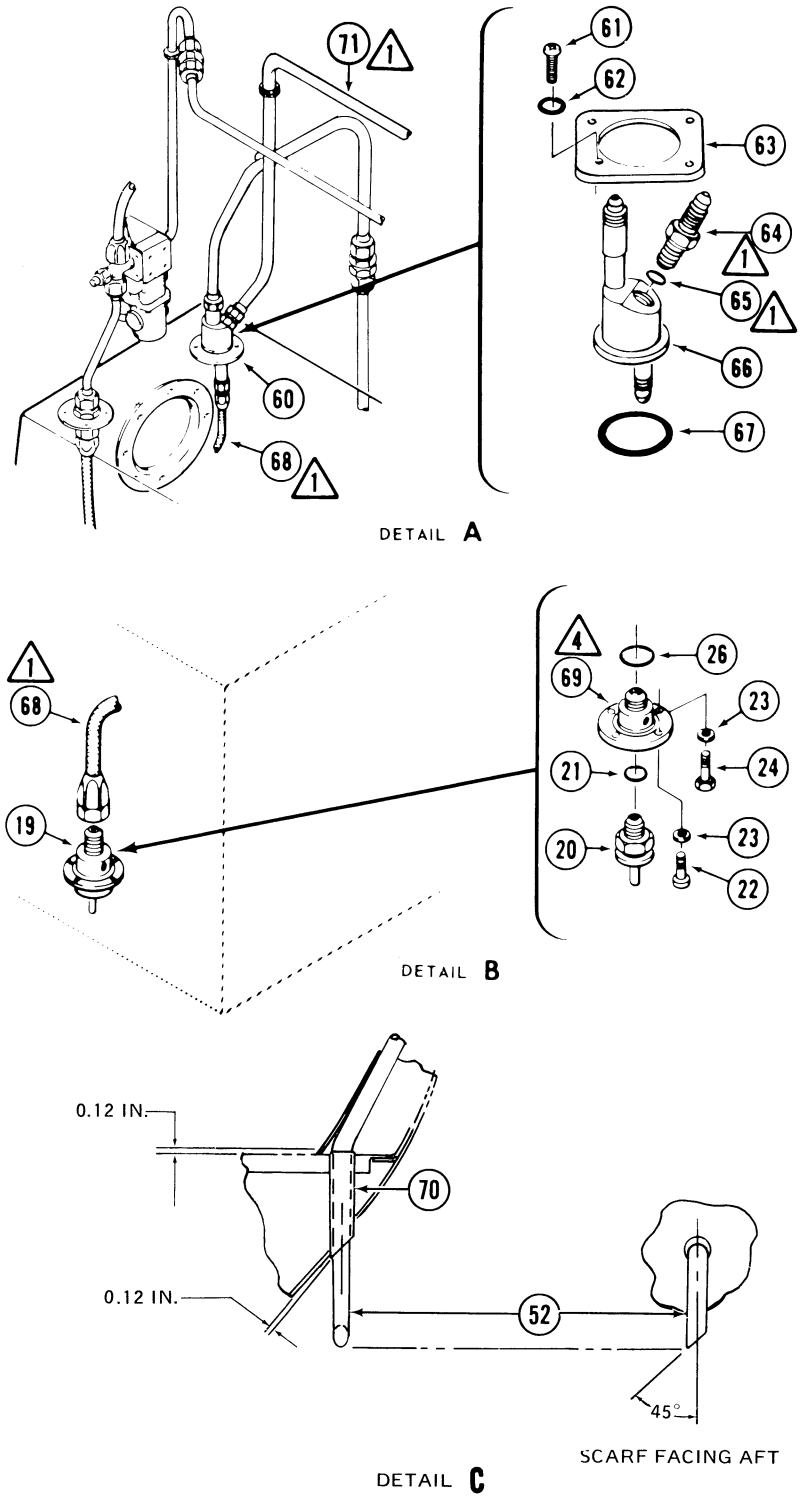

Figure 7-4. Fuel Supply System (Sheet 2 of 4)

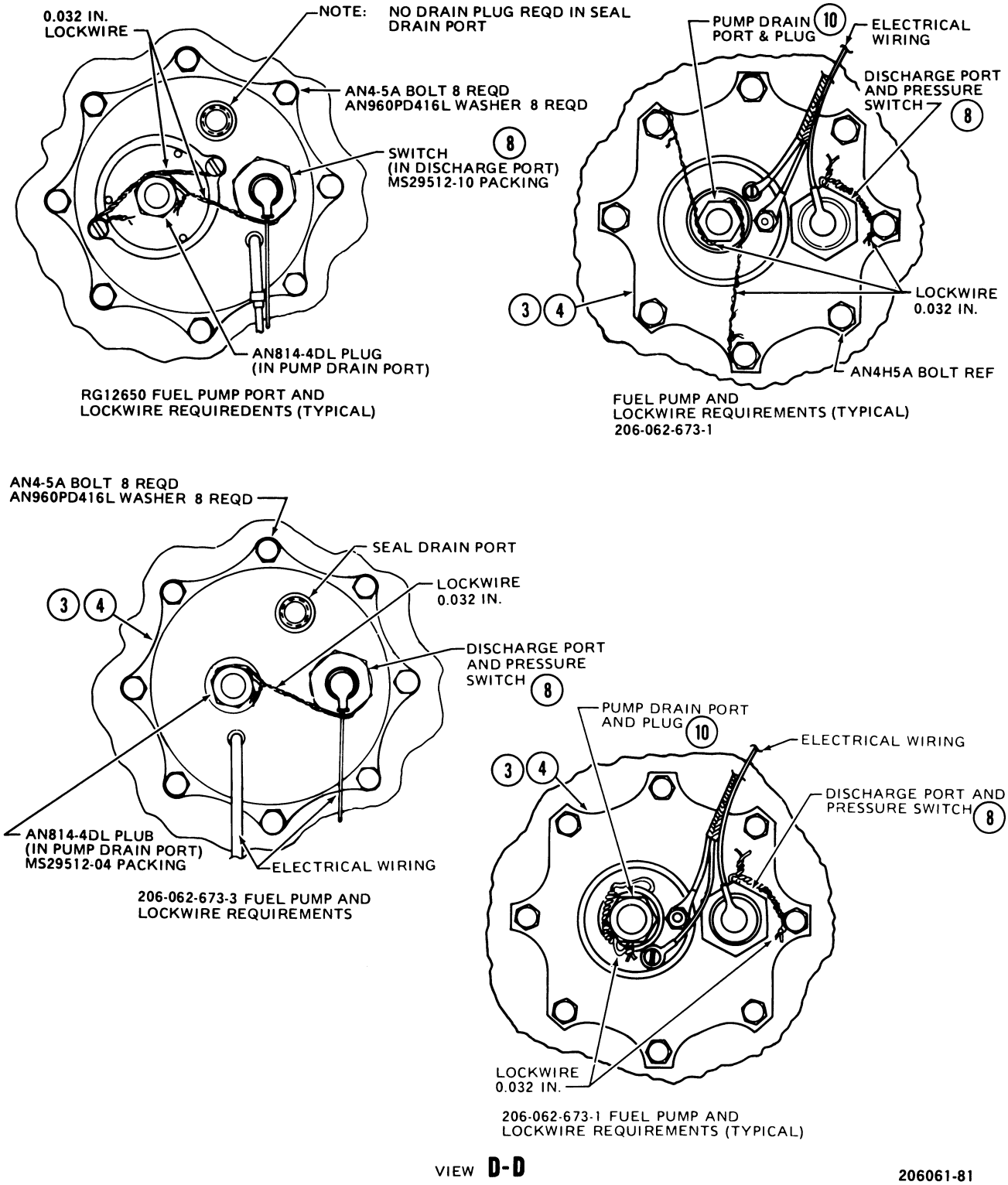

Figure 7-4. Fuel Supply System (Sheet 3 of 4)

1. Adapter
2. Fuel Supply Hose
3. Aft Boost Pump
4. Forward Boost Pump
5. Bolt
6. Washer
7. Hose
8. Pressure Switch (Discharge Port)
9. Packing
10. Plug (Pump Drain Port)
11. Packing
12. Packing
13. Packing
14. Check Valve
15. Lower Indicating Unit
16. Screw
17. Washer
18. Screw
19. Sump Drain
20. Drain Valve
21. Packing
22. Screw
23. Washer
24. Bolt
25. Fitting 5
26. Packing
27. Upper Indicating Unit
28. Screw
29. Washer
30. Fuel Cell
31. Shutoff Valve Assembly
32. Screw
33. Washer
34. Fitting
35. Packing
36. Packing
37. Union
38. Tube
39. Nut
40. Washer
41. Bolt
42. Cross
43. Valve
44. Connector
45. Mount Bracket
46. Fitting
47. Tee 2
48. Tube 2
49. Check Valve 2
50. Reducer 2
51. Purge Line 2
52. Vent
53. Union
54. Washer
55. Nut
56. Fuel Supply Tube
57. Union
58. Washer
59. Nut
60. Tank Vent
61. Screw
62. Washer
63. Flange
64. Union 1
65. Packing 1
66. Fitting
67. Packing
68. Hose 1
69. Fitting 4
70. Hose
71. Tube 1
72. Cap 3

NOTES:

1. Helicopters 254 thru 660, 672 thru 715.
2. Helicopters 4 thru 253.
3. Helicopters 304 thru 440.
4. Helicopters 254 thru 583.
5. Helicopters 4 thru 253, 584 thru 660, and 672 thru 715.

206061-4-4A

Figure 7-4. Fuel Supply System (Sheet 4 of 4)

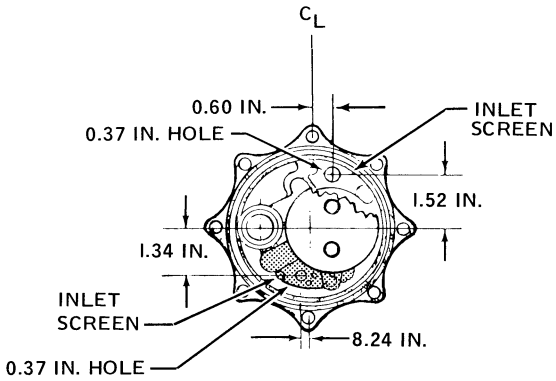

LEAR SIEGLER INC.
MODIFICATION PART NO. RGI2650D
PART NO. RG I2650

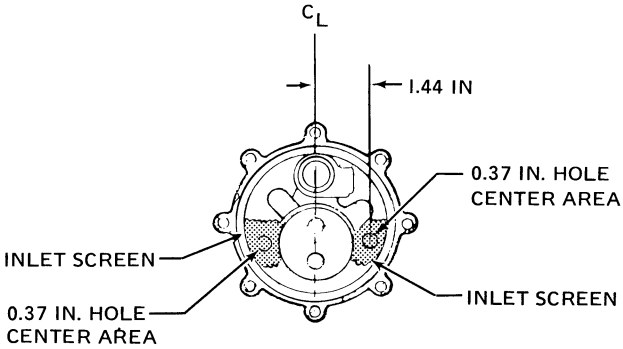

STELLAR HYDRAULICS CO.
PART NO. 286I

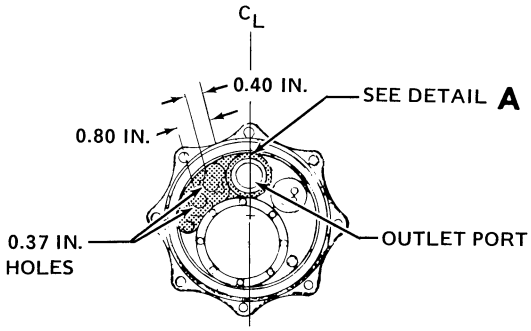

GLOBE INDUSTRIES DIV'
PART NO. I64AI36
MODIFICATION PART NO. I64AI76.
COMPLIANCE WITH DETAIL **A**
CHANGE TO PART NO. I64A204.

MODIFICATION PROCEDURE

1. Remove both the front and rear fuel pumps, or prior to installation of a replacement fuel pump accomplish the following:

   a. Inspect inlet screen (S) in each fuel pump for presence of two 0.37 inch holes. If holes are not present, invert pump so that screen(s) are down and drill two 0.37 inch holes. Holes are to be located as illustrated according to part No. of fuel pump. Ensure all drill filing are removed.

   b. On Globe Industries 16A136 or 164A176 fuel pumps locate and drill (No. 60 drill) hole in the outlet port as illustrated in detail A. Invert pump for drilling operation and ensure all drill filing have been removed.

   c. Reidentify fuel pumps as indicated.

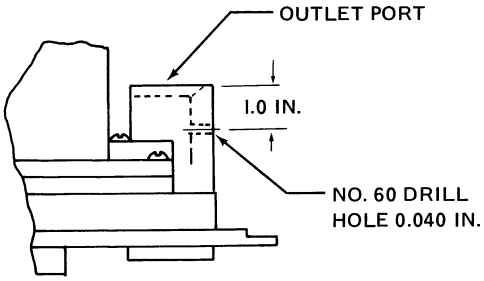

DETAIL **A**

206061-50A

Figure 7-4A. Modification of Fuel Boost Pumps

f. Remove panel from fuel compartment located on right side, above the filler cap. Remove screws and washers attaching fittings (34 and 46) or flange (63, figure 7-4, detail A) to top of fuel cell.

g. Disconnect electrical connections from boost pumps (3, 4) and tank indicating units (15, 27). Remove bolts (5) and washers (6), securing the boost pumps to bottom of fuel cell. Lower the forward pump (4) and disconnect hose assembly (7) from pump check valve (14). Remove the aft pump (3) by feeding the hose assemblies (2, 7) through the pump mount opening. (Helicopters 254 thru 660 and 672 thru 715, disconnect hose (68, figure 7-4 detail B) at fitting (69) and remove hose through pump mount opening.)

h. Remove screws (16, 18) and washers (17) attaching the lower indicating unit (15) and remove the unit. Remove screws (22) and bolt (24), attaching the drain valve (19), remove valve. Remove the coverplate located on deck aft of the passenger seat and remove screws (28) securing the upper tank indicating unit (27) to the top of fuel cell and lift out. Collapse the cell (30) and remove the nylon cord lacing at aft upper and lower edges and forward edge of cell. Remove the cell through the seat opening.

7-22. INSPECTION, STORAGE AND HANDLING – FUEL CELL.

a. Inspect fuel cell immediately prior to installation for damage which may have occurred during crating or removal from shipping container.

b. Inspect fuel cell for leaks after installation. (Refer to paragraph 7-25)

c. Store fuel cells in original shipping containers at room temperature. Do not store fuel cells where they will be subjected to heat or extremes of humidity.

d. Handle fuel cells carefully to avoid damage. Observe the following precautions:

(1) Leave fuel cells in original shipping containers until ready to install in helicopter.

(2) Do not drag cells or pick up by fittings. Transport cells on carts. If a cell must be transported outside installation area, place it in original shipping containers.

(3) Do not handle cell with sharp pointed tools.

(4) Do not place cells on any surface with sharp projections which could damage cell.

(5) Do not stack cells except in original shipping containers.

(6) Do not handle cells when they are too cold to be flexible.

(7) Do not allow cells to remain in any strong light any longer than absolutely necessary. Do not allow light bulbs to contact cell. Fluorescent inspection lights are recommended for use in fuel cells.

7-23. CLEANING INSTRUCTIONS — FUEL CELL. Bladder fuel cell which may have accumulated heavy fungus growth due to contaminated fuel may require accomplishment of the following recommended procedures.

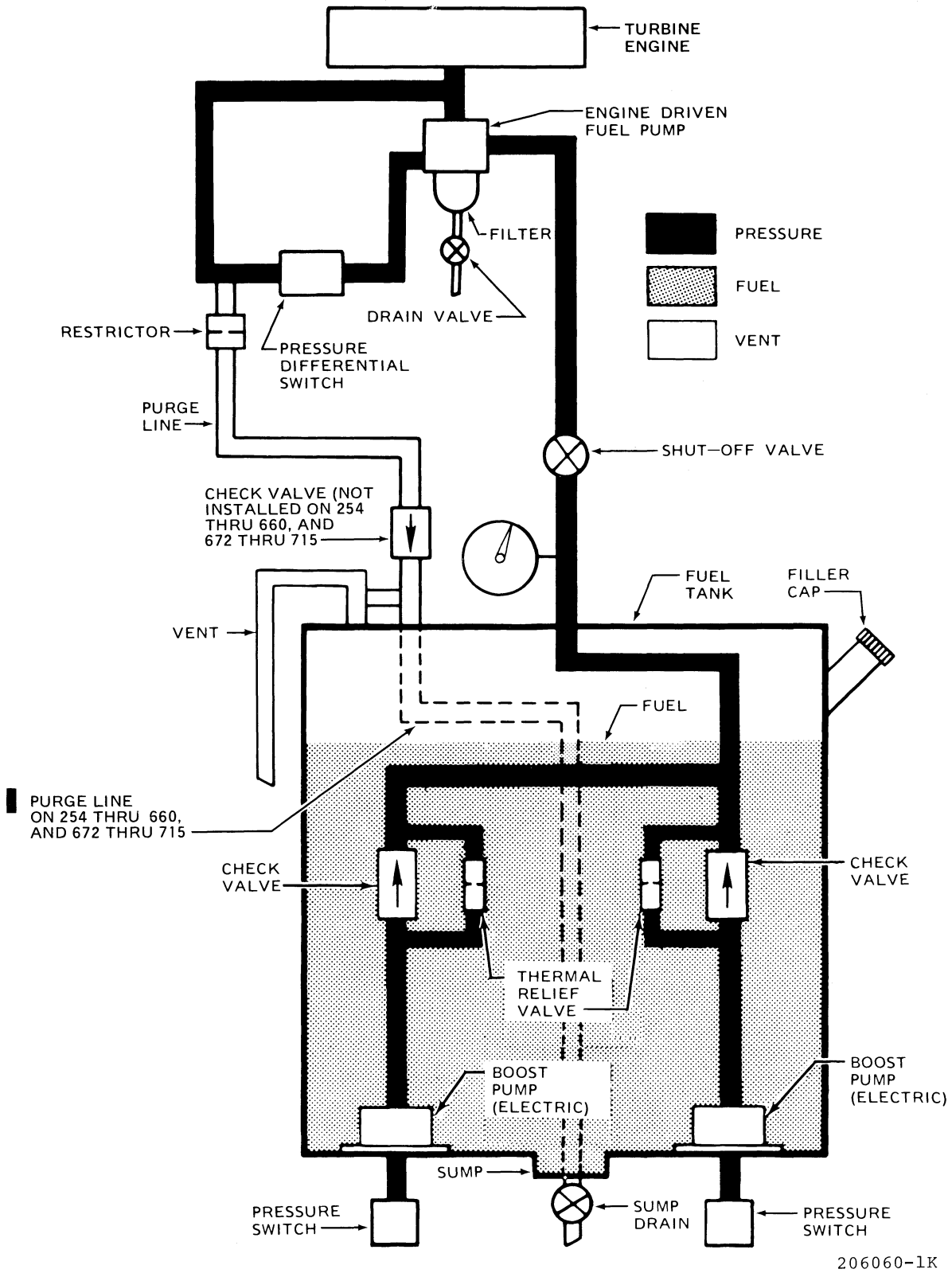

Figure 7-5. Fuel System Schematic (250-C18 Engine)

Note

Bladder fuel cell construction used in the Bell Jet Ranger has buna coated fabric inner plies. This buna rubber may be attacked to some degree by micro organism action. The degree of attack is very minor.

a. For fuel cell removal procedures, refer to paragraph 7-21.

b. The presence of fungus in the fuel cell is usually caused by improper servicing and storage of jet fuels. To help alleviate the problem of fungus in the cells, suitable filters and water traps should be used in the fuel storage tank complex and servicing equipment.

Note

A fuel additive meeting the requirement of specification MIL-I-27686 and approved by the FAA as PFA-55MB is recommended to be added routinely to the helicopter fuel cell while refueling is being accomplished. This is the same as the anti-icing additive recommended in the 206 Flight Manual. (Phillips product distributed as "Prist" meets this requirement.) Usually one treatment of PFA-55MB is adequate to kill the bacteria and regrowth in the fuel cell for some time.

c. If fungus is present in the fuel cell, contamination usually is present in the fuel filter and it should be thoroughly cleaned or replaced.

d. Remove all fungus growth from fuel cell by hand or with a soft scrub brush using warm or hot water

CAUTION

If hot water is used to clean fuel cell, it is recommended that the temperature of the hot water be limited to 160°F (71°C). Hotter water constitutes a hazard to personnel.

CAUTION

Do NOT use soaps or strong detergents when cleaning fuel cell. Certain powerful detergents are detrimental to the buna type rubber and soaps can react with fuel to form a compound which tends to plug fuel filters.

e. When fungus is observed in fuel cell area, wipe the cell clean with cloths moistened with denatured ethyl alcohol (item 119). Burn wiping cloths after cleaning to destroy fungus.

CAUTION

Under NO circumstances should methyl-ethyl-ketone or similar solvents be used for cleaning fuel cell.

f. Jet fuels may be used for cleaning fuel cell because of one advantage, that being, they are oily and assist in protecting the cell's inner liner against aging if the cell remains out of service for several weeks without fuel.

7-24. REPAIR — FUEL CELL.

a. Field repairs are permitted on the fuel cell in all areas except any radius, any fitting area, or to any cut or tear longer than one inch. Cells with damage beyond these limits should be returned for repair to the fuel cell manufacturer at one of the addresses listed in the next paragraph.

b. Inspect fuel cell to determine the manufacturer (marked on the fuel cell). A repair kit, complete with all materials and instructions for making field repairs, is available from the respective cell manufacturer.

(1) Order repair kit, number RK-30S, from Uniroyal Inc., 312 N. Hill Street, Mishawaka, Indiana, 46544.

(2) Order repair kit, number SK-2180-2, from Firestone Coated Fabrics Co., Division of Firestone Tire and Rubber Company, 1200 Firestone Parkway, Akron, Ohio, 44317.

7-25. INSTALLATION – FUEL CELL.

CAUTION

Inspect fuel cell cavity for foreign objects before installation of fuel cell. Exercise extreme caution to preclude dropping of tools, hardware, etc. in the fuel cell cavity. Ensure that all sharp edges, corners and rivet heads are protected with No. 853 tape (item 1) and/or chafing strips. Use of proseal is permissible. Be sure that cell is warm enough to be flexible.

a. Insert the collapsed cell through the seatback opening and position the forward section of the cell under the seat. Lace and tie securely the forward edge of the cell to the seat support with nylon cord MIL-C-5040, Type III. With the cell in a collapsed position, lace and tie the aft lower edge of the cell and the aft and forward upper edge of the cell to the structure.

b. Install packing (26, figure 7-4) on fuel drain fitting (25, or 69, detail B); align the fitting over the mounting holes and install three screws (22), one bolt (24) and washers (23). Secure drain valve in closed position and safety valve (20) to drilled bolt head (24) (helicopters 254 thru 660 and 672 thru 715) with 0.032 inch lockwire (item 19, table 1-1), connect hose (68) to drain (19, figure 7-4 , detail B).

c. Install a new packing (12) on each boost pump (3, 4). Position the boost pump (3) (with fuel hoses 2, 7, attached) in the aft hole and position hose (7) over the forward mounting hole. Hold the forward boost pump (4) in position and connect hose (7) to the forward pump mounted check valve (14). If check valve (14) was removed, install new packing (13). Align the pumps with the mounting holes and install bolts (5) and washers (6). Torque bolts (5) to 50 plus or minus 5 inch-pounds. Do not overtorque.

Note

Clean head of bolt (5) and surface of pump flange to ensure a good electrical bond surface, omit washer (6) and install boost pump ground wire.

d. Install the lower tank indicating unit (15) in fuel cell with the indicating arm forward. Install screws (16, 18) and washers (17).

e. Install packing on fill cap adapter (1) and install adapter over opening on right side of helicopter. Coordinate adapter with the fuel cell (30) and install eight screws and washers. Torque screws to 50 plus or minus 5 inch-pounds. Do not overtorque screws.

f. Install new packings (35) on fuel fittings (34, 46). Coordinate fittings with top of fuel cell and install screws (32) and washers (33). Connect fuel supply hose (2) to forward fitting, access to fuel hose is through the filler opening (1).

g. On helicopters 254 and subsequent (figure 7-4, detail A), position packing (67) on fitting (66) and install flange (63) on fitting; secure flange to fuel cell with screws (61) and washers (62). Through filler opening (1) connect hose (68) to bottom of fitting (66); install packing (65) and union (64) in top of fitting (66).

h. Install the upper tank indicating unit (27) in opening on deck aft of the passenger seat. Install unit with float to the right. Install screws (28) and washers (29) and make electrical connection. Install coverplate. Connect fuel lines (38, 48 and 52.) Check lower exposed portion of vent (52) for installation of hose (70). If hose or vent tube is to be replaced accomplish the following:

(1) Trim sealant from vent and hose at upper baggage compartment floor line and at external skin line. Remove clamps, and disconnect and remove vent and hose.

(2) Temporarily install vent with 45 degree scarf facing aft. (See figure 7-4, detail C.) Mark circumference of tube 0.12 inch above baggage compartment floor line and 0.12 inch below external skin line. Remove vent from helicopter.

(3) Cut hose to required length and ensure that ends of hose will be parallel to floor and external skin lines. If necessary reinstall to verify correct fit and that hose will protrude 0.12 inch at both areas.

(4) Install vent, hose, and clamps, and secure in their correct location. Seal vent and hose to baggage compartment floor line and external skin line with sealant (item 7, table 1-1).

i. Make electrical connections at the lower indicating unit (15) and boost pumps (3, 4) in accordance with master wiring diagram in Section XIII and step c. Note above.

j. Inspect fuel cell installation for security. Install access covers over the seat support and seatback. Install cushions.

k. Connect the battery and close fuel shut-off valve for leak test.

l. Perform leak test on fuel cell as follows:

(1) Disconnect fuel vent lines (52 and 48, figure 7-4) and remove tee (47) from fitting (46). Connect air source to fitting (46). On helicopters 254 and subsequent (detail A), disconnect lines (52 and 48), install a cap fitting on union (64) and connect air source to top of fitting (66).

Note

Use regulated low pressure, filtered, compressed air source, an accurate pressure gage and a shut-off valve.

(2) Apply pressure until gage indicates 1.0 psi. Shut-off air source. The cell should hold this pressure for 15 minutes.

CAUTION

Do not apply over the recommended pressure as damage to cell and structure may result. Use a mild soapsuds solution to locate leaks.

(3) Locate and correct any leakage indicated. Repeat test if leaks are found.

(4) Remove test equipment, install tee (47) into fitting (46) and connect tubes (48 and 52). On helicopters 254 and subsequent, remove cap from union (64) and connect tubes (48 and 52). Install access cover.

7-26. FUEL SHUT-OFF VALVE.

7-27. DESCRIPTION. A motor operated shut-off valve (31, figure 7-4), installed in the main fuel supply line, is located in the fuel compartment above the fuel filler cap. The valve is electrically controlled by an ON-OFF switch located on the instrument panel and protected by a circuit breaker located in the overhead console panel. In the event of electrical failure the valve will remain in the position selected before failure.

7-28. REMOVAL – SHUT-OFF VALVE.

a. Remove coverplate above the filler cap, pull circuit breaker and disconnect electrical connector on the valve.

b. Disconnect tubes (38, figure 7-4) and (56).

c. Disconnect pressure indicating tube from cross (42) and remove bolts (41) washers (40) and nuts (39), securing valve (43) to bracket (45).

7-29. INSTALLATION – SHUT-OFF VALVE.

a. Position cross (42), valve (43) and connector (44) on bracket (45), and install bolts (41), washers (40) and nuts (39).

b. Connect tube assemblies (38, 56) and electrical connector.

c. Install coverplate.

7-30. FUEL PUMP AND FILTER ASSEMBLY.

7-31. DESCRIPTION. The engine fuel pump and filter assembly are integral units mounted on the aft end of the engine. Fuel enters the engine fuel system at the inlet port of the pump and passes through the filter before entering the gear elements of the pump. Filter draining is accomplished by a drain valve (31, figure 7-2) (not a part of the basic engine), mounted on the filter housing. The fuel filter is monitored by a pressure differential switch (43) located on the lower firewall and connected electrically to the fuel filter caution light. Refer to Allison Operation and Maintenance Manual 5W2 for detailed maintenance instructions.

7-32. FUEL BOOST PUMP.

7-33. DESCRIPTION. Two electrically operated boost pumps (3, 4, figure 7-4) are located in the bottom of the fuel cell. The pumps are interconnected and furnish fuel through one supply line. The pumps are equipped with check valve, pump drain port, seal drain port, intake screen, and pump operating pressure switch located in the discharge port of the pump. The pumps are controlled by circuit breakers located in the overhead console. The fuel pump motor/impeller cartridge can be removed without removing the fuel boost pump assembly (Refer to paragraph 7-35B for replacement of motor/impeller cartridge.)

7-34. REMOVAL – FUEL (BOOST) PUMP.

WARNING

All defueling operations should be performed in an area where fire hazards are reduced to a minimum. Observe all warning and caution statements of paragraph 7-21.

a. Disconnect battery and defuel helicopter with a 1.5 degree nose down attitude.

b. Disconnect electrical wiring to front or rear fuel pumps (3 or 4, figure 7-4). (Refer to Section XIII .)

c. Remove eight bolts (5, figure 7-4) with seven washers (6) and ground lead from fuel pump.

d. Lower fuel pump (3 or 4) and disconnect attached fuel supply hose (2) or interconnect hose (7), as applicable, and remove fuel pump.

e. Cover fuel cell opening to prevent entrance of foreign material.

f. Remove check valve (14), plug (10), and pressure switch (8). Discard all packings (9, 11, 12 and 13).

7-35. INSTALLATION FUEL (BOOST) PUMP.

a. Prior to installation of rear or front fuel pumps (3 or 4, figure 7-4) modify each fuel pump not previously modified in accordance with figure 7-4A, as applicable for fuel pump part number. Modification of fuel pumps in accordance with figure 7-4A will improve fuel pump performance and prevent ice clogging of fuel pump inlet screen(s) when fuel anti-icing additives are not used.

b. Lubricate packings (9, 11, 12 and 13) with fuel.

c. Position packing (13) on check valve (14) and install. Torque check valve (14) to a maximum of 40 inch-pounds.

d. Remove protective covering from fuel cell openings.

e. Position a new gasket (12) on rear fuel pump (3) and install in fuel cell opening. Connect tee fitting, fuel supply hose (2) and interconnect hose (7) to rear fuel pump. Secure fuel pump with eight bolts (5) and seven washers (6). Torque bolts (5) to 45 to 55 inch-pounds.

Note

Bolt heads and external flange of fuel pumps shall be clean to provide a good electrical bond. Omit one washer and install fuel pump ground wire.

f. Position a new gasket (12) on front fuel pump (4) and install in fuel cell opening. Connect interconnect hose (7) to check valve (14) on front fuel pump. Secure fuel pump with eight bolts (5) and washers (6). Torque bolts (5) to 45 to 55 inch-pounds. Observe preceding note.

g. Install plug (10) and pressure switch (8) in Globe and Lear Siegler fuel pumps as follows:

(1) Globe boost pumps. These pumps contain one external fuel drain port in the mounting flange. When installing a Globe pump, plug external fuel drain port with a new packing (11) and plug (10).

(2) Lear Siegler boost pump. These pumps contain two external ports in the mounting flange. When installing a Lear Siegler pump, plug the fuel drain port with a new packing (11) and plug (10).

Note

No plug is required in Lear Siegler fuel pumps at seal drain port.

(3) Install pressure switch (8) with a new packing (9). Torque pressure switch to 40 inch-pounds.

h. Connect electrical wiring to front and rear fuel pumps (3 and 4). (Refer to Section XIII .)

i. Inspect installation for security.

j. Connect the battery and close fuel shut-off valve.

k. Perform leak test on fuel cell. (Refer to paragraph 7-25 1.)

l. Bleed trapped air from both boost pumps after refueling by removing drain plug and draining a small amount of fuel from cell.

m. Safety plug (10) and pressure switch (8) together and the two screws securing pump to housing with 0.032 inch lockwire (item 19). (See figure 7-4 , view D-D.)

n. Check boost pump for minimum pressure as follows:

(1) Move helicopter to adequate tie-down facilities and secure for ground run.

(2) Operate helicopter at flat pitch and 100 percent rotor speed, with generator ON.

(3) Check each individual pump with the other inoperative. Pump pressure shall be 8 psi minimum.

Note

Fuel pressure with both pumps in operation is not significant as long as each pump by itself meets requirements in step (3) above.

7-35A. FUEL PUMP CARTRIDGE.

7-35B. REPLACEMENT — FUEL PUMP CARTRIDGE.

a. Disconnect battery and/or external power supply.

b. Drain fuel from cell.

c. Disconnect electrical wiring to front or rear fuel pump (3 or 4, figure 7-4). (Refer to Section XIII .)

d. Remove drain plug (10) and packing (11).

e. Remove retaining ring.

f. Install slide hammer with 0.3125-24 threads in pump drain boss and remove motor/impeller cartridge.

g. Clean cartridge hole and retaining ring.

h. Lubricate packing on motor/impeller cartridge and the sides of the cartridge hole in the mounting flange casting with lubricating oil (item 20).

i. Install slide hammer in pump drain part of new motor/impeller cartridge.

Note

Align arrows on motor/impeller cartridge and on mounting flange.

j. Install motor/impeller cartridge (by hand) in flange with arrows aligned, marking sure that it is properly seated and that the retaining ring groove is not obstructed.

CAUTION

Do not force. Eccentric cartridge design requires alignment arrows to be within plus or minus 3 degrees to be properly installed.

k. Remove slide hammer and install retaining ring.

l. Install drain plug (10), packing (11), and secure with 0.032 inch lockwire (item 19) as shown in view D-D.

m. Connect electrical leads to the motor/impeller cartridge.

CAUTION

Do not overtorque positive (+) lead terminal.

n. Partially fill fuel cell and check for external leaks.

o. Connect battery and/or external power and turn fuel pump ON and check for proper gage pressure. (Refer to paragraph 7-25 .)

7-36. FUEL QUANTITY – INDICATING UNITS.

7-37. DESCRIPTION. Two float type fuel level transmitting units (15, 27, figure 7-4) are installed in the fuel cell. The lower unit is mounted in the tank bottom and monitors fuel level up to the horizontal surface of the cell, under the seat; the upper unit monitors fuel level in the upper section of the fuel cell. Both indicating units are connected to a common quantity indicator. Refer to Section X for calibration procedures and trouble shooting.

7-38. REMOVAL – INDICATING UNITS. (Refer to paragraph 7-21)

7-39. INSTALLATION – INDICATING UNITS. (Refer to paragraph 7-25.)

7-40. ENGINE OIL SYSTEM.

7-41. DESCRIPTION. The engine oil system is a dry sump type with an external mounted supply tank and oil cooler located on the top aft section of the fuselage. (See figures 7-6 and 7-7.) Oil is supplied by the tank to a gear type pressure and scavenge pump mounted within the accessory drive gearbox. Return oil is routed from the engine oil outlet port to the oil cooler and from the cooler to the tank. The oil tank has a normal capacity of 1.5 U.S. Gallons and oil level is checked by a dip stick mounted on the filler cap. The tank provides port openings for engine supply, engine return, vent, oil temperature bulb, oil level sight gage, and self-locking drain valve. Air is supplied to the oil cooler by a blower mounted on the tail rotor drive shaft. Refer to Operation and Maintenance Manual, Allison Publication No. 5W2 for description and maintenance of engine lubrication system.

7-42. REMOVAL – OIL TANK.

a. Remove aft fairing.

b. Open drain valve (10, figure 7-6) by pushing upward on hose (12) and drain oil into a suitable container.

c. Disconnect electrical connection at temperature bulb (8). Remove bulb and packing.

d. Disconnect tube assemblies and drain hoses.

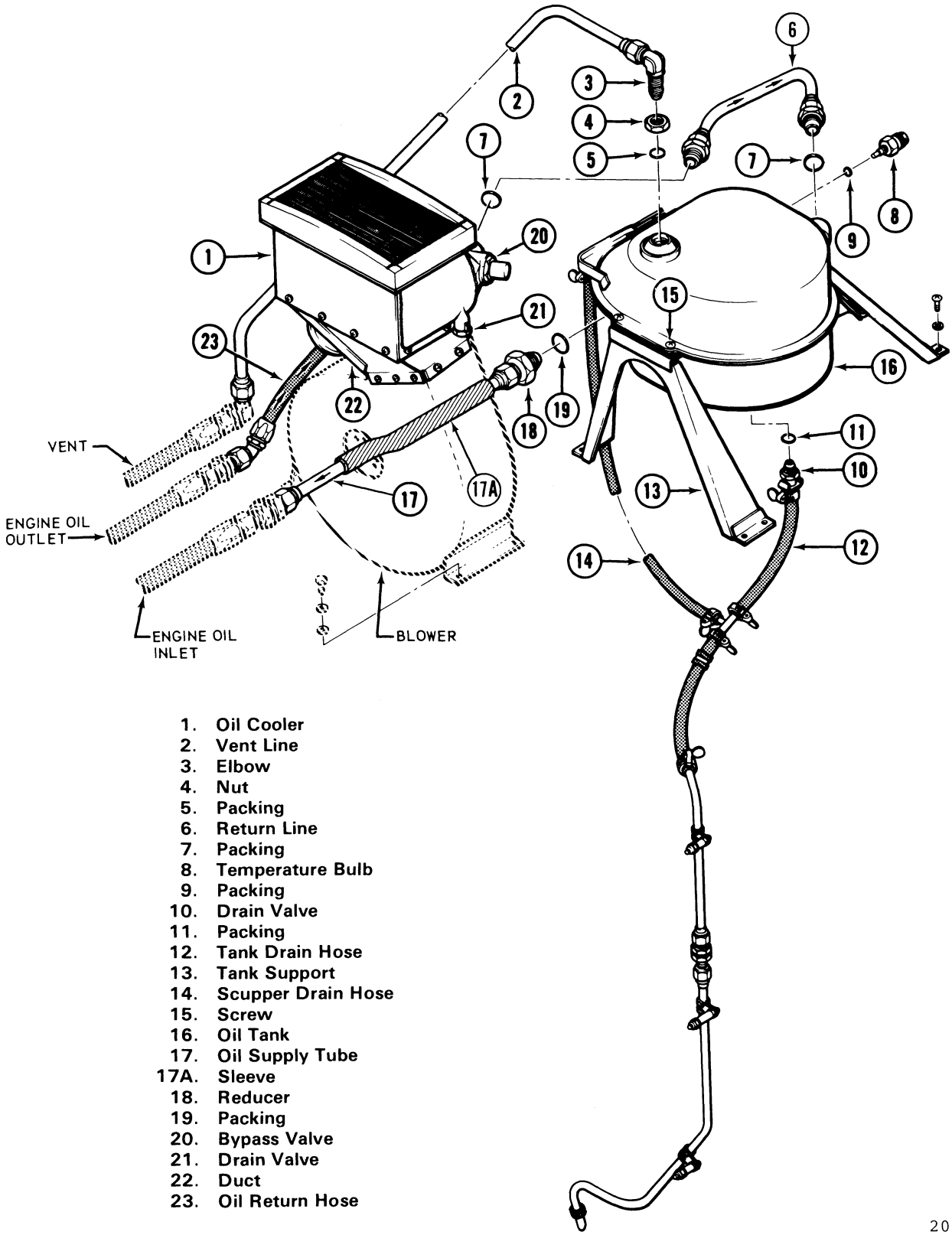

1. Oil Cooler
2. Vent Line
3. Elbow
4. Nut
5. Packing
6. Return Line
7. Packing
8. Temperature Bulb
9. Packing
10. Drain Valve
11. Packing
12. Tank Drain Hose
13. Tank Support
14. Scupper Drain Hose
15. Screw
16. Oil Tank
17. Oil Supply Tube
17A. Sleeve
18. Reducer
19. Packing
20. Bypass Valve
21. Drain Valve
22. Duct
23. Oil Return Hose

Figure 7-6. Engine Oil Supply System

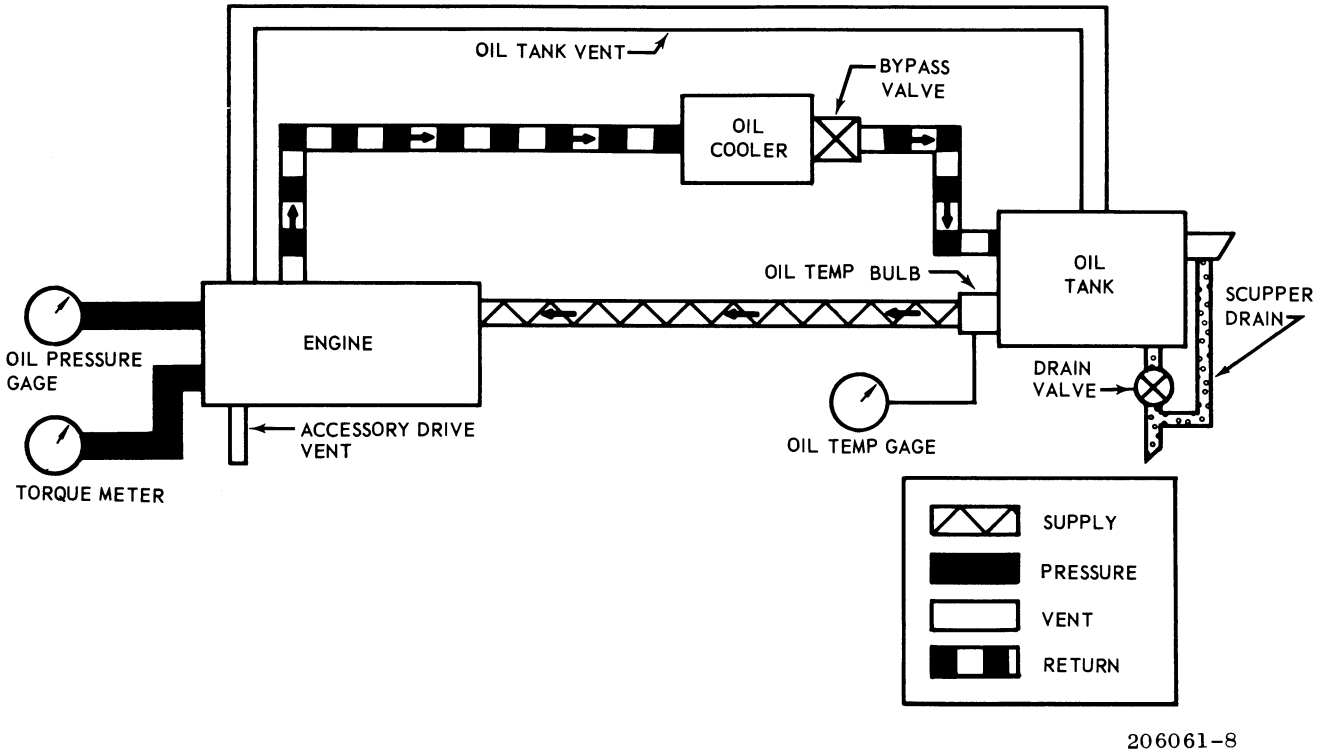

Figure 7-7. Engine Oil Supply System Schematic

e. Remove drain valve (10).

f. Remove screws (15), washers and nuts securing tank (16) to support (13).

7-43. INSTALLATION – OIL TANK. (Figure 7-6.)

a. Install rubber pads on top of tank support (13). Position mounting flanges of tank (16) over rubber pads and install screws (15), washers and nuts.

CAUTION

Do not overtorque fittings and line B nuts.

b. Install new packing (11) on drain valve (10) (if valve was removed), and install valve in tank (16). Connect drain hoses (12) and (14).

c. Connect vent line (2, oil supply line (17), sleeve (17A) and return line (6) to tank (16).

d. Install new packing (9) on temperature bulb (8). Install temperature bulb in tank and connect electrical lead to bulb.

e. Install hose (12).

f. Check drain valve (10) for closed position and fill oil tank (16) per servicing schedule in Section I. Ensure proper amount and grade of oil is used.

7-44. REMOVAL – OIL COOLER. (Figure 7-6.)

a. Cut safety wire on drain plug (21), remove plug and drain cooler into a suitable container.

b. Remove engine return hose (23) and tank return tube (6).

c. Remove screws, bolts and washers attaching cooler (1) to blower duct (22).

CAUTION

If internal engine failure or metal contamination has occurred which might contaminate cooler, remove and install new cooler after flushing connecting lines, fittings and oil tank.

7-45. REPAIR – OIL COOLER.

CAUTION

A damaged or contaminated oil cooler cannot be cleaned or repaired. It must be replaced with a new cooler.

7-46. FUNCTIONAL TEST – OIL COOLER BY-PASS VALVE.

a. Check function of control valve by submerging valve in water heated to 160°F (71°C) for five minutes. Remove valve and measure length. Submerge valve in water heated to 178°F (81°C) for five minutes. Remove valve and measure length. Minimum increased length allowed is 0.080 inches.

Note

Start to Close temperatures are approximate.

VALVE P/N	TEMP. RANGE Start to Close	Fully Closed	MINIMUM TRAVEL INCHES
8327855	160°F (71°C)	178°F (81°C)	0.080

b. 0.080 inches of travel should occur between the two temperatures shown.

c. If valve under test does not function properly, replace with new valve.

7-47. INSTALLATION – OIL COOLER.

a. Install reducer and new packing in the inlet and outlet ports of cooler.

b. Position cooler (1, figure 7-6) on blower duct (22) with inlet fitting on right side. Align mounting holes and install screws, bolts and washers.

c. Connect engine oil return hose (23) to reducer on inlet port. Connect return line (6) from oil tank to reducer on cooler outlet port.

d. Replace drain valve (21) and bypass valve (20) with new packing and safety with 0.032 inch lockwire (item 19, table 1-1).

e. Seal corners of blower duct (22) with sealant (item 7, table 1-1) or equivalent.

7-48. ENGINE CONTROLS.

7-49. DESCRIPTION. Control of engine power requirements is provided by the collective pitch lever, which is connected by flexible cables to control levers located on the gas producer fuel control and the power turbine governor. (See Figure 7-8.) The twist grip, mounted on the end of the collective pitch lever, controls the position of the gas producer fuel control lever which has three basic positions: cutoff, ground idle and full open. The power turbine governor lever is connected by linkage to the collective pitch control system. Movement of the collective pitch lever results in a repositioning of the governor lever. This action provides droop compensation to prevent rpm variations as power changes are made. The power turbine governor control system incorporates a linear actuator, which is controlled electrically by a GOVernor RPM INCRease-DECRease switch mounted on the collective pitch lever. Refer to Operation and Maintenance Manual, Allison Publication No. 5W2 for description and operation of engine fuel control system.

Note

If a replacement engine is installed, the engine furnished control levers shall be removed and replaced with power turbine governor lever (206-061-107-3) and fuel control lever (206-061-716).

7-50. RIGGING – GAS PRODUCER CONTROL (N_1).

a. Connect the control cable rod end to throttle arm located at the end of the collective pitch lever. The rod end for the pilot's control cable is placed on the outside of the clevis as shown. (See Figure 7-9 , View B-B.) Spacer (NAS43DD3-16), must be inserted between the clevis whenever dual controls are not installed.

b. Rotate the twist grip to full clockwise position and return counterclockwise to flight idle detent position. Maintain the twist grip in the flight idle position during accomplishment of subparagraphs c. and d.

Note

During rigging, if full travel cannot be obtained, (controlex) cable may be repositioned at bracket (7, figure 7-9) at firewall or at clamps.

c. Position bellcrank (2) as illustrated in Figure 7-9 and connect tube (1) to bellcrank at upper hole. Helicopters 414 thru 508 do not have upper hole drilled in bellcrank. This must be done in accordance with Bell Service Letter No. 206A-157 before proceeding. If tube (1) requires adjustment, back off jam nut and adjust clevis end of tube. Use wrench to hold end of controlex tube when loosening or tightening jam nut. Install pin, washer and cotter pin connecting tube (1) to bellcrank. Recheck position of twist grip to assure grip is against idle detent stop, then recheck position of bellcrank (2).

d. Set lever (5) at 30° position on quadrant (6), install lever (4) and position as illustrated in Figure 7-9 . Install

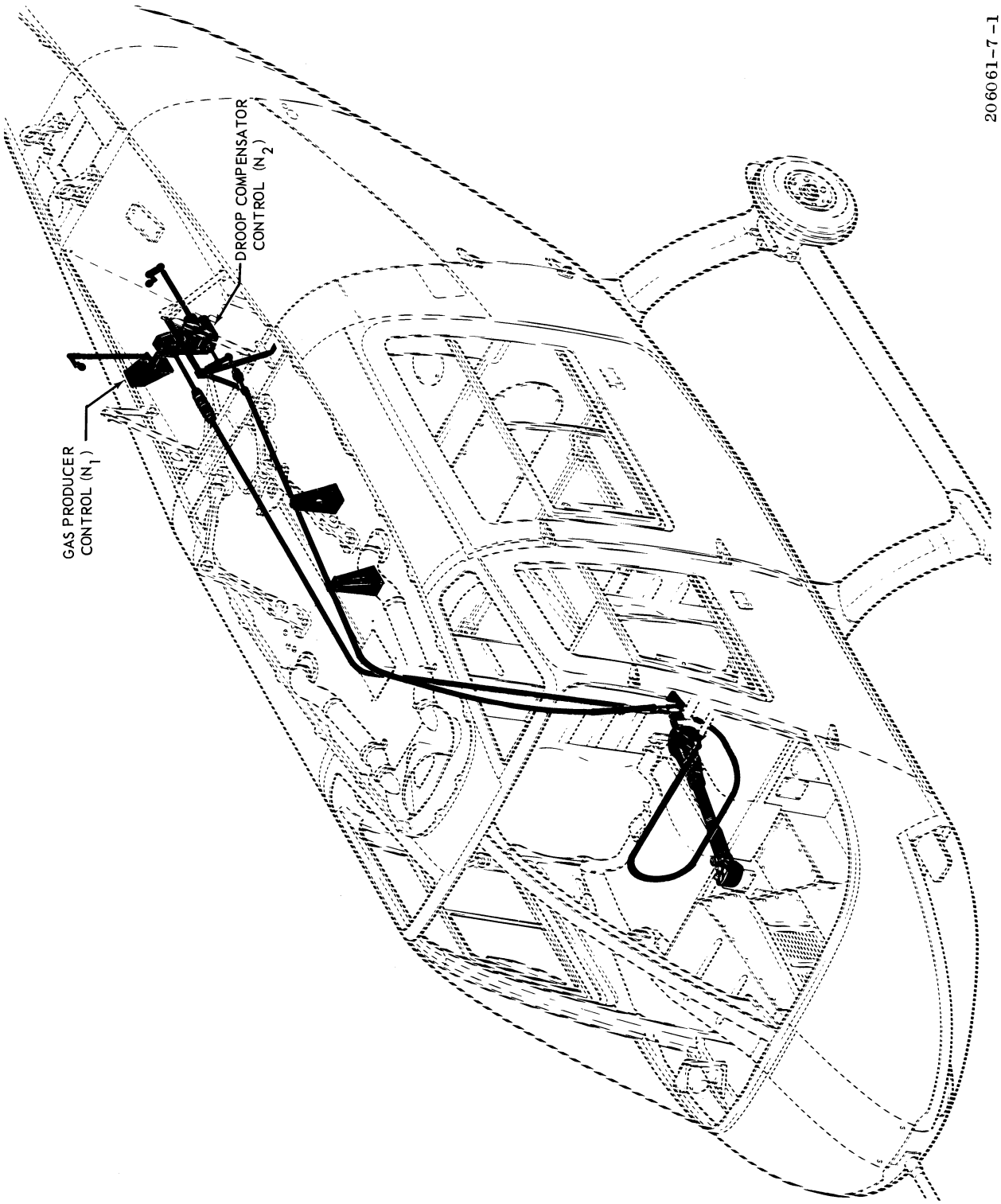

Figure 7-8. Engine Control Installation

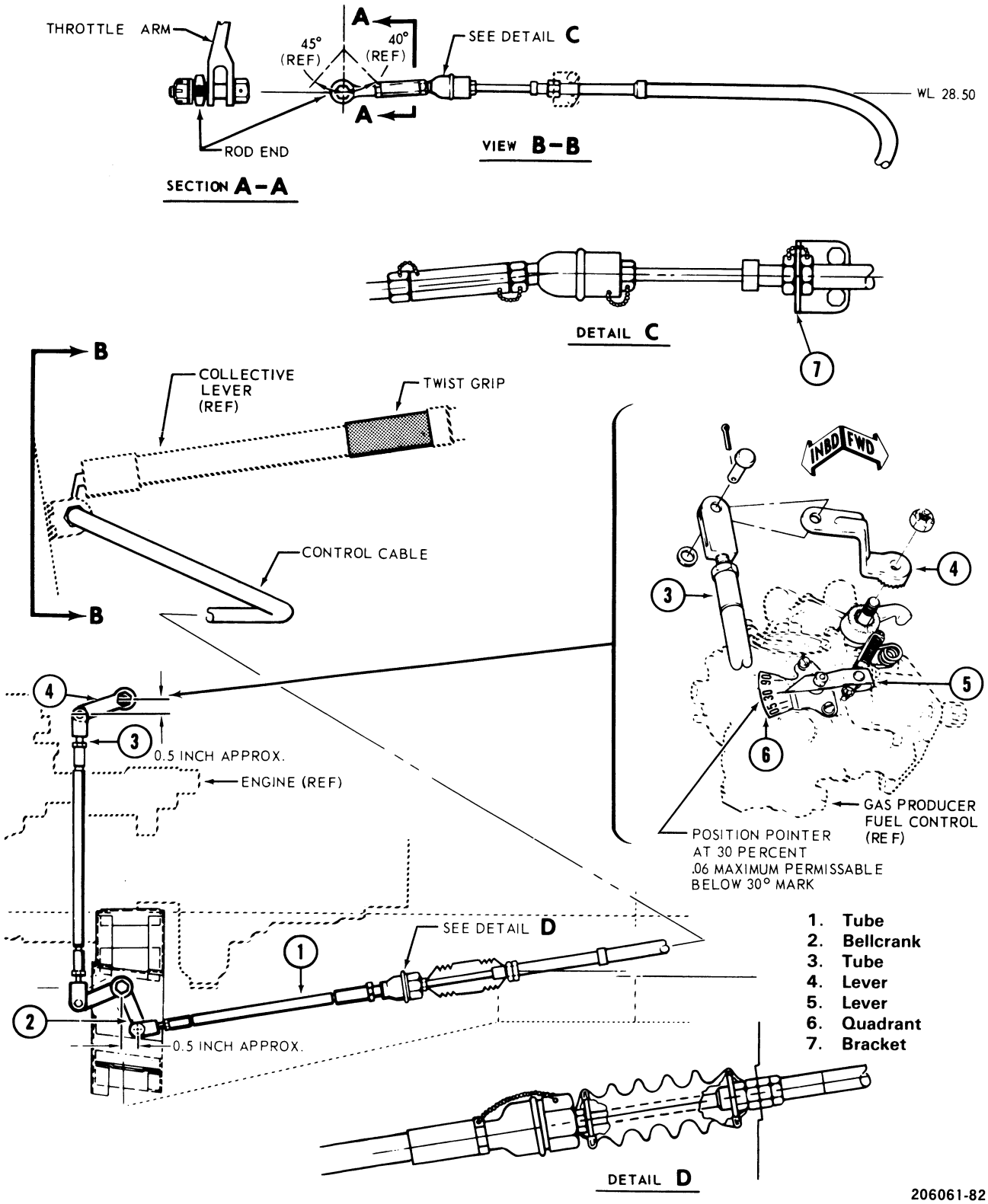

Figure 7-9. Rigging Gas Producer (N_1) Control – 250-C18 Engine

nut on lever and torque 40 to 50 inch-pounds. Adjust tube (3) to correct length and connect to lever (4) with pin, washer and cotter pin.

Note

If bolts are used to connect tube (3, figure 7-9 to lever (4), tube (3) to bellcrank (2) and tube (1) to bellcrank (2), install bolts with washer under nut; tighten nut finger tight; tighten to next castellation and install cotter pin.

e. Rotate twist grip to the left (full power position). Check the fuel control to ensure that the throttle stop arm contacts the maximum stop screw on the fuel control. Rotate the twist grip to right past flight idle position to throttle closed position. Check low stop screw on fuel control for contact. Recheck to assure that pointer on fuel control is set at 30° with twist grip at idle detent. After rigging is complete, check control system (N1) for security. (See Figure 7-9 , detail C and D, for lockwire application.)

f. Check system for smoothness by turning pilot's twist grip. If twist grip forces are considered to be objectionable to the pilot, the following twist grip torque values may be used as a guideline. Torque required to rotate pilot's twist grip should not exceed 25 inch-pounds break away from the full closed position. From the initial break away force a maximum of 15 inch-pounds is normal to the flight idle position. After passing flight idle position, torque should not exceed 10 inch-pounds throughout range to full open position. The operation shall be smooth through the entire range. If forces exceed 25 inch-pounds, check throttle cable under crew seat for sharp bends or improper clamping.

CAUTION

In subparagraph g, do not follow the customary practice of opening twist grip past idle detent then moving the twist grip back to the detent.

g. With engine off, turn pilot's twist grip to the full open position, then turn grip slowly back to the idle detent position. Observe position of pointer on fuel control and mark to indicate position. The pointer must be observed with the eye level even with the pointer. Failure to do this will result in an error in the pointer position.

Note

If pointer is in any position but 30° on the indicator quadrant, rerigging may be required.

Turn pilot twist grip to the shut-off position, then slowly turn twist grip toward the flight idle position. When idle detent button pops out, stop turning twist grip and observe position of pointer on the indicator quadrant.

Note

Construction of the idle detent button may allow the button to partially pop out. Continue turning twist grip open until button pops out all the way.

h. Mark the quadrant. Measure the distance between the marks accurately. The distance is an indication of the looseness in the portion of the control system from the pilot's twist grip to the fuel control lever. Maximum distance between the marks is 5/64 inch. Repeat the check to verify the marks.

i. If the distance exceeds 5/64 inch, the control system must be inspected more thoroughly and corrective action taken. Inspect the control system in detail as follows: (See figure 7-9 .

j. Inspect lever (4), clevises on tube (3), bellcrank (2), tube (1) and all pins or bolts connecting them for wear. Replace all worn parts.

k. Repeat subparagraphs above to determine if looseness is within limits. If looseness exceeds the 5/64 inch limit on the indicator quadrant, remove pilot's seat to inspect control cable, rod end, pin, twist grip lever and supporting clamps for wear or looseness which will result in lost motion in the control system. Replace parts which are worn excessivley. Also inspect cable for freedom of operation — check to be sure that cable is routed so it does not take sharp bends. If dual controls are installed, remove copilot's seat also and inspect for wear in the N1 control system. Replace excessively worn parts.

l. Repeat subparagraphs above for the copilot's twist grip to ensure the following:

(1) In subparagraph k. ensure that the pointer is at 30° or no more than 5/64 inch below the 30° mark. If not, recheck the rigging.

(2) Lever on fuel control firmly contacts maximum and minimum stop screws on the fuel control.

m. Rig power turbine governor (N2) controls. (See paragraph 7-51) Perform the following checks and adjustments.

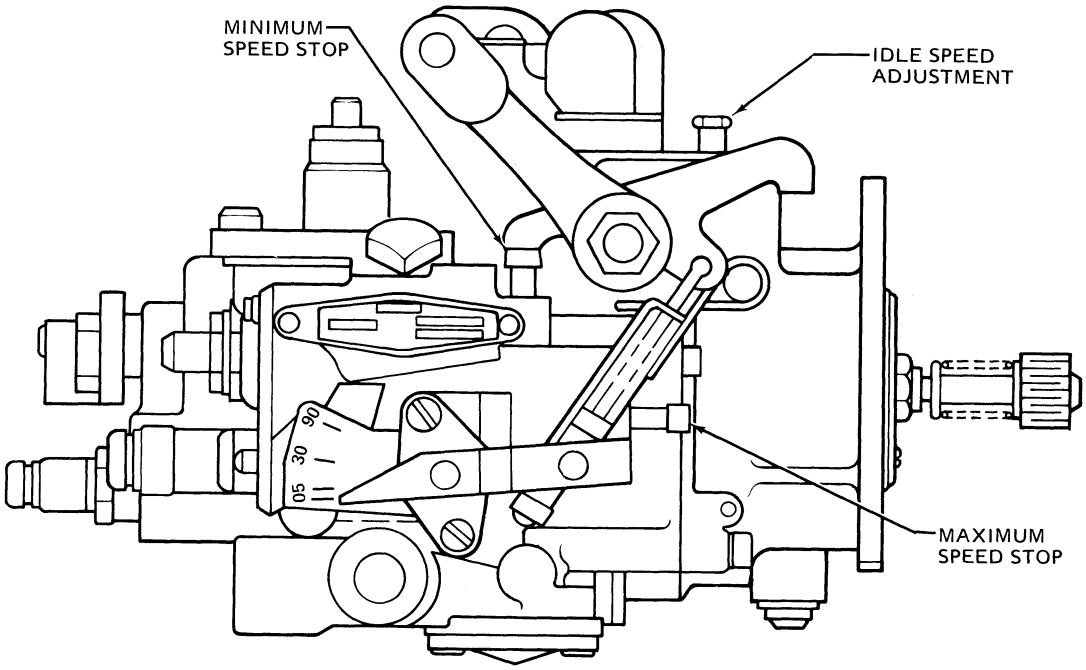

RIGHT SIDE VIEW
(AS INSTALLED)

Figure 7-10. Bendix Gas Producer Fuel Control Adjustments

Note

The 64% N1 speed (starting point) will vary when complying with autorotation rpm requirements in Chapter 2 .

n. Start engine and allow to run at a minimum idle speed for a minimum of 5 minutes to stabilize temperatures in engine. Increase twist grip to provide 100% N2 with collective in flat pitch, then decrease twist grip to flight idle detent. Gas producer (N1) speed should be 64% with generator switch "OFF". Adjust idle speed adjusting screw if necessary, to obtain 64% N1 idle speed. (See figure 7-10.) Allison special wrench (67989292) should be used to idle adjustment.

CAUTION

Never attempt to adjust N_1 idle speed by adjusting rod. (See figure 7-9 item 3.) Pointer must be at 30° or within the specified limits. N_1 idle speed must be adjusted by the idle speed adjusting screw only. (See figure 7-10) Failure to comply with this warning can result in an engine flameout.

o. Check idle speed setting with generator turned off. Checking and setting idle speed is very important. When rolling the twist grip to the idle position slowly or snapping it to idle position, the stabilized idle rpm should repeat every time. Failure to repeat indicates that the rigging is not adjusted properly. The rigging of the linkage must provide sufficient control to accurately position at the idle stop location (30°) on the fuel control.

p. In addition, check for proper idle adjustment rigging by slowly rolling off twist grip to idle and let N_1 rpm stabilize. Then release the idle detent on the twist grip and very slowly roll twist grip 3° to 4° (approximately 1/16 inch) toward cut-off, if the idle rpm tends to go to a lower N_1 idle, this indicates that the fuel control rigging is incorrect. If no change is encountered, very slowly roll twist grip from normal idle detent position 3° to 4° (approximately 1/16 inch) toward full power; no increase in rpm is permitted before the pointer on the fuel control indicates greater than 30°

q. If looseness still exists which would cause the pointer to exceed the tolerance on the fuel control indicator quadrant of 30° to 5/64 inches below the 30° mark, it may be possible that the pointer may be adjusted to a position above the 30° mark. Extreme caution must be exercised when making this adjustment particularly with the earlier (pre-Blue Ribbon) fuel controls. Determine if this final adjustment can be made by increasing the twist

grip 3° to 4° (1/16 inch) from the idle detent position. If the engine N_1 speed increased as the grip was increased 3° to 4° (1/16 inch) this adjustment can NOT be made. If the engine DID NOT increase N_1 speed beyond 62% to 63%, make adjustment as follows:

(1) Lengthen clevis on tube (3, figure 7-9) two turns. This should move pointer above the 30° mark.

(2) Start engine. After warm-up open twist grip to increase N_2 speed to 100% with collective stick down. Now turn twist grip to idle detent. With generator off, N_1 speed should be the same as before adjustment was made (62% to 63%). If speed has increased, return clevis, (3, figure 7-9) to its original position and replace worn airframe control parts.

(3) If N_1 speed did not increase as a result of adjusting rod in previous step, recheck limits of pointer to 30° or within 5/64 limit. (See figure 7-9.)

r. If the fuel control can not be rigged in accordance with the above instructions, refer to Allison 250CEB-27 and Allison 250CSL-53 for further instructions.

CAUTION

If these adjustments do not correct the condition, contact your Allison distributor.

7-51. RIGGING – DROOP COMPENSATOR CONTROL (N_2).

Note

Rig collective system before rigging power turbine governor controls. (Refer to Section IV.)

a. Disconnect cable end (5, figure 7-11) from bellcrank (8). Move the collective pitch lever and check control cable (4) for security and freedom from twisting and binding. Inspect shear rivet (18) for security, replace if loose. (See figure 7-11 , for lockwire application.)

b. Lock collective stick in the full up position. Adjust either or both ends of cable (4) to obtain 3.8 to 4.1 inches between firewall (16) and center of hole in end fitting (5).

c. Connect end fittings (5) in the bottom hole of bellcrank (8) and secure with bolt, washers and nut. Tighten nut finger tight and install cotter pin.

d. Position actuator end fitting (6) to bellcrank (8), 0.06 to 0.18 inch from bottom of slot. Position the two serrated adjustment plates (7) and install bolt, washers and nut. Tighten nut finger tight and install cotter pin.

Note

New actuators will require stroke range adjustment (step e. below), if the actuator was not replaced, proceed to step f.

e. Adjust actuator stroke range as follows:

(1) Connect actuator to 28 volt DC power source.

(2) Actuator with two adjusting screws.

CAUTION

Stroke length shall be equally divided on each side of the midpoint setting.

(a) Set actuator stroke by turning both adjusting screws (9) to obtain maximum stroke travel. Reduce stroke to normal setting (1.0 inch) by turning both adjusting screws the same number of turns from maximum adjustment. Actuator length, after adjustment should be 13.30 minimum to 14.30 maximum inches between centerline of end fitting (6) and end of actuator shaft. (See figure 7-11 .)

(b) After actuator stroke length is established, operate actuator through a complete cycle and recheck dimensions.

(3) Actuator with one adjusting screw.

(a) Set actuator stroke by turning adjusting screw (9) to the right and obtain maximum stroke travel, turn left and reduce stroke to 1.0 inch. Actuator length, after adjustment, should be 12.80 minimum to 13.80 maximum inches between centerline of end fitting (6) and end of actuator shaft. (See figure 7-11 .)

Note

When the Barber-Coleman single screw actuator SYLC-9548 is installed, a 1.0 inch total stroke is required.

(b) After actuator length is established, operate actuator through a complete cycle and recheck dimensions.

f. Basic rigging droop compensator control.

(1) Adjust screw (12) in head of bolt (17) until 0.06 inch maximum threads are exposed on upper side of bolt. Safety wire screw.

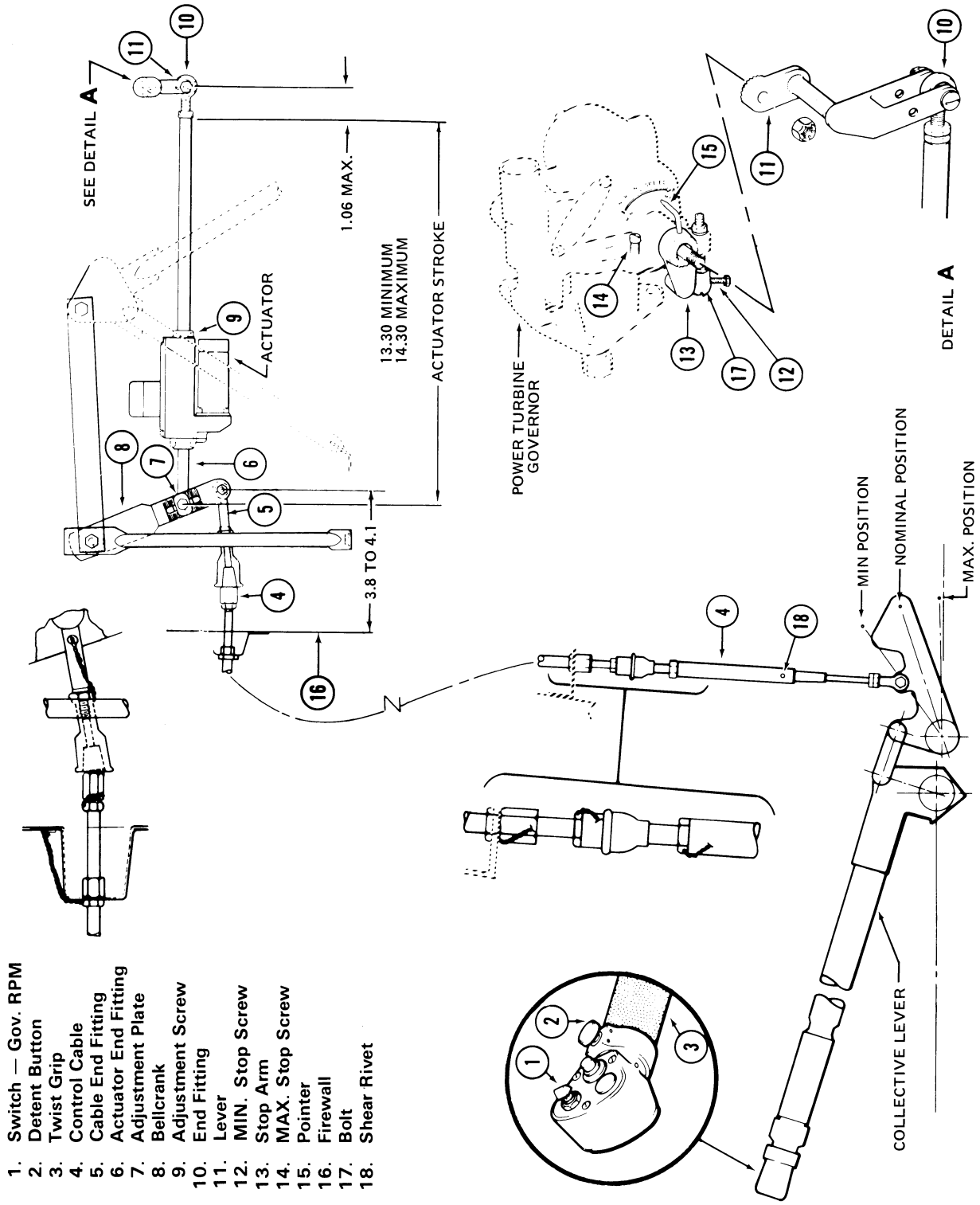

1. Switch — Gov. RPM
2. Detent Button
3. Twist Grip
4. Control Cable
5. Cable End Fitting
6. Actuator End Fitting
7. Adjustment Plate
8. Bellcrank
9. Adjustment Screw
10. End Fitting
11. Lever
12. MIN. Stop Screw
13. Stop Arm
14. MAX. Stop Screw
15. Pointer
16. Firewall
17. Bolt
18. Shear Rivet

Figure 7-11. Rigging Droop Compensator (N_2) Control — 250-C18 Engine

Note

The governor lever stop screw (14) should be backed out, the governor rigged to obtain the 95 to 100 per cent (N2) RPM requirement, and the screw returned to within 0.010 inch of the governor lever in the maximum collective full "beep" position.

(2) On helicopters, equipped with early model linear actuators (544086-2-1), adjust as follows:

(a) Set stop arm (13) with stop 0.17 inch from maximum stop screw (14).

(b) Secure end fitting (10) on outboard hole of lever (11) with bolt, two washers and nut (do not install cotter pin until rigging is complete).

(c) Check collective lever for full up position and "beep" actuator to full rpm INCRease. (Actuator arm will be fully retracted.)

CAUTION

Do not exceed 1.06 inches maximum adjustment at end fitting (10). (See figure 7-11 .)

(3) On helicopters equipped with linear actuator (SYLC9548), adjust as follows:

(a) Install lever (11) approximately 90 degrees to stop arm (13) and pointer (15) as close as the serrations on lever (11) and adjustment of end fitting (10) will permit. Total travel of lever (11) to be equal either side of a vertical line. (See figure 7-11 .) Torque lever (11) retaining nut to 40 to 50 inch-pounds.

(b) Tighten nut at end fitting (10) and lever (11) finger tight and install cotter pin.

g. Final rigging of droop compensator controls.

Note

Final rigging is accomplished after the initial ground run. Move the helicopter to adequate tie-down facilities. If tie-down facilities are not available, final adjustments may be made following flight power checks.

(1) Start engine with collective full down and "beep" switch (1) in full DECRease. (Actuator arm will be fully extended.) Check for minimum 95 percent N2.

(2) With collective full down and "beep" switch (1) in full INCRease. (Actuator arm will be fully retracted.) Check for maximum 100 percent N2.

Note

To obtain N2 speed selection range of 95 percent to 100 percent N2, adjust actuator end fitting (10), lever (11), or screws (9).

Note

To obtain or correct droop compensation, the rate can be changed by repositioning the serrated adjustment plates (7) and/or relocating the rod end fitting (5) to another position on one of the three holes in bellcrank (8) and/or repositioning end fitting (10) to inboard hole of lever (11).

Note

The N2 governor should maintain any selected N2 speed throughout the collective system travel. Refer to 206A Flight Manual as applicable for N2 limits.

(3) After the 95 to 100 percent N2 speed range is established and rigging is complete, position the collective lever in full down and beep switch (1) in full RPM DECRease (actuator arm full extended). Adjust bolt (17) and minimum stop screw (12) to provide 0.010 inch clearance to the governor stop arm (13). Install lockwasher and nut on bolt (17) and safety screws (12) with 0.032 inch lockwire (item 19, table 1-1).

(4) Check flight idle for 62.5 RPM percent (32,000 RPM). If adjustment is required, refer to paragraph 7-50 , subparagraph n.

(5) After final adjustments are complete, recheck droop compensator system for installation of lockwire, cotter pins security of jam nuts.

Note

Following engine installation, check for torsional stability. (Refer to paragraph 7-3 ,b.)

Section VII

Part 2
Power Plant (250-C20)

7-52. POWER PLANT.

7-53. DESCRIPTION. The model 250-C20 turboshaft engine manufactured by the Allison Divison of General Motors is an internal combustion gas turbine engine consisting of an axial-centrifugal-flow compressor, a single combustion chamber, a two-stage gas producer turbine and a two-stage power turbine. The accessory gearbox incorporates the main power and accessory drive gear trains and the gear case serves as the structural support of the engine. The engine incorporates either a pneumatic or a hydraulic fuel control system, and is horizontally mounted aft and above the fuselage and is supported by bi-pod mounts to the service deck. Fuel for engine operation is supplied by a single bladder type fuel cell and lubricating oil is supplied by an external reservoir. Refer to Operation and Maintenance Manual, Allison Publication No. 10W2 for detailed description of basic engine, components and specifications. (See Figure 7-12 .) The model 250-C20 turboshaft engine is installed on helicopters 661 through 671 and 716 through 2211.

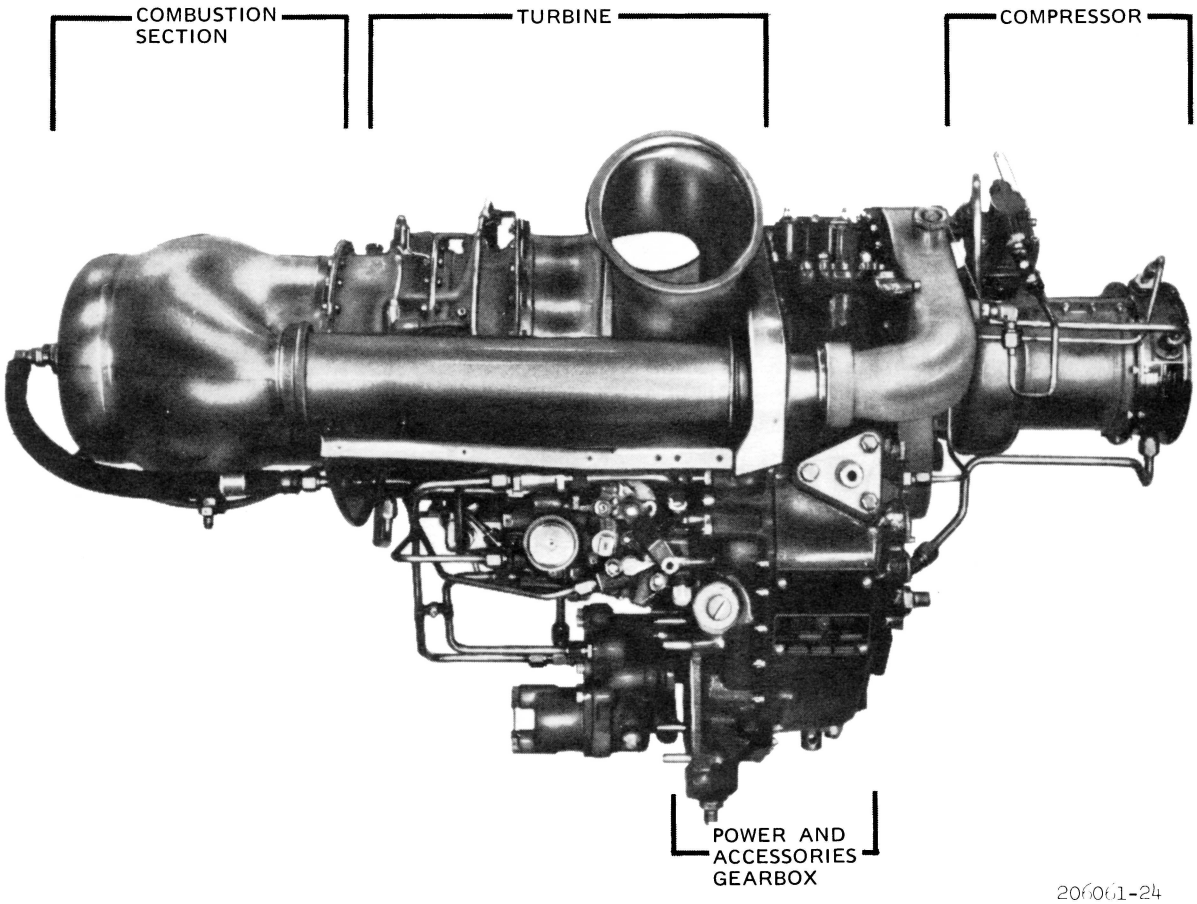

Figure 7-12. Engine Major Components — Model 250-C20

7-54. TROUBLESHOOTING ENGINE. Refer to Operation and Maintenance Manual, Allison Publication No. 10W5.

7-54A. COMPRESSOR WASH.

The compressor wash system consists of a spray fitting, tube assembly, cap assembly, and fittings and bracket mounted on the screen floor of the induction screen. The spray fitting is directed to the centerline of the engine bellmouth and provides a means of washing the engine compressor without removing all the fairings and cowling. (Refer to Operation and Maintenance Manual, Allison Publication 10W2 for instructions and materials needed for compressor wash.

a. Disconnect main ECU bleed air line, control line, and cap at BL R 13.12, WL 79.00, Station 119.00, if installed.

b. After engine wash, remove caps and reconnect main ECU bleed air line and control line.

7-55. ENGINE CHANGE.

7-56. REMOVAL – ENGINE ASSEMBLY. Remove the engine as a quick-change unit, with adapting parts attached to the engine. Disconnect all fuel and oil lines at firewall connections. If a replacement engine is to be installed, reduce the removed engine to a basic configuration and use the removed parts to build up the replacement engine (Refer to Engine Build-Up paragraph). Cap-off openings to preclude entry of foreign material and remove parts in any practical order, using the following steps as a guide. Consult Allison Operation and Maintenance Manual 10W2, for detailed information on the basic engine.

a. Disconnect battery.

b. Raise engine cowl panels and remove clamps (1, figure 7-13) from exhaust stacks (2). Remove stacks and install covers on engine exhaust ports. Remove vent hose (figure 7-13, detail C) if installed on exhaust stack.

c. Remove engine cowling. (Refer to Section VIII.)

CAUTION

Starter-generator must be supported when mounting clamp is loosened. Failure to support starter-generator can result in premature failure of shaft.

d. Disconnect the following electrical connections: temperature indicating harness, anti-ice control actuator, governor actuator, power turbine tachometer, gas producer tachometer, and ignition exciter. Remove clamps that secure electrical cables to engine. Remove clamp securing starter generator to engine. Remove starter-generator and place on lower firewall.

e. Remove the engine to transmission drive shaft and disconnect the tail rotor drive shaft and remove. (Refer to Section VI.)

f. Drain engine oil tank and oil cooler. Disconnect the engine oil inlet (3, figure 7-13), outlet (4) and vent hoses (5) at the aft firewall. Disconnect clamps (6, 7) securing oil hoses to engine and mount leg. (See Detail A.)

g. Disconnect the accessory drive overboard vent hose (8) at engine.

h. Disconnect the engine fuel inlet hose (9) at the fuel filter.

Note

Index bellmouth flex coupling to forward firewall to facilitate reassembly.

i. Remove screws (10), nuts (11) and washers (12), attaching the bellmouth (13) to the engine adapter flange located on the forward end of the compressor section.

j. Disconnect gas producer control lever on right side of engine.

k. Disconnect at forward firewall, the free-wheeling hose assemblies (14, 15). Cap off the firewall fittings to prevent gravity drain of transmission oil and entry of foreign material. Disconnect at lower firewall the compressor pressure hose (16). At forward engine deck, disconnect the engine oil pressure hose (17) and engine torque pressure hose assembly.

Note

On helicopters 716 through 913 disconnect engine oil pressure hose (48) at transducer connection (49) and engine torque pressure hose (50) at transducer connection (51). (See figure 7-13 , detail E.)

l. Disconnect the two fuel differential pressure hoses (19, 20) from forward side of fuel pump.

m. Disconnect the droop compensator control lever on left side of engine.

n. Remove the anti-icing control (21) from pad at top of engine and install lift assembly tool (Allison No. 6796963 or equivalent) on pad. Connect hoist to lifting tool and take up slack.

o. Remove the engine mount retention nuts (22) and washers (23). (Typical three locations.)

Note

Loosen nuts (46A) holding six engine bipod mount legs to airframe for additional clearance to remove engine.

p. Check engine and airframe to ensure engine is free of all connections to airframe before lifting engine.

q. Lift engine carefully and lower onto a suitable stand.

r. If engine is to be replaced, remove all hardware that is not supplied with replacement engine.

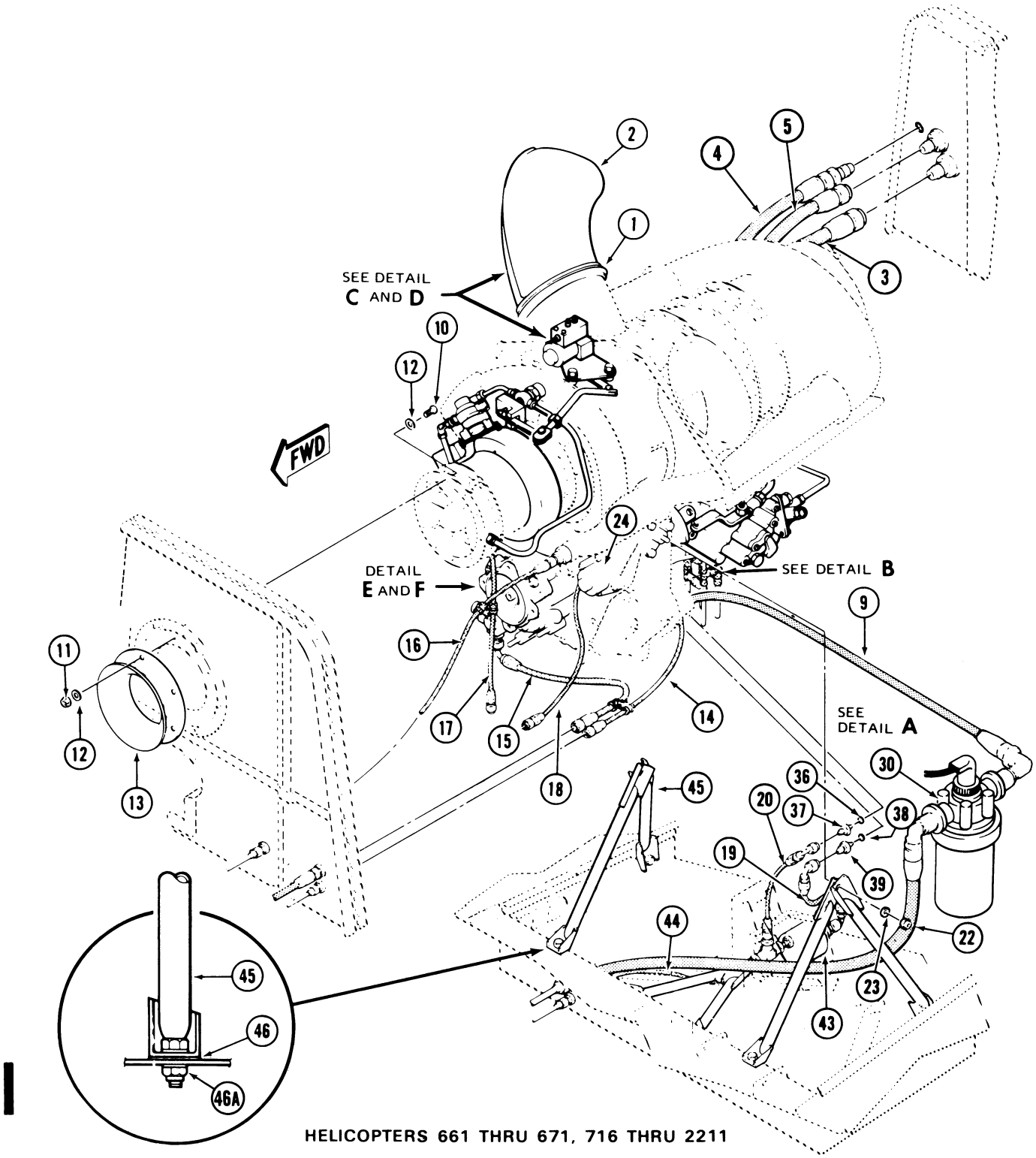

Figure 7-13. Engine Installation – Model 250-C20 (Sheet 1 of 5)

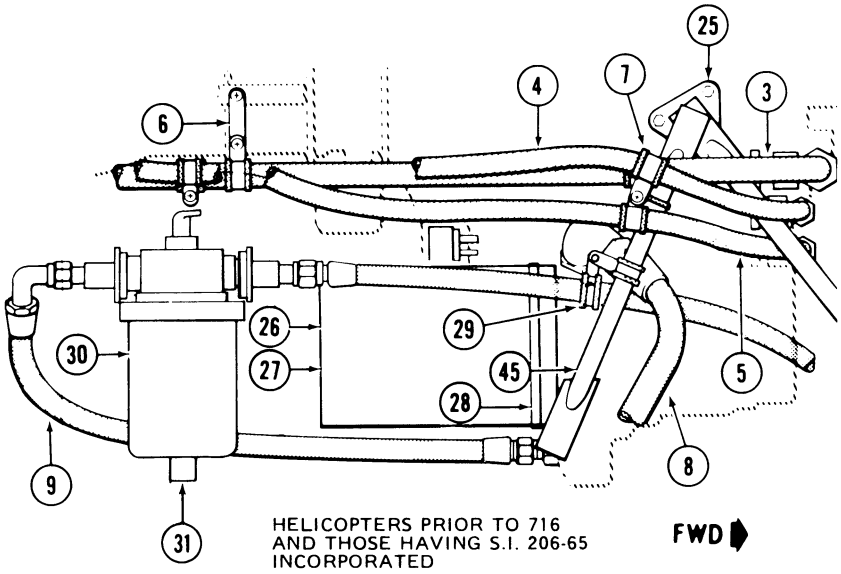

LOOKING INBOARD RH SIDE

DETAIL **A**

1. Clamp
2. Exhaust Stack
3. Hose, Engine Oil Inlet
4. Hose, Engine Oil Outlet
5. Hose, Oil Tank Vent
6. Clip
7. Clamp
8. Hose, Accessory Drive Vent
9. Hose, Fuel Supply
10. Screw
11. Nut
12. Washer
13. Bellmouth
14. Hose, Freewheeling Oil Supply
15. Hose, Freewheeling Oil Return
16. Hose, Compressor Pressure
17. Hose, Engine Oil Pressure
18. Hose, Engine Torque Pressure
19. Hose
20. Hose
21. Anti-Ice Control
22. Nut
23. Washers
24. Tachometer Generator (Power Turbine — Left) (Gas Producer — Right)
25. Fitting
26 Starter Generator
27. Adapter
28. Clamp
29. Clamp
30. Airframe Mounted Fuel Filter
31. Filter Drain Valve
32. Exhaust Collector Vent
33. Heat Shield Drain
34. Combustion Chamber Drain
35. Fuel Pump Seal Drain
36. Packing
37. Union
38. Packing
39. Reducer
40. Tube
41. Actuator Lever
42. Spacer
43. Fuel Filter Pressure Switch
44. Hose, Purge
45. Mount
46. Shim
46A. Nut
47. Tube
48. Hose, Engine Oil Pressure
49. Transducer
50. Hose, Engine Torque Pressure
51. Transducer
52. Hose, Freewheeling Vent
53. Fireshield and Exhaust Collector Drain, Helicopters 1742 thru 2211

206061-83-2

Figure 7-13. Engine Installation — Model 250-C20 (Sheet 2 of 5)

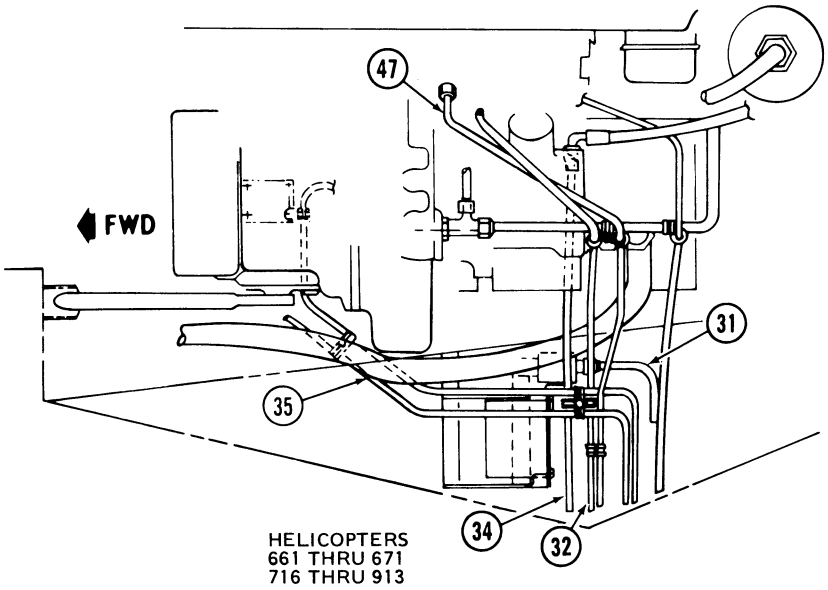

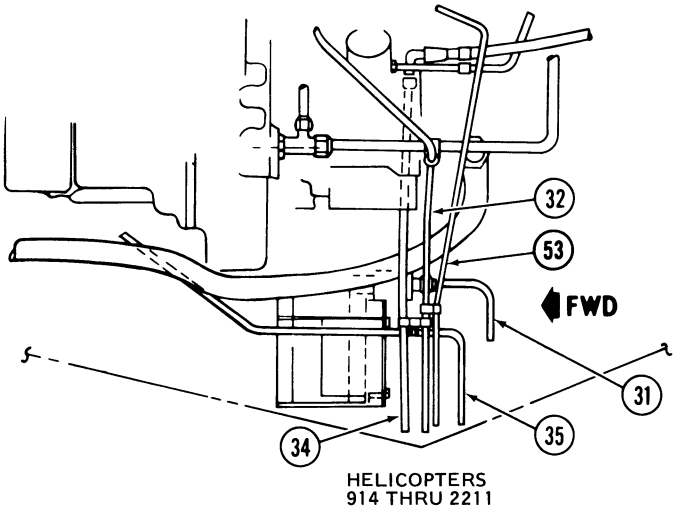

DETAIL B

206061-42-7A

Figure 7-13. Engine Installation — Model 250-C20 (Sheet 2A of 5)

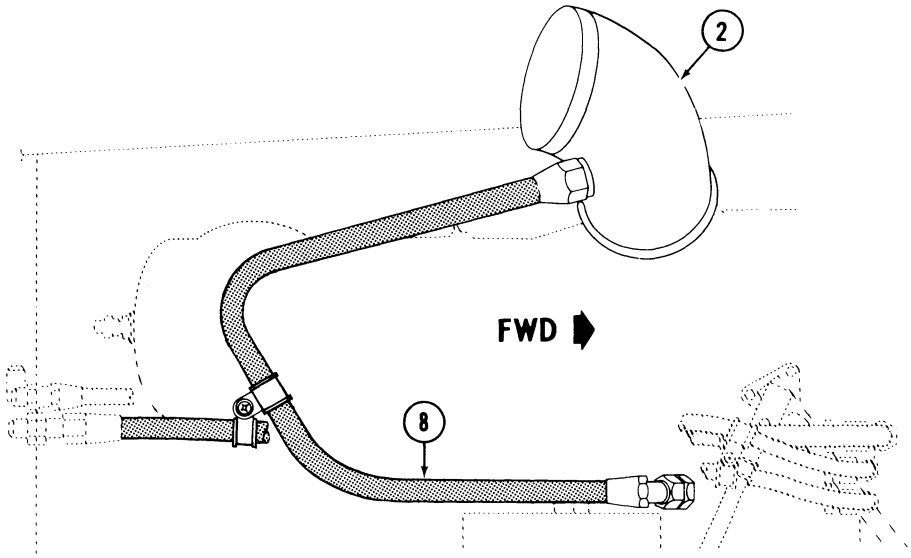

DETAIL C

LOOKING INBOARD RIGHT SIDE

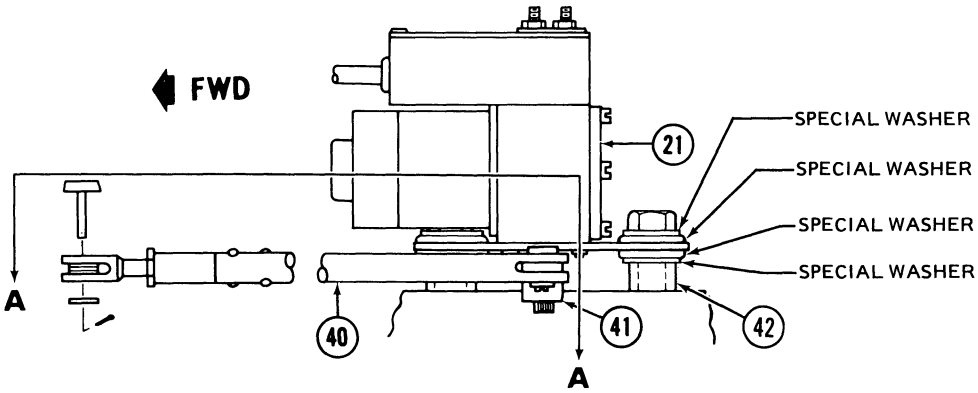

DETAIL D

LOOKING INBOARD LEFT SIDE

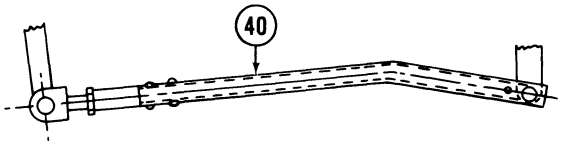

HELICOPTERS 664 THRU 671, 716 THRU 2211
EQUIPPED WITH (206-062-625-3) ACTUATOR.
(REFER TO SERVICE LETTER 206-106).

VIEW A-A

206061-42-3B

Figure 7-13. Engine Installation – Model 250-C20 (Sheet 3 of 5)

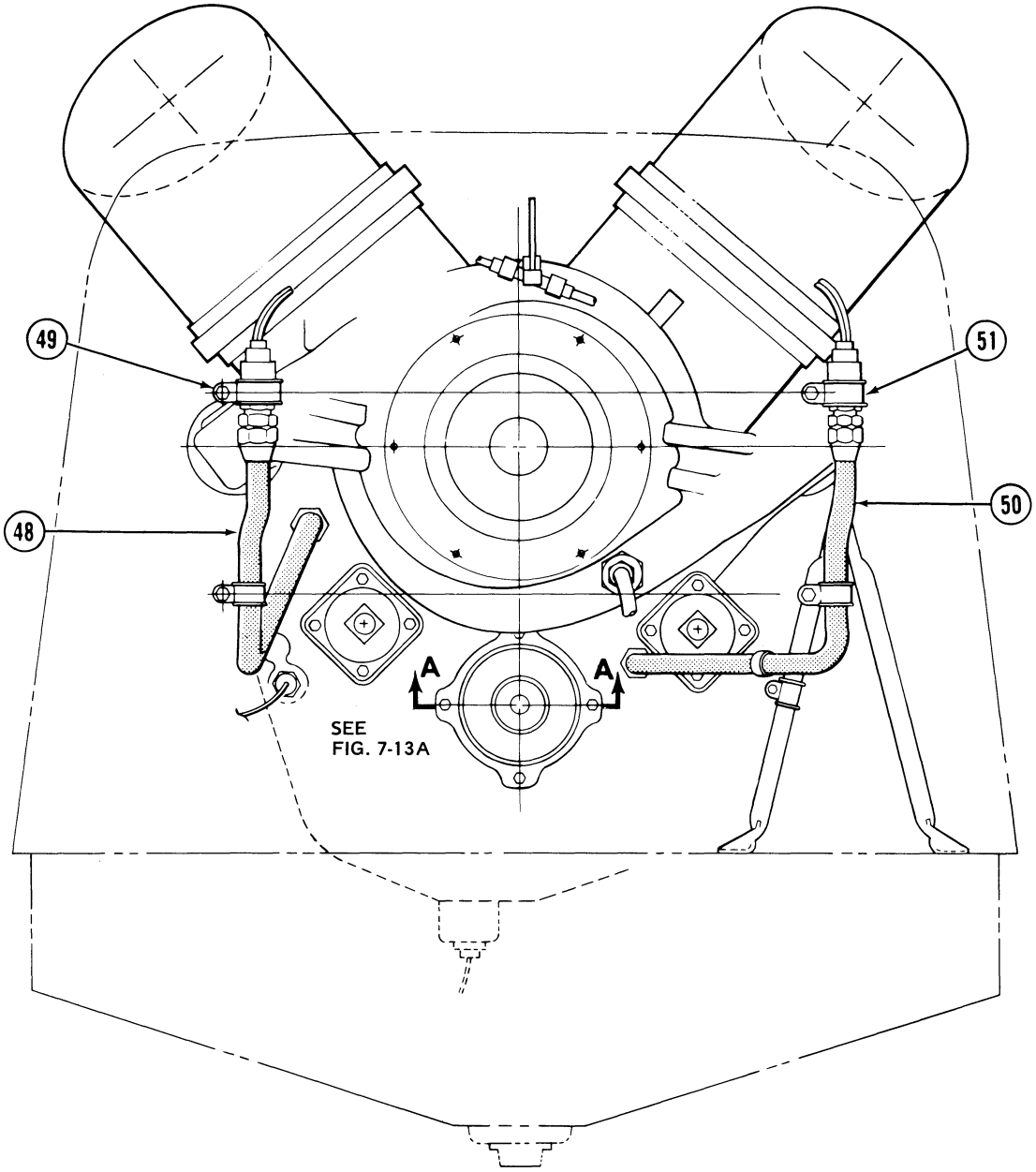

DETAIL **E**

ENGINE FRONT VIEW — HELICOPTERS S/NOS. 716 THROUGH 913

Figure 7-13. Engine Installation — Model 250-C20 (Sheet 4 of 5)

206061-62-1

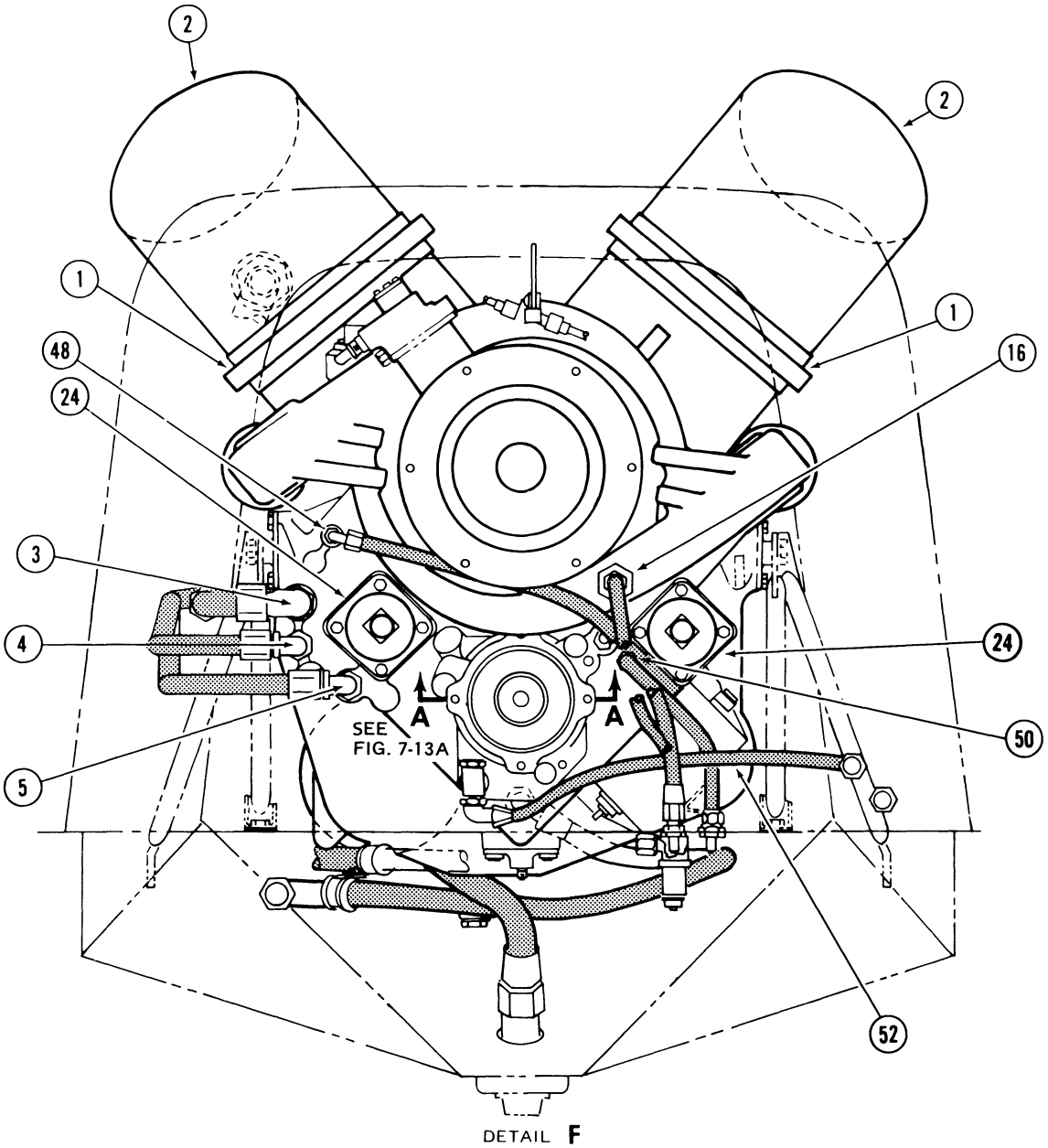

ENGINE FRONT VIEW — HELICOPTERS S/NOS. 914 THROUGH 2211

206061-62-2

Figure 7-13. Engine Installation — Model 250-C20 (Sheet 5 of 5)

7-57. ENGINE BUILD-UP.

Note

Install parts in any practical order, using the following steps as a guide to build-up the replacement engine. (See figure 7-13) Inspect hose assemblies and replace if any of the following conditions exist: Plies have separated, excessive cold flow, chafing, or if hose is hard and inflexible. Make sure hoses and lines are properly supported and clamps are secure. Discard and replace O-rings and gaskets at all points of installation requiring O-rings or gaskets. Accomplish build-up replacement engine before installation.

a. If engine replacement is due to internal failure and metal contamination is suspected the following shall be accomplished:

(1) Replace oil cooler (manufacturer does not recommend repairing damaged or contaminated oil coolers).

(2) Clean and flush engine oil reservoir, oil lines and all fittings.

b. Install replacement engine on a suitable stand and install protective covers on compressor inlet and exhaust ports.

Note

If a replacement engine is installed, the engine furnished control levers shall be removed and replaced with lever (206-061-107-3) (power turbine governor) and lever (206-061-716) (fuel control) on helicopters prior to 914. On helicopters 914 and subsequent use lever (206-061-107-1).

c. Install tachometer generators (24) on front of engine. Mount with engine supplied hardware.

Note

Studs on the front power take-off pad may require replacement when installing a new engine. (Refer to Section VI , freewheeling installation.)

c-1. Remove existing Allison freewheeling unit (front and rear power take off) seals and install new seals as follows: (See figure 7-13A.)

(1) Remove front and rear 6854086 seals using 6796941 oil seal installation and removal kit. Exercise caution not to contaminate or damage engine during seal removal. Discard seals after removal.

(2) Apply a coating of grease (item 21) to the double lip surface of new 524919 seals and install with metal part facing outboard using the 6796941 oil seal installation and removal kit.

d. Install freewheeling assembly. (Refer to **Section VI**) Install hoses (14, 15) at forward and aft end of freewheeling unit. Clamp aft hose (14) to engine line.

e. Install restrictor and gasket in engine oil pressure port located at front of accessory gearbox. Install hose (17).

f. Install bushing, reducer and two O-ring in compressor pressure connection. Install hose assembly (16). Install and connect clamps between compressor pressure hose (16) and engine oil pressure hose (17).

Note

Install clamps between compressor pressure hose (16) and engine oil pressure hose (17) on helicopters 914 through 2211.

g. Position engine mount fittings (25) over engine pad, align holes and install bolts and washers. Torque bolts and safety wire. (Typical at three locations.) Do not lockwire left fitting until engine is installed. (Refer to paragraph 7-58 .)

h. Install starter-generator (26, figure 7-13 on engine, mount with engine supplied hardware. (Refer to paragraph 7-58 , step e.)

i. Install reducer and packing in engine fuel inlet port located on fuel pump housing. Install hose assembly (9) on reducer. Install drain valve (31) in fuel filter housing with new packing.

j. Install elbow, nut and gasket in accessory drive vent port, and connect hose (8, figure 7-13 , detail A). If venting discharge is to exhaust stack (2), install union and gasket in vent port and connect hose (8, figure 7-13 , detail C.)

k. Install elbow, nut and packing in engine oil inlet connection located on front of accessory gearbox and install hose assembly (3). Install union and packing in engine oil outlet port and install hose assembly (4). Install union and packing in oil tank vent port and install hose assembly (5). Connect clip (6) from hose clamps to engine heat shield. New engine heat shield may have to be drilled for clip (6).

l. Install restrictor assembly and packing in engine torque pressure port and install hose assembly (18).

m. Install the exhaust collector drain tube (32), heat shield drain (33) and the combustion chamber drain (34). Install a union and packing in the fuel pump seal drain port and connect drain tube (35). Connect drain tubes to engine lines with clamps.

n. Install union (37) and packing (36) in forward side of fuel pump at the after filter pressure drop port and install reducer (39) and packing (38) in the before filter pressure drop port.

o. Inspect all installations for security and inspect engine intake opening for foreign objects.

p. On helicopters equipped with the CECO fuel control adjust maximum fuel flow adjustment screw by moving the mark etched on the adjusting screw the shortest distance from the plus (+) (270 pounds-hours) to the minus (-) mark (235 pounds-hour). Use a 3/16 inch allen wrench for adjustment. (See figure 7-22)

q. On helicopters equipped with the Bendix fuel control. Adjust the maximum fuel flow adjustment screw. (See figure 7-21) Adjustment screw is located near the drive end of the fuel control and a pointer is attached to the screw with a fixed protractor attached to the drive body. The pointer is to be aligned with the minus mark on the protractor.

r. If engine has a Bendix fuel system, install second accumulator and double check valve in accordance with paragraph 7-57D .

7-57A. SECONDARY ACCUMULATOR AND DOUBLE CHECK VALVE.

NOTE

A second accumulator and double check valve are on all 250-C20 engines equipped with Bendix fuel system. Transfer accumulator to replacement engine during change.

7-57B. REMOVAL — SECOND ACCUMULATOR AND DOUBLE CHECK VALVE.

a. Remove hose assembly (1, figure 7-13B) between second accumulator (9), and reducer on power turbine governor. If installed, remove clamp installation. Install protective cap on reducer.

b. Remove nut (4), washer (5), spacer (7), clamp (8), and bolt (6) from second accumulator (9) and fireshield (10).

c. Remove second accumulator (9) from elbow (11) and discard packing.

d. Remove double check valve (12) from first accumulator (13) and install protective cap on accumulator.

7-57C. INSPECTION AND REPAIR — SECOND ACCUMULATOR.

a. Clean and test first and second accumulators (13 and 9, figure 7-13B) any time they are removed from the engine. (Refer to Allison Operation and Maintenance Manual, 10W2.)

b. Inspect parts for evidence of damage, leakage and chafing. Replace parts as required to ensure airworthiness.

7-57D. INSTALLATION — SECOND ACCUMULATOR AND DOUBLE CHECK VALVE.

NOTE

When a replacement engine is to be installed, the second accumulator, double check valve and hardware must be removed from engine and reinstalled on replacement engine.

a. Remove hose assembly (1, figure 7-13B), union (2), and elbow (11) from the first accumulator (13). (Refer to Allison Gas Turbines Parts Catalog, 10W4.)

b. Lubricate five new packings (3) with lubricating oil (item 20, table 1-1).

c. Position two packings (3, figure 7-13B) on one union (2) and install on boss end of the double check valve (12). Install elbow (11) onto union, then torque both to valve 55 to 80 inch-pounds.

d. Position a packing (3) on end of double check valve (12) and install to first accumulator (13). Torque valve 40 to 65 inch-pounds to accumulator. Loosen clamp (8) on first accumulator and attaching nut for tube assembly (14). Rotate first accumulator so that elbow (11) is pointing down.

e. Position a packing (3) on other union (2) and install to second accumulator (9). Torque union 55 to 80 inch-pounds to accumulator.

f. Install second accumulator (9) to elbow (11). Torque accumulator 40 to 65 inch-pounds.

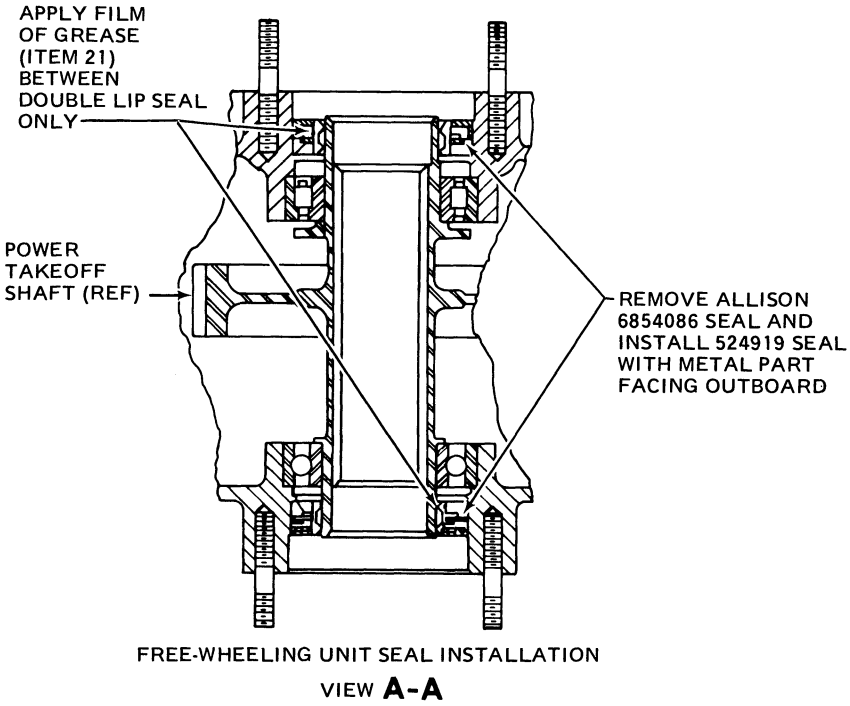

Figure 7-13A. Seal Installation — Freewheeling Unit

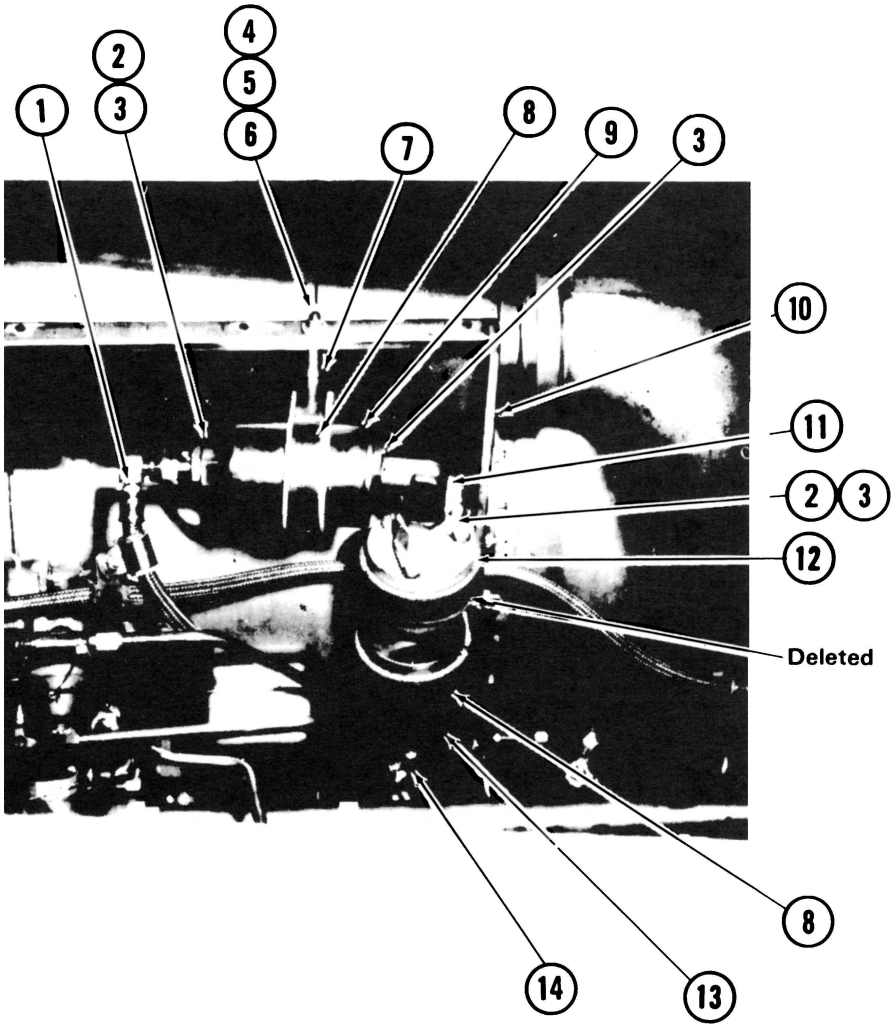

1. Hose Assembly
2. Union
3. Packing
4. Nut
5. Washer
6. Bolt
7. Spacer
8. Clamp
9. Second Accumulator
10. Fireshield
11. Elbow
12. Double Check Valve
13. First Accumulator
14. Tube Assembly

206063-3

Figure 7-13B. Secondary Accumulator and Double Check Valve

g. Install clamp (8), bolt (6), spacer (7), washer (5), nut (4), to second accumulator (9) and align with fireshield (10). Torque clamping nut 35 to 40 inch-pounds.

h. Connect hose assembly (1) to second accumulator (9) and to reducer on power turbine governor. Torque hose nuts 80 to 120 inch-pounds. Support the hose as required to prevent chafing.

i. Retorque nut on tube assembly (14) to first accumulator (13) and nut for accumulator clamp.

j. Inspect installation to ensure that all fittings are torqued and that all lines have adequate clearance to prevent chafing.

7-58. INSTALLATION — ENGINE ASSEMBLY.

Note

If six engine bipod mount leg nuts (46A) were loosened during engine removal, refer to paragraph 7-64 .

a. Install lift assembly tool on pad at top of engine. Connect hoist and carefully lower engine into the airframe, aligning the engine fittings (25, figure 7-13) with the engine mounts (45). Engage the mounts (45) with studs on fittings (25) and install washers (23) and nuts (22). Torque nuts (22) 125 to 145 inch-pounds and engine support nuts (46A) to 90 inch-pounds. Remove the hoist and lift assembly. Connect the linear actuator support brace to the left mount fitting. Safety bolts in fitting (25) with 0.032 inch lockwire (item 19, table 1-1).

Note

Retorque engine mount nuts (22) to 125 to 145 inch-pounds and engine support nuts (46A) to 90 inch-pounds at the first 100 hour inspection and after each engine change.

b. Remove compressor inlet cover and align the bellmouth assembly (13) with the forward flange of engine inlet and install screws (10), washers (12) (one under screw head and one under nut) and nuts (11).

c. Install anti-icing control actuator (see Detail D) on pad located at top of engine. Install spacers (42) between actuator bracket and engine with the large spacer over the forward hole. Install 3/8 inch bolt and washer in forward hole and 5/16 inch bolts, washers and spacers in the two aft holes. Torque the forward and aft bolts 5 to 10 inch-pounds and safety bolt heads with 0.032 inch lockwire (item 19, table 1-1). Loosen engine anti-icing valve and rotate 90 degrees to the left so the actuator lever is horizontal and toward the left. Install tube assembly (40) with clevis over the engine valve lever and the other end of the tube over the actuator lever (41). Secure the tube with flathead pins, washers and cotter keys. Rig anti-icing actuator. (Refer to paragraph 7-59 .)

d. Install tail rotor driveshaft and the engine to transmission driveshaft. (Refer to Section VI.)

CAUTION

The starter-generator must be supported until clamp is installed and properly torqued (50 inch-pounds). Failure to support starter-generator can result in premature failure of shaft.

e. Check starter generator (26) to determine that the torsional damper members of the starter-generator are in hard contact with each other so as to provide effective dampening. (Refer to Section XI.) Install starter-generator as follows:

(1) Clean male and female splines of starter-generator (26), adapter (27), and accessory drive with cleaning solvent (item 12, table 1-1). Lubricate splines with grease (item 82, table 1-1).

(2) Position starter-generator on adapter (27) and install clamp. Tap lightly around clamp while tightening nut to ensure proper seating. Torque nut 50 inch-pounds.

f. Make electrical connections at the following: temperature indicating harness, anti-ice valve actuator, power turbine tachometer, gas producer tachometer, ignition exciter and fuel pressure differential switch. (Refer to Section XI. Electrical Section for routing and clamping.)

g. Connect the following hose assemblies: engine oil outlet (4, figure 7-13), oil inlet (3) and oil tank vent (5) at the aft firewall; engine fuel inlet hose (9) at fitting on forward firewall, accessory drive overboard vent (8) to fitting on lower firewall (helicopter 4 through 153), free wheeling assembly hoses (14, 15) to unions on forward firewall, fuel pressure differential switch hoses (19, 20) to forward side of fuel pump, engine oil pressure hose (17) to engine deck fitting, engine torque pressure hose (18) to deck fitting, compressor pressure hose (16) to deck fitting. Clamp hose assemblies as illustrated in figure 7-13.

Note

On helicopters 716 through 913, connect engine oil pressure hose (48) to transducer connector (49) and engine torque pressure hose (50) to transducer connector (51). (See figure 7-13, detail E.)

h. Connect and rig engine controls. (Refer to paragraph 7-101)

i. Inspect engine installation to ensure that all installations are complete. Check security of installations.

CAUTION

Prior to installing exhaust stacks, inspect attaching flange area for warping, dents, cracks and burned spots that would cause a leaking exhaust joint.

j. Install cowl and exhaust stacks. (Refer to Section VIII for cowl installation instructions.) Position exhaust stack (2, figure 7-13) and clamp (1) on engine. Tap clamps lightly to seat clamps while tightening clamp nut until clamp is snug on exhaust stack and flange. Add an additional 10 to 12 inch-pounds torque, but do not exceed 25 inch-pounds torque. Install opposite exhaust stack in same manner.

Note

If exhaust stack clamp (1) is of the two piece type, position clamps on stack with studs facing outboard, install nuts and torque to 30 inch-pounds. Grasp top of stack and shake, while lightly tapping around clamp, then recheck torque. Repeat this procedure until the required torque can be maintained. Safety wire nuts to clamp. After 30 minutes to engine operation, recheck torque. If check reveals loss of torque, re-torque to 30 inch-pounds and operate engine an additional 30 minutes and repeat entire procedure. Safety wire clamp nuts to clamp.

Note

If right side exhaust stack (see figure 7-13, detail C) has the overboard vent hose attachment, install hose after installing exhaust stack and clamp.

k. Connect battery.

l. Refill engine oil reservoir. (Refer to Section I for amount and grade.) Refill transmission to replace oil lost in freewheeling unit and lines. To prevent possible damage to the engine, the following procedure should be used to prime the engine oil pump prior to starting the engine.

Note

Engine oil pumps will normally prime themselves. However, there have been a few instances where the pumps have continued to run in a dry or unprimed condition following the initial engine start.

(1) Disconnect the engine oil pump inlet hose assembly from the elbow fitting.

(2) Loosen the elbow lock nut and rotate the elbow to an upright position.

(3) Fill the elbow to spillover the engine oil.

(4) Reposition elbow and connect the engine oil pump inlet hose assembly and tighten appropriate components.

CAUTION

Do not exceed starter limitation while motoring engine.

m. Prior to starting, motor engine until oil pressure is indicated. Do not exceed time limits established for energized starter. (Refer to 206 Flight Manual, Section I.)

Note

If pressure is not indicated within 30 seconds, stop and determine the cause.

n. Check for indications of leaks after ground run. If leaks are found, correct and refill reservoir as required.

Note

Helicopters prior to 914. If a new engine is being installed or if a new turbine outlet temperature, TOT, harness is installed on the engine at any time, check the TOT circuit in the helicopter for an 8 plus or minus 0.05 ohms in accordance with Section XI. An instrument which will measure the resistance in the range and accuracy of this requirement is available from Wheatstone bridge Model RN-1, Crockett Engineering Co., P.O. Box 47287 Dallas, Texas 75247.

Helicopters 914 and subsequent. If a new engine is being installed or if a new turbine outlet temperature, TOT, harness is installed on the engine at any time, check the TOT circuit resistance of not less than 5 ohms and not more than 200 ohms with a Wheatstone bridge. Check indicator at 737°C and 793°C with Jetcal Analyzer or Barfield Tester. (Refer to Section XI.)

Note

After test flight check engine oil filter for contamination.

7-59. RIGGING ENGINE ANTI-ICING CONTROL.

a. Energize actuator (21, figure 7-13) to OFF position. Observe that shaft of actuator turned counter-clockwise (looking at end of shaft) until internal micro switch stops motor.

b. Move anti-icing valve lever (41) on engine to full forward position. (Closed position.)

c. Insert pin through clevis on tube assembly (40) and valve lever on engine, with clevis at midpoint extension of threads.

d. Insert pin through tube assembly (40) and lever (41).

e. Install splined end of lever (41) to actuator shaft. It may be necessary to adjust clevis on tube assembly (40) so lever (41) will line up with serrations on actuator and maintain closed position of valve on engine.

f. Remove pin from clevis end of tube assembly (40). Lengthen tube assembly (40) by turning clevis one-half turn to preload valve in the closed position. Reinstall pin in clevis.

g. Actuate motor to full ON (open position) and check that actuator is stopped by the internal microswitch and not by mechanical means.

7-60. POWER PLANT SYSTEMS.

7-61. DESCRIPTION. The major systems of the basic engine are fuel, lubrication, electrical anti-icing air and compressor bleed air. Refer to Allison Operation and Maintenance Manual No. 10W2 for a detailed description of each system.

7-62. ENGINE MAINTENANCE.

7-63. GENERAL. The maintenance procedures outlined in the following paragraphs, include only those systems and controls that are not a part of the basic engine. Maintenance and Overhaul instructions for the basic engine are found in Allison Publications 10W2 and 10W3.

7-64. ENGINE MOUNTS.

7-65. DESCRIPTION. The engine is supported on the service deck with three bi-pod mounts (45, figure 7-13) located on the right, left and lower side of the engine. Shims are provided at each mount leg for engine alignment.

CAUTION

If the engine mounts are removed, do not remove the bonded shims. These shims directly affect engine to transmission alignment. If removal is required, mark the shims to prevent loss or intermixing.

7-66. REMOVAL – ENGINE MOUNTS.

a. Remove engine. (Refer to paragraph 7-56.)

b. Remove bolts, washers and nut securing mounts to the airframe.

7-67. INSPECTION – ENGINE MOUNTS.

a. Inspect the tube assemblies and weld areas of the mount for cracks. If cracks are found, replace the mount.

b. Inspect mounting bolt threads and replace bolts as required.

c. Inspect engine mount and engine mount leg for nicks, scratches, and cracks. Refer to figure 7-14.

7-68. INSTALLATION – ENGINE MOUNTS.

a. Position mounts on the airframe and install bolts, washers (one under bolt head, one under nut) and nuts. Torque nuts to 90 inch-pounds.

b. Install engine (Refer to paragraph 7-58.)

7-68A. REPLACEMENT — ENGINE LOWER MOUNT ELASTOMERIC COMPONENTS.

Note

Replacement of engine mount elastomeric components is applicable only for helicopters with acoustic mount installed. (Refer to bulletin 206-80-10.)

a. Prepare helicopter for maintenance. Disconnect battery and/or electrical power supply.

b. Raise engine cowl side panels and secure. Disconnect vent hose (8, detail C, figure 7-13) to right exhaust stack (2). Cut lockwire and remove both exhaust stack clamps (1, figure 7-13). Remove stacks and engine cowling.

c. Disconnect anti-ice control (actuator) tube (40, figure 7-13). Remove hardware attaching control to engine and move to one side. Install engine lift tool (6796963), or equivalent, to engine pad. (Refer to paragraph 7-56 .)

d. Connect hoist to lift tool. Raise hoist only enough to remove engine weight from support legs and fittings.

e. Remove hatbox upholstery from rear of cabin to gain access to engine lower center support legs attaching hardware to roof.

f. Disconnect lower center support legs (5, figure 7-14A) from engine fitting (7) by removing cotter pin (11), nut (10) and washer (9).

g. Loosen hardware attaching the lower support legs (5) to fuselage at the forward ends. Gain access to nuts (1) inside cabin roof through hatbox opening. Loosen hardware only enough to free the legs from the engine fitting. Remove the elastomeric washer, shims and elastomeric bushing and aft end of support legs (5) and fitting (7).

Note

Recommend removed elastomeric washer, bushing and shims be retained, if serviceable, for spares replacement at the two side mount locations.

h. Install bushing (6) on engine fitting (7), two lower support legs (5), spacer (8), washer (9) and nut (10). Tighten nut only enough to hold parts in place at this time.

Note

Long end of bushing (6) (end with maximum edge distance from hole center) shall be oriented aft. Chamfer side of bushing (6) and spacer (8) to face support legs (5).

i. Secure forward ends of the two lower support legs (5) to fuselage with hardware loosened in step 7. Torque nuts to 90 inch-pounds.

j. Secure aft ends of the two support legs (5) to engine fitting (7) by torquing nut 125 to 145 inch-pounds. Install cotter pin (11).

Note

Retorque nut 125 to 145 inch-pounds at the next 100 hour inspection.

k. Lower hoist, disconnect and remove engine lift tool.

l. Install anti-ice control to engine and connect control tube (40, figure 7-13). (Refer to paragraph 7-58 .)

m. Install engine cowling, both exhaust stacks and connect vent hose. Close and latch engine side panels. (Refer to paragraph 7-58 , step j.)

n. Install hatbox upholstery in rear of cabin.

o. Connect battery and prepare helicopter for flight operations.

7-69. FUEL SYSTEM.

7-70. DESCRIPTION. The fuel system incorporates a single bladder type fuel cell located below and aft of the passenger seat. Installed within the fuel cell are two electrically operated boost pumps, lower and upper tank indicating unit and sump drain valve. (See figures 7-15 and 7-16) The boost pumps are interconnected and supply fuel through a single hose assembly to the fuel shut-off valve, and from the shut-off valve to the airframe mounted fuel filter, engine mounted fuel filter and pump. The boost pumps incorporate pressure switches in the discharge ports and drain plugs in the pump drain port. The fuel cell is filled from the right side and has a capacity of 76 U.S. gallons. Access to the boost pumps, lower tank unit and solenoid drain valve is from the bottom of the fuselage and access to the upper indicating unit is gained from a cover plate located on deck aft of passenger seatback. Access to the fuel shut-off valve and vent line is in the fuel

compartment located on the right side above the filler cap. Provisions are also made in the fuel compartment for combustion heater fuel and fuel pump purge line.

7-71. MAINTENANCE – FUEL SYSTEM. General maintenance of the fuel system consists of visual inspections, ground operational checks, filter replacement,

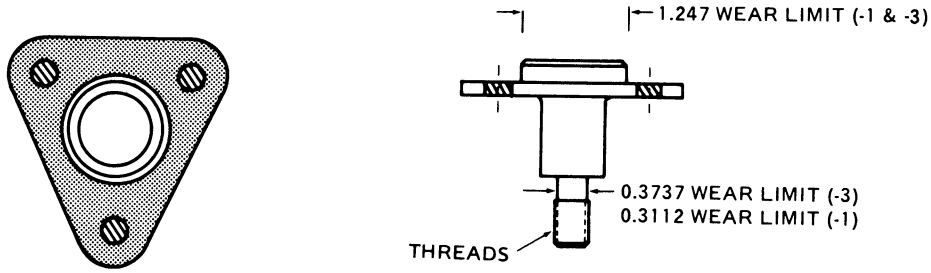

206-061-104-1 & -3 ENGINE MOUNT FITTING

DAMAGE LOCATION SYMBOLS

TYPE OF DAMAGE	MAXIMUM DAMAGE AND REPAIR DEPTH		
MECHANICAL	0.005 in.	0.01 in.(1)	0.05 in.
CORROSION	0.003 in.	0.01 in.	0.025 in.
MAXIMUM AREA PER FULL DEPTH REPAIR	20% of area	10% of surface area	25% of area
EDGE CHAMFER	0.01 in.	0.02 in.	0.03 in.

NOTE : (1) Applicable for both sides of flange threads.
Thread damage that does not exceed a depth of one-third of thread and a length of one-quarter inch (one damage per bolt) is acceptable.

206060-36A

Figure 7-14. Engine Mount and Engine Mount Leg — Wear and Damage Limits (Sheet 1 of 2)

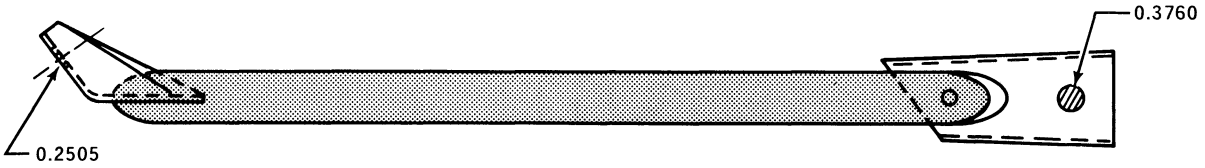

206-061-101 ENGINE MOUNT LEG

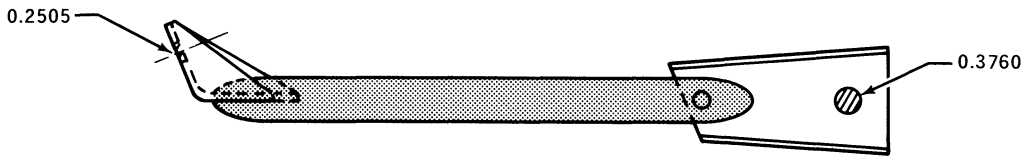

206-061-102 ENGINE MOUNT LEG

206-061-103 ENGINE MOUNT LEG

DAMAGE LOCATION SYMBOLS

TYPE OF DAMAGE	MAXIMUM DAMAGE AND REPAIR DEPTH		
NICKS, SCRATCHES	0.005 in.	0.002 in. (1)	0.02 in.
DENTS	0.005 in.	0.004 in. (2)	0.02 in.
CORROSION	0.003 in.	0.002 in. (1)	0.01 in.
MAXIMUM AREA PER FULL DEPTH REPAIR	20% of area	10% of surface	25% of area
EDGE CHAMFER	0.01 in.	—	0.02 in.

NOTES: (1) Allowable depth before and after repair.

(2) Non-repairable limit for smooth dents only. Sharp dents are not acceptable.

206060-37A

Figure 7-14. Engine Mount and Engine Mount Leg — Wear and Damage Limits (Sheet 2 of 2)

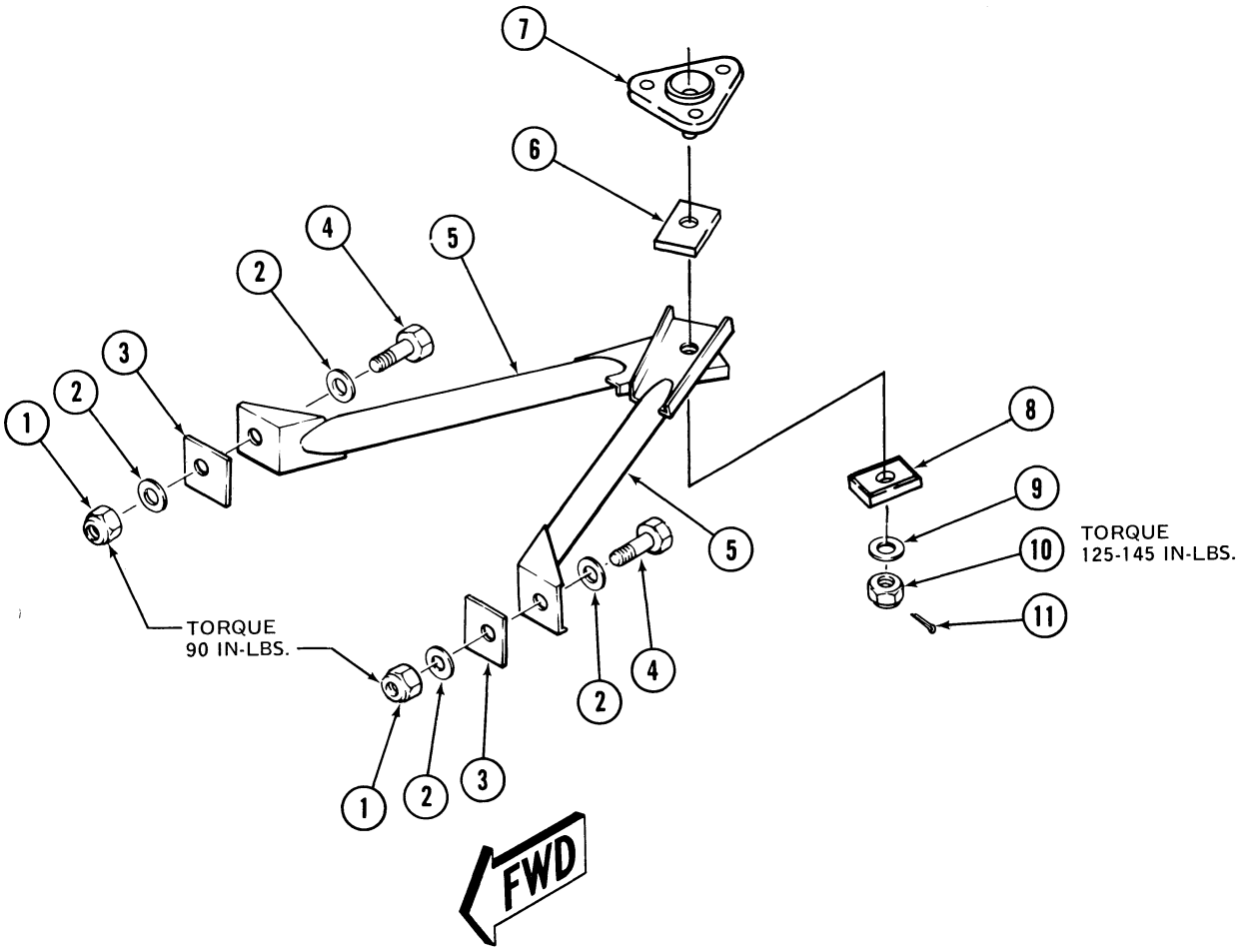

1. Nut
2. Washer
3. Shim
4. Bolt
5. Support leg
6. Bushing (206-061-108-101)
7. Fitting
8. Spacer (206-061-109-101)
9. Washer
10. Nut
11. Cotter pin

206060-51E

Figure 7-14A. Modification of Engine Lower Support Legs Acousti Mount

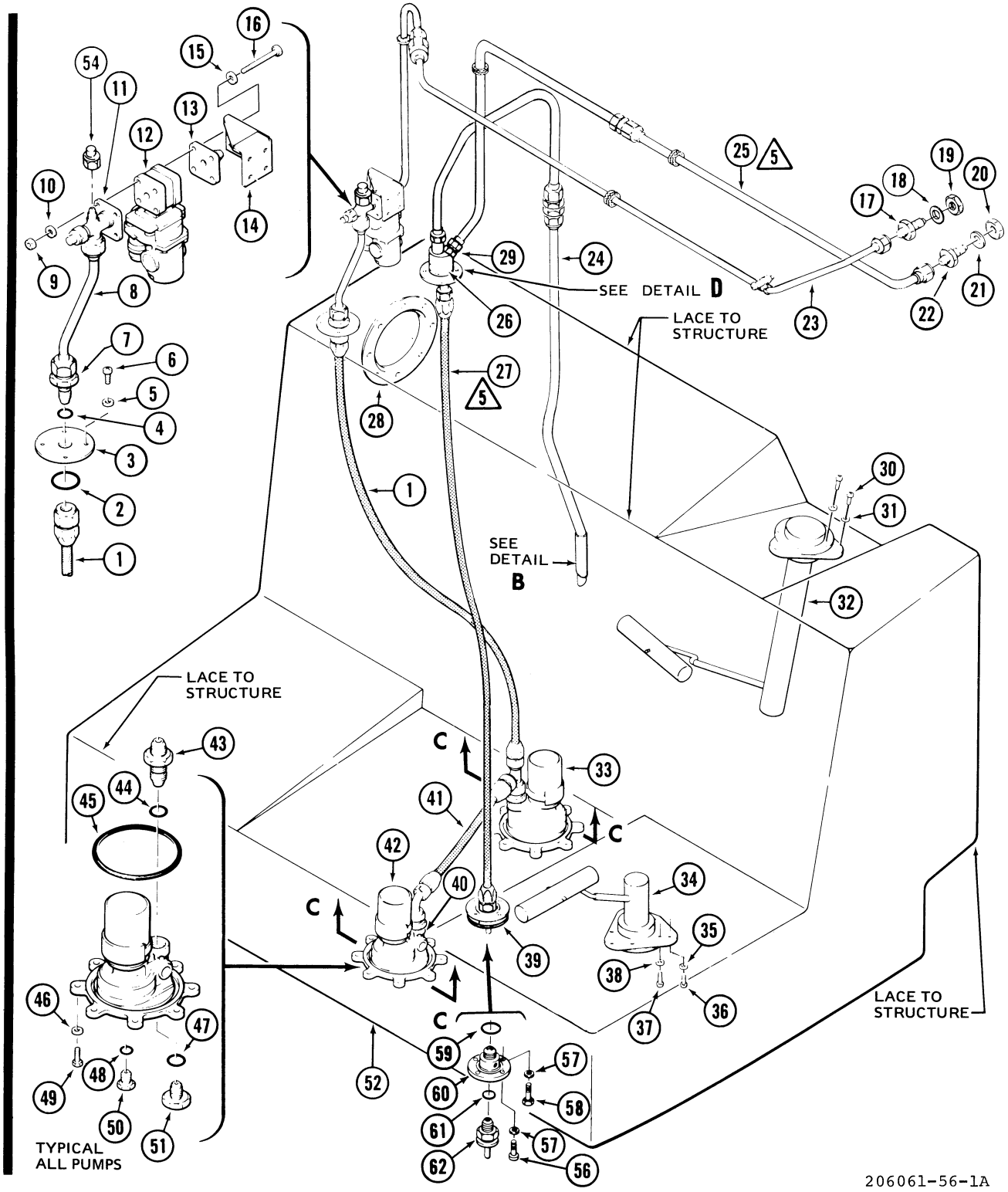

Figure 7-15. Fuel Supply System (Sheet 1 of 4)

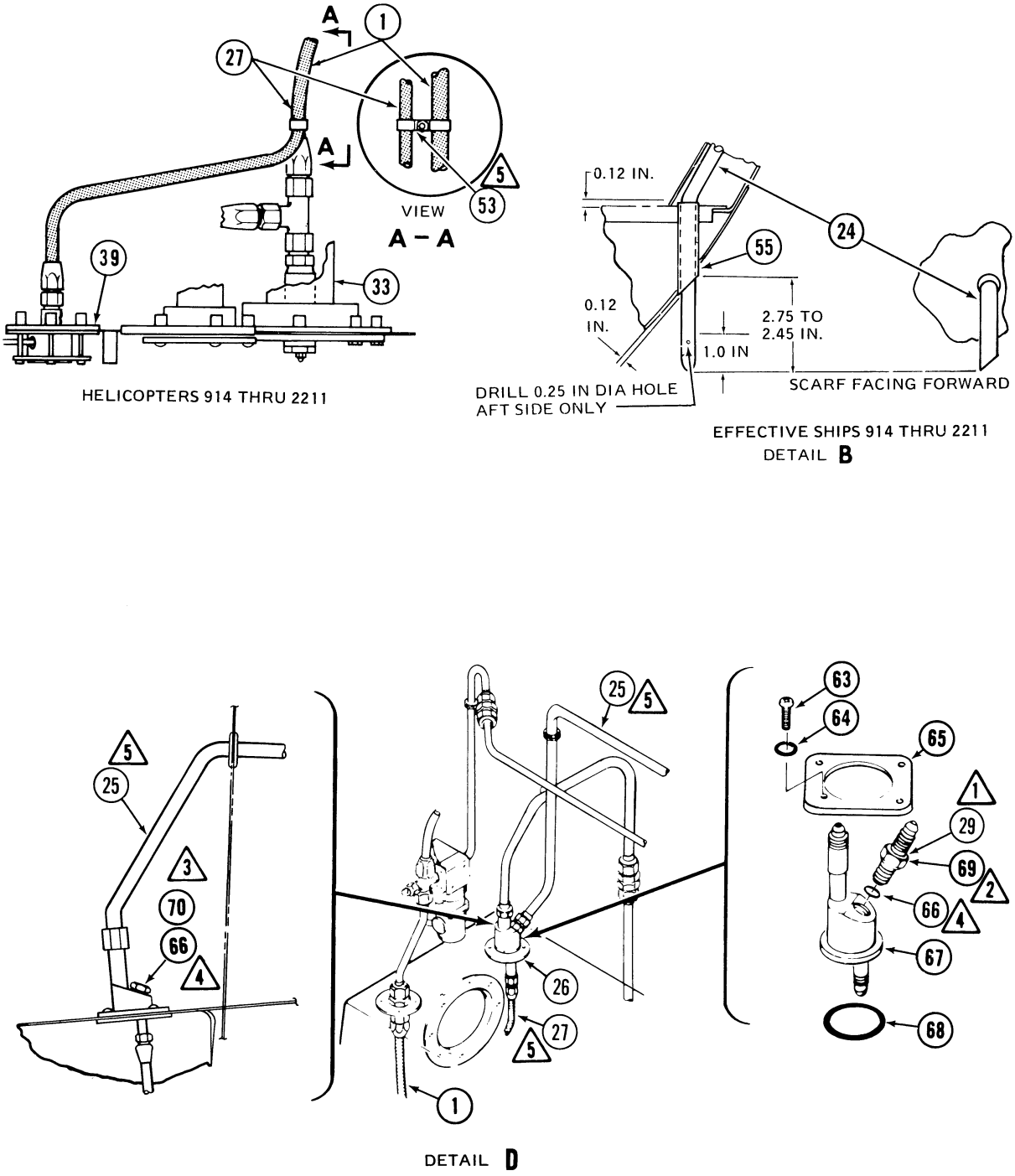

Figure 7-15. Fuel Supply System (Sheet 2 of 4)

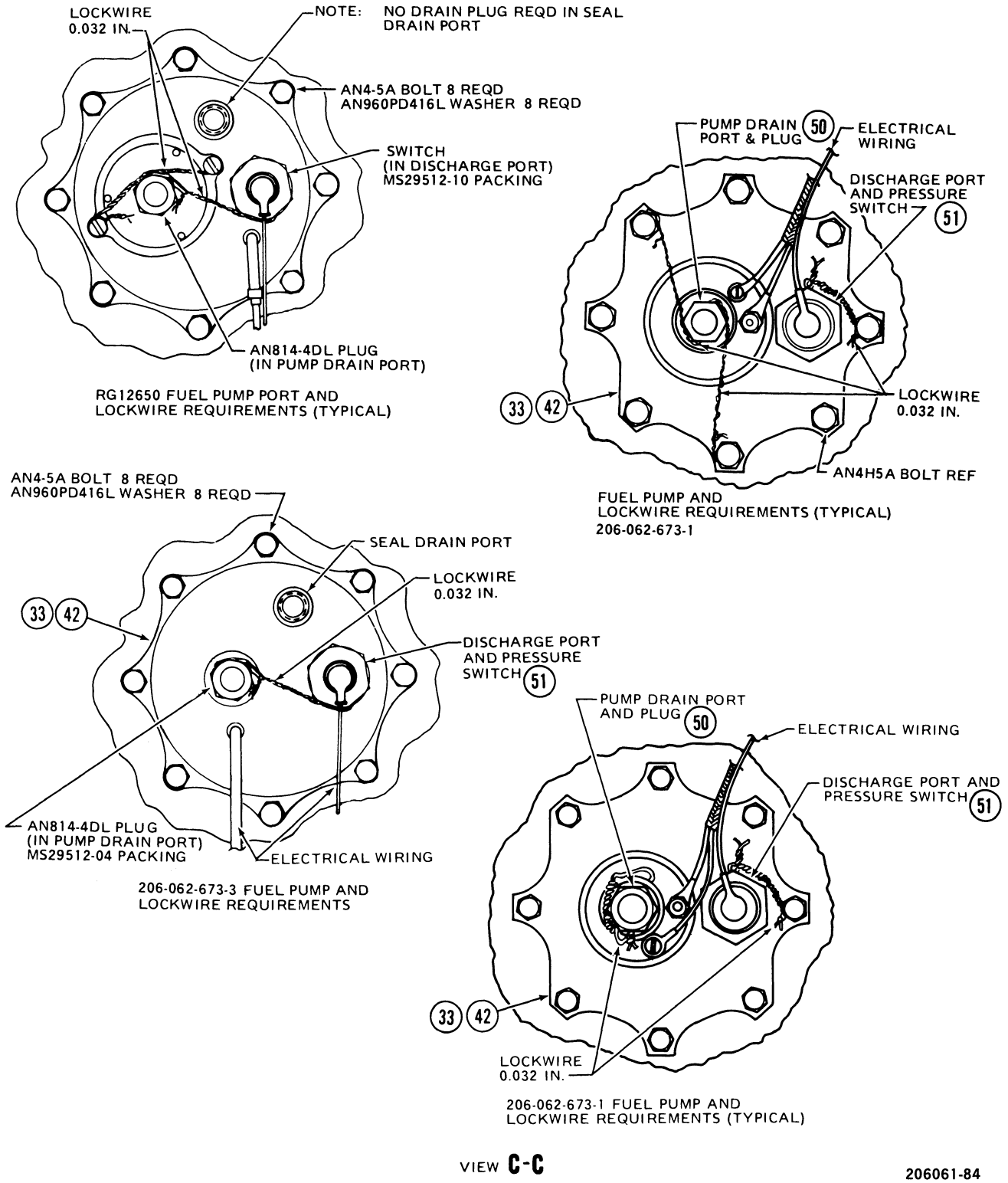

Figure 7-15. Fuel Supply System (Sheet 3 of 4)

1. Fuel Supply Hose
2. Packing
3. Fitting
4. Packing
5. Washer
6. Screw
7. Union
8. Tube
9. Nut
10. Washer
11. Cross
12. Valve Assembly
13. Connector
14. Mount Bracket
15. Washer
16. Bolt
17. Union
18. Washer
19. Nut
20. Nut
21. Washer
22. Union
23. Fuel Supply Line
24. Vent Tube
25. Tube (5)
26. Tank Vent Fitting
27. Hose (5)
28. Filler Adapter
29. Union (1)
30. Screw
31. Washer
32. Upper Tank Unit
33. Rear Fuel Pump
34. Lower Tank Unit
35. Washer
36. Screw
37. Screw
38. Washer
39. Fuel Solenoid Drain Valve
40. Check Valve
41. Interconnect Hose
42. Front Fuel Pump
43. Check Valve
44. Packing
45. Packing
46. Washer
47. Packing
48. Packing
49. Bolt
50. Plug
51. Pressure Switch (Discharge Port)
52. Fuel Cell
53. Clamp (5)
54. Cap
55. Hose
56. Screw
57. Washer
58. Bolt
59. Packing
60. Fitting
61. Packing
62. Drain Valve
63. Screw
64. Washer
65. Flange
66. Packing (4)
67. Fitting
68. Packing
69. Filter (2)
70. Plug (3)

NOTES:

(1) Helicopters 661 thru 671, 716 thru 1813.

(2) Helicopters 1814 thru 2058.

(3) Helicopters 2059 thru 2211.

(4) Helicopters 661 thru 671, 716 thru 2211.

(5) Helicopters 661 thru 671, 716 thru 2058.

206061-56-4A

Figure 7-15. Fuel Supply System (Sheet 4 of 4)

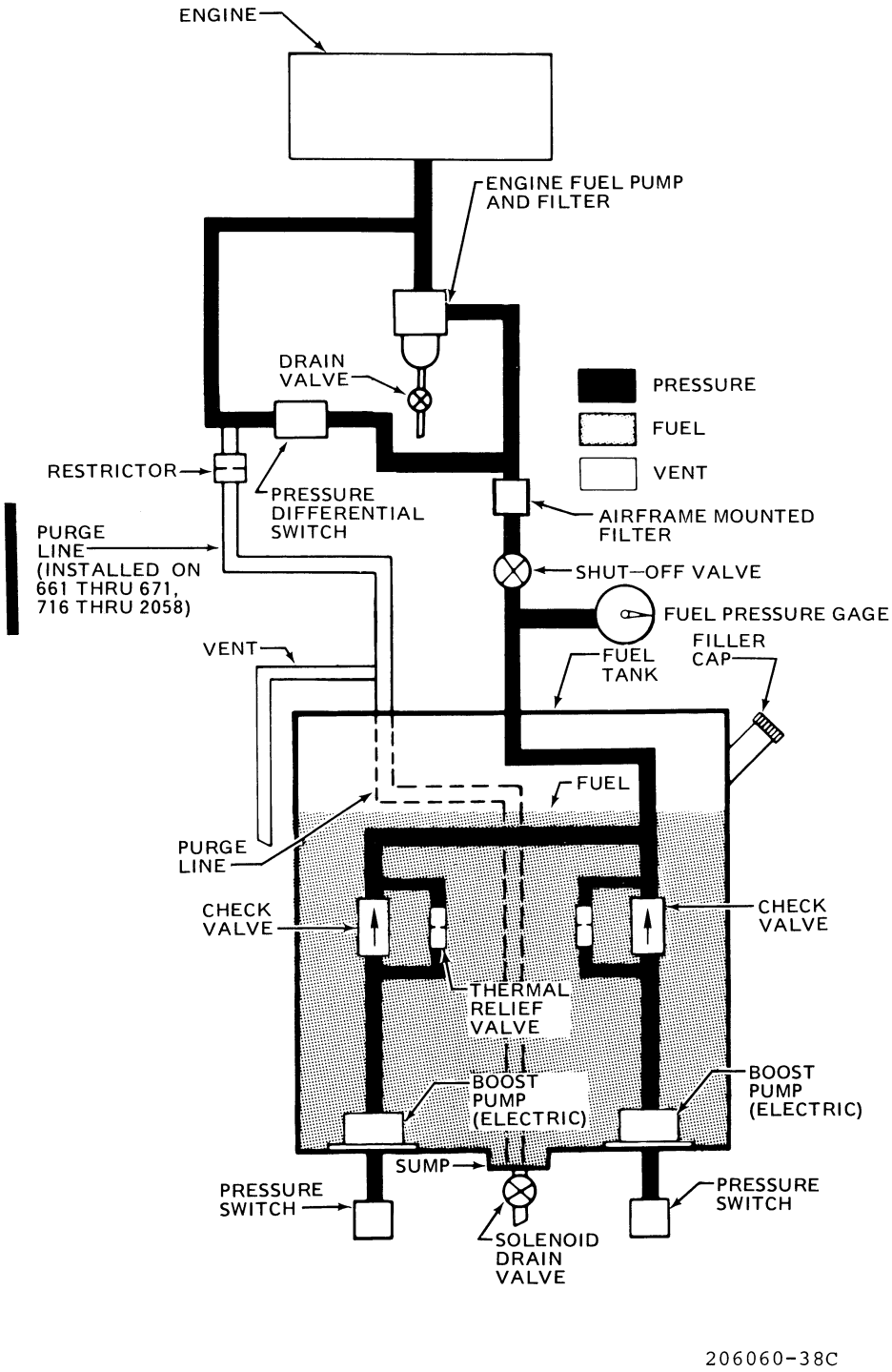

Figure 7-16. Fuel System Schematic (250-C20 Engine)

control linkage adjustment and replacement of piping, fittings, seals and components.

Note

Refer to Section XI and table 7-2 for trouble shooting fuel system. Refer to Operation and Maintenance Manual, Allison Publication 10W2 (C-20) for trouble shooting engine fuel system.

Table 7-2. Trouble Shooting Fuel System

INDICATION OF TROUBLE	PROBABLE CAUSE	CORRECTIVE ACTION
Engine fails to light off	Insufficient fuel in cell	Fill cell with correct fuel.
	Insufficient or no fuel pressure to engine pump	Turn on boost pumps and fuel shut-off valve.
	Boost pump inoperative	Check out pump per Section XI. Replace pump if required.
	Fuel contaminated	See engine Operation and Maintenance Manual 10W2.
	Defective boost pump, tank indicating, units or electrical malfunction	Replace valve. (Refer to Section XI.)
Fuel quantity system not indicating or has incorrect reading	Open or defective INST. CLUSTER circuit breaker (913 and prior)	(Refer to Section XI.)
	Fuel quantity press circuit breaker (914 through 2211)	Check and replace breaker.
	Loose circuit connections	Tighten connections.
	Defective indicator	Replace indicator.
	Improper resistance setting on R5 or R6	Check resistance and calibrate system.
	Defective tank unit system	Replace tank unit and recalibrate system.
	For calibration procedure, refer to Section X.	
No pressure, fuel pressure gauge fluctuates or has erratic readings	Air trapped in fuel boost pump	Bleed boost pumps. (Refer to paragraph 7-85, subparagraph 1.)
Fuel pump caution light on	Defective boost pump or fuel pressure switch. Defective boost pump check valves	(Refer to Section XI.) Replace pump or switch. Replace check valves.
Fuel filter caution light on	Clogged filter	Refer to paragraphs 7-92 and 7-92A.
Fuel boost pumps fail to operate when breaker is closed or circuit breaker trips	Electrical malfunction	(Refer to Section XI.)

7-72. REMOVAL – FUEL CELL.

WARNING

All defueling operations should be performed in an area where fire hazards are reduced to a minimum.

CAUTION

Handle the fuel cell with extreme care during removal to avoid damage to the cell. Protect all openings to prevent entry of foreign material.

a. Disconnect battery.

b. Defuel helicopter with a 1-1/2 degree nose down attitude.

WARNING

Observe the following safety precautions during defueling operations:

(1) If the fire fighting personnel are available, notify of intention of defuel.

(2) Wear shoes that are free of metal taps or protruding nails.

(3) Clear paths shall be maintained around helicopter being defueled, at all times, to permit rapid evacuation of vehicles and personnel.

(4) Avoid defueling helicopter near drainage ditches or low places where combustible mixtures may accumulate.

(5) Helicopter will not be defueled when an electrical storm is in the immediate area.

(6) Position defueling unit as far away from helicopter as hose will permit, up wind and in a position so that it may be driven or towed away from the area in event of an emergency.

(7) All venting doors on defueling unit shall be open.

(8) Discharge static electricity from self before handling or touching metal in vapor area.

(9) A static ground cable shall be connected from servicing unit to grounding stake and from helicopter to grounding stake.

WARNING

A static ground shall be provided for all methods used in defueling helicopter.

(10) A cable shall be connected from helicopter to servicing unit.

(11) Ground fuel nozzle to helicopter.

(12) All operating equipment, ground power plants, ground heaters, air compressors, etc., which are not required in defueling operation will be shut down and moved away from the helicopter.

(13) All helicopter electrical power shall be OFF.

Note

If power is required, turn battery switch ON prior to defueling operation.

(14) Personnel shall not be allowed to remain in helicopter unless required for defueling.

(15) The area shall be equipped with at least one fully charged, 50 pound CO_2 fire extinguisher equipped with an extension assembly.

(16) Access to fire extinguishers on vehicles will not be obstructed.

(17) Visually check hose for breaks or worn spots before starting defueling.

(18) The area shall be 500 feet from any radar.

(19) The helicopter shall be 100 feet from any building or smoking area.

(20) No other aircraft shall be allowed to operate under its own power within 100 feet of the defueling area.

(21) Avoid contact or inhalation of fuel. When contact cannot be avoided, wash skin with mild soap and water.

(22) All equipment (other than defueling equipment) or other sources of ignition shall be kept outside the area.

(23) Use caution when placing defueler hose in fuel cell to prevent damage to fuel cell or components mounted within the cell.

(24) In the event of a major spillage of fuel, all ground powered equipment will be shut down. All personnel will leave the vicinity and be positioned around the aircraft to prevent any powered equipment or sources of possible ignition from entering the area. The fire department will be notified (if available) and take action to render the area safe prior to moving aircraft or equipment. In the event of fire, every effort will be made to move aircraft and servicing unit to a safe place. Large fuel spills may be blanketed with foam or washed away with water and allowed to dry or evaporate before area is used again.

CAUTION

If fuel cells are purged for any reason, avoid build-up of pressure in the fuel cell. There should be no measurable build-up of pressure in the fuel cell during purging operations.

Note

Open sump and boost pump drains to remove residual fuel after defueling operations.

c. Remove passenger seat upholstery.

d. Remove center panel of seat support and panel from seatback. Remove coverplate on deck aft of passenger seat for access to the upper tank unit.

e. Remove screws securing filler cap, and adapter assembly (28, figure 7-15). Disconnect fuel supply hose at union (7), disconnect hose (27) at fitting (26) at top of fuel cell (52). Access to hose in through filler opening.

f. Remove panel from fuel compartment located on right side, above the filler cap. Remove screws and washers attaching fittings (3 and 26) or flange (65, figure 7-15, detail D) to top of fuel cell.

g. Disconnect electrical connections from boost pumps, (33, 42) and tank indicating units (32, 34). Remove bolts (49) and washers (46), securing the boost pumps to bottom of fuel cell. Lower the forward pump (42) and disconnect hose assembly (41) from pump check valve (40). Remove the aft pump (33) by feeding the hose assemblies (41) through pump mount opening.

Note

On helicopters 914 through 2211, loosen clamp (53) between fuel supply hose (1) and hose (27) before removing pump (33) from fuel cell. (See figure 7-15 detail A.)

h. Remove screws (37) and washers (38) attaching the lower indicating unit (34) and remove unit.

i. Disconnect wiring from solenoid drain valve (39). Remove bolts and washers attaching valve to fuel cell, remove valve, leaving hose (27) attached.

j. Remove coverplate located on deck aft of passenger seat and remove screws (30) with washers (31) securing upper tank indicating unit (32) to top of fuel cell. Remove indicating unit.

k. Collapse fuel cell (24) and remove nylon cord attaching cell to structure. Remove cell through the seat opening.

7-73. INSPECTION, STORAGE AND HANDLING – FUEL CELL.

a. Inspect fuel cell immediately prior to installation for damage which may have occurred during crating or removal from shipping container.

b. Inspect fuel cell for leaks after installation. (Refer to paragraph 7-76.)

c. Store fuel cells in original shipping containers at room temperature. Do not store fuel cells where they will be subjected to heat or extremes of humidity.

d. Handle fuel cells carefully to avoid damage. Observe the following precautions:

(1) Leave fuel cells in original shipping containers until ready to install in helicopter.

(2) Do not drag cells or pick up by fittings. Transport cells on carts. If a cell must be transported outside installation area, place it in original shipping container.

(3) Do not handle cell with sharp pointed tools.

(4) Do not place cells on any surface with sharp projections which could damage cell.

(5) Do not stack cells except in original shipping containers.

(6) Do not handle cells when they are too cold to be flexible.

(7) Do not allow cells to remain in any strong light any longer than absolutely necessary. Do not allow light bulbs to contact cell. Fluorescent inspection lights are recommended for use in fuel cells.

7-74. CLEANING INSTRUCTIONS – FUEL CELL. Bladder fuel cell which may have accumulated heavy fungus growth due to contaminated fuel may require the following recommended procedures.

Note

Bladder fuel cell construction used in the Bell Jet Ranger has buna coated fabric inner plies. This buna rubber may be attacked to some degree by micro organism action. The degree of attack is very minor.

a. For fuel cell removal procedures, refer to paragraph 7-72.

b. The presence of fungus in the fuel cell is usually caused by improper servicing and storage of jet fuels. To help alleviate the problem of fungus in the cells, suitable filters and water traps should be used in the fuel storage tank complex and servicing equipment.

Note

A fuel additive meeting the requirement of specification MIL-I-27686 and approved by the FAA as PFA-55MB is recommended to be added routinely to the helicopter fuel cell while refueling is being accomplished. This is the same as the anti-icing additive recommended in the 206 Flight Manual. (Phillips product distributed as "Prist" meets this requirement.) Usually one treatment of PFA-55MB is adequate to kill the bacteria and regrowth in the fuel cell for some time.

c. If evidence of fungus is present in the fuel cell, contamination usually is present in the fuel filter and it should be thoroughly cleaned or replaced.

d. Remove all fungus growth from fuel cell by hand or with a soft scrub brush using warm or hot water.

CAUTION

If hot water is used to clean fuel cell, it is recommended that the temperature of the hot water be limited to 160°F (71°C). Hotter water constitutes a hazard to personnel.

CAUTION

Do NOT use soaps or strong detergents when cleaning fuel cell. Certain powerful detergents are detrimental to the buna type rubber and soaps can react with fuel to form a compound which tends to plug fuel filters.

e. When fungus is observed in fuel cell area, wipe the cell clean with cloths moistened with denatured ethyl alcohol (item 119, table 1-1). Burn wiping cloths after cleaning to destroy fungus.

CAUTION

Under NO circumstances should methyl-ethyl-ketone or similar solvents be used for cleaning fuel cell.

f. Jet fuels may be used for cleaning fuel cell because of one advantage, that being, they are oily and assist in protecting the cell's inner liner against aging if the cell remains out of service for several weeks without fuel.

CAUTION

Under NO circumstances should alcohol in any concentration be used in cleaning fuel cell because of its potentially bad effects on the nylon barrier. Alcohol is a solvent for the barrier and it can penetrate the thin fabric inner liner and possible cause blistering and loss of adhesion.

7-75. REPAIR – FUEL CELL.

a. Field repairs are permitted on the fuel cell in all areas except any radius, any fitting area, on to any cut or tear longer than one inch. Cells with damage beyond these limits should be returned for repair to the fuel cell manufacturer at one of the addresses listed in the next paragraph.

b. Inspect fuel cell to determine the manufacturer (marked on the fuel cell). A repair kit, complete with all materials and instructions for making field repairs, is available from the respective cell manufacturer.

(1) Order repair kit, number RK-30S, from Uniroyal Inc., 312 N. Hill Street, Mishawaka, Indiana 46544.

(2) Order repair kit, number SK-2108-2, from Firestone Coated Fabrics Co., Division of Firestone Tire and Rubber Co., 1200 Firestone Parkway, Akron, Ohio 44317.

7-76. INSTALLATION – FUEL CELL.

CAUTION

Inspect fuel cell cavity for foreign objects before installation of fuel cell. Exercise extreme caution to preclude dropping of tools, hardware, etc. in the fuel cell cavity or fuel cell. Ensure that all sharp edges, corners and rivet heads are protected with tape, (item 1, table 1-1) and/or chafing strips. Proseal is permissible.

CAUTION

Do not fold a cold fuel cell. Folding may crack or damage a cold cell. Heat lamps may be used to warm the cell prior to folding. (Heat for approximately 2 hours, do not exceed 125°F (52°C).

a. Manufacture a work aid, consisting of a section of broom handle or equivalent approximately 5 feet long. Round off both ends and fasten a piece of sponge rubber to one end, to aid in installation of fuel cells.

b. Warm fuel cell as required. (Refer to preceding second caution statement.)

c. Insert collapsed fuel cell through the seatback opening and position the forward section of the cell under the seat.

d. Lace the bottom aft side of the fuel cell to the fuselage structure using nylon cord (item 99, table 1-1). Tie nylon cord to the right aft lower structure fitting and lace through seven delta hangers and fittings. Secure end of nylon cord on left side.

e. Lace the top aft side of the fuel cell to the fuselage structure using nylon cord (item 99, table 1-1). Tie nylon cord to right top structure fitting and lace through seven delta hangers and fittings. Secure end of nylon cord on left side.

f. On helicopters 661 through 671, 716 through 2211, and helicopters showing compliance with Technical Bulletin 206-01-74-1 , Installation of Abrasion Protective Material and Fillers in Fuel Cell Cavity, etc., seal back wall of cell to structure. Using work aid carefully rub cell wall to adhere to the pile tape bonded to structure.

g. Lace the top forward side of the fuel cell to fuselage structure using nylon cord (item 99, table 1-1). Tie nylon cord to right forward structure fitting and lace through eight delta hangers and fittings. Loosely tie off nylon cord at last structure fitting. Allow sufficient slack to provide hand room for installation of fittings on top of cell.

h. Position a new packing (2, figure 7-15) between forward fitting (3) and mating cell fitting. Secure fittings and screws (6) and washers (5).

i. Position a new packing (4) on union (7) and install in fitting (3). Install fuel supply tube (8) and secure at union (7) and cross (11) and valve assembly (12).

j. Position a new packing between tank vent fitting (26) and mating cell fitting. Position vent fitting

flange over vent fitting (26) and align holes. Secure fittings and flange with four screws and washers.

k. Install and connect vent tubes (24 and 25) to tank vent fitting (26). If union (29) or filter (69) was removed ensure a new packing is installed prior to attaching vent tube (25). Check lower exposed portion of vent tube (24) for installation of hose (55). If hose or vent tube is to be replaced accomplish the following:

(1) Trim sealant from vent tube and hose at upper baggage compartment floor line and at external skin line. Remove clamps, and disconnect and remove vent tube and hose.

(2) Temporarily install vent tube with 45 degree scarf facing forward. (See figure 7-15, detail B.) Verify that vent tube protrudes 2.75 to 2.95 inches below skin line. Mark circumference of tube 0.12 inch above baggage compartment floor line and 0.12 inch below external skin line. Remove vent tube from helicopter.

(3) Cut hose to required length and ensure that ends of hose will be parallel to floor and external skin lines. If necessary reinstall to verify correct fit and that hose will protrude 0.12 inch at both areas.

(4) Install vent tube, hose, and clamps, and secure in their correct location. Seal vent tube and hose to baggage compartment floor line and external skin line with sealant (item 7, table 1-1).

(5) On helicopters 914 through 2211, drill a 0.25 inch hole on aft side of vent tube 1.0 inch above end of scarf cut. (See figure 7-15, detail B.)

l. Position upper tank unit (32) with new gasket in opening on deck aft of passenger seat with float and arm positioned to the right. Install five screws (30) and washers (31) to secure upper tank unit. Connect electrical leads. (Refer to Section XIII.) Install cover plate and secure.

m. Check mating flange of filler adapter (28, figure 7-15) for removal of protective finish so as to provide a good electrical bond. Position filler adapter over opening on right side of helicopter with a new packing and align holes in adapter with holes in mating cell fitting. Secure filler adapter with eight screws and washers. Torque screws to 50 plus or minus 5 inch-pounds.

n. Tighten top forward side of fuel cell nylon cord lacing and secure. (Refer to subparagraph g.) Use work aid through tank access opening and push fuel cell against forward and side walls of fuel cell cavity to engage hook and pile (Velcro) tape.

o. Lace the top forward eight delta hangers and the three delta hangers on the left and right forward sides of fuel cell to structure fittings with nylon cord (item 99, table 1-1). Tie an appropriate length of nylon cord to a corner structure fitting and lace through delta hangers and fittings for each area and secure. Use work aid to push cell against cell cavity walls and corners.

p. Position a new packing on fuel solenoid drain valve (39, figure 7-15). Install drain valve over opening in bottom of fuel cell with vent hose (27) attached. Secure with four bolts and washers. Safety bolt heads in pairs with 0.032 inch lockwire (item 19, table 1-1). Attach and secure top end of vent hose (27) to tank vent fitting (26). Connect electrical wiring for fuel solenoid drain valve. (Refer to Section XIII.)

q. Install front and rear fuel pumps (42 and 33). (Refer to paragraph 7-85.)

Note

On helicopters 661 through 671 and 716 through 2058, install two clamps (53) between fuel supply hose (1) and vent hose (27). (See figure 7-15, view A-A.)

r. Install lower tank unit (34) with doubler and new gasket in bottom of fuel cell with indicating arm forward. Secure with five screws (36) and washers (35).

s. Inspect fuel cell installation for security.

t. Connect the battery and close fuel shut-off valve.

u. Perform leak test on fuel cell as follows:

(1) Install a cap fitting on union (29) and connect air source to top of fitting (26).

Note

Use regulated low pressure, filtered, compressed air source, an accurate pressure gage and a shut-off valve.

(2) Apply pressure until gage indicates 1.0 psig. Shut-off air source. The cell should hold this pressure for 15 minutes.

CAUTION

Do not apply over the recommended pressure as damage to cell and structure may result. Use a mild soapsuds solution to locate leaks.

(3) Locate and correct any leakage indicated. Repeat test if leaks are found.

(4) Remove test equipment, remove cap from union (29) and connect tubes (24 and 25).

v. Install access covers and seat cushions.

7-77. FUEL SHUT-OFF VALVE.

A motor operated shut-off valve (12, figure 7-15), installed in the main fuel supply line, is located in the fuel compartment above the fuel filler cap. The valve is electrically controlled by an ON-OFF switch located on the instrument panel and protected by a circuit breaker located in the overhead console panel. In the event of electrical failure the valve will remain in the position selected before failure.

7-78. REMOVAL – SHUT-OFF VALVE.

a. Remove coverplate above the filler cap, pull circuit breaker and disconnect electrical connector on the valve.

b. Disconnect tubes (8 and 23, figure 7-15).

c. Remove bolts (16) washers (10 and 15) and nuts (9), securing valve (12) to bracket (14).

7-79. INSTALLATION – SHUT-OFF VALVE.

a. Position cross (11), valve (12) and connector (44) on bracket (14), and install bolts (16), washers (10 and 15) and nuts (9).

b. Connect tube assemblies (8 and 23) and electrical connector.

c. Install coverplate.

7-80. FUEL PUMP AND FILTER ASSEMBLY.

7-81. DESCRIPTION. The engine fuel pump and filter assembly are integral units mounted on the aft end of the engine gearbox. Fuel enters the engine fuel system at the inlet port of the pump and passes through the filter before entering the gear elements of the pump. Filter draining is accomplished by a drain valve (31, figure 7-13) (not a part of the basic engine), mounted on the filter housing. The fuel filter is monitored by a pressure differential switch (43) located on the lower firewall and connected electrically to the fuel filter caution light. Refer to Allison Operation and Maintenance Manual for detailed maintenance instructions.

7-82. FUEL (BOOST) PUMP.

7-83. DESCRIPTION. Two electrically operated fuel (boost) pumps (33, 42, figure 7-15) are located in the bottom of the fuel cell. The pumps are interconnected and furnish fuel through one supply line. The pumps are equipped with check valve, pump drain port, seal drain port, intake screen, and pump operating pressure switch located in the discharge port of the pump. The pumps are controlled by circuit breakers located in the overhead console. The fuel pump motor/impeller cartridge can be removed without removing the fuel boost pump assembly. (Refer to paragraph 7-85B for replacement of motor/impeller cartridge.)

7-84. REMOVAL – FUEL (BOOST) PUMP.

WARNING

All defueling operations should be performed in an area where fire hazards are reduced to a minimum. Observe all warning and caution statements of paragraph 7-72.

a. Disconnect battery and defuel helicopter with a 1.5 degree nose down attitude.

b. Disconnect electrical wiring to front or rear fuel pumps (42 or 33, figure 7-15). (Refer to Section XIII .)

c. Remove eight bolts (49, figure 7-15) with seven washers (46) and ground lead from fuel pump.

d. Lower fuel pump (33 or 42) and disconnect attached fuel supply hose (1) or interconnect hose (41), as applicable and remove fuel pump.

e. Cover fuel cell opening to prevent entrance of foreign material.

f. Remove check valve (43), plug (50), and pressure switch (51). Discard all packings (44, 45, 47 and 48).

7-85. INSTALLATION - FUEL (BOOST) PUMP.

a. Prior to installation of rear or front fuel pumps (33 or 42, figure 7-15) modify each fuel pump not previously modified in accordance with figure 7-4A, as applicable for the fuel pump part number. Modification of fuel pumps in accordance with figure 7-4A will improve fuel pump performance and prevent ice clogging of fuel pump inlet screen(s) when fuel anti-icing additives are not used.

b. Lubricate packings (44, 47 and 48) with fuel.

c. Position packing (44) on check valve (43) and install. Torque check valve (43) to a maximum of 40 inch-pounds.

d. Remove protective covering from fuel cell openings.

e. Position a new gasket (45) on rear fuel pump (33) and install in fuel cell opening. Connect tee fitting, fuel supply hose (1) and interconnect hose to rear fuel pump. On helicopters 914 and subsequent install two clamps (53) if removed. Secure fuel pump with eight bolts (49) and washers (46). Torque bolts (49) to 45 to 55 inch-pounds.

Note

Bolt heads and external flange of fuel pumps should be clean to provide a good electrical bond. Omit one washer and install fuel pump ground wire.

f. Position a new gasket (45) on front fuel pump (42) and install in fuel cell opening. Connect interconnect hose (41) to check valve (40) on front

fuel pump. Secure fuel pump with eight bolts (49) and washers (48). Torque bolts (49) 45 to 55 inch-pounds. Observe preceding note.

g. Install plug (50) and pressure switch (51) in Globe and Lear Siegler fuel pumps as follows:

(1) Globe boost pumps. These pumps contain one external fuel drain port in the mounting flange. When installing a Globe pump, plug external fuel drain port with a new packing (48) and plug (50).

(2) Lear Siegler boost pump. These pumps contain two external ports in the mounting flange. When installing a Lear Siegler pump, plug the fuel drain port with a new packing (48) and plug (50).

Note

No plug is required in Lear Siegler fuel pumps at seal drain port.

(3) Install pressure switch (51) with a new packing (47). Torque pressure switch to 40 inch-pounds.

h. Connect electrical wiring to front and rear fuel pumps (42 and 33). (Refer to Section XIII .)

i. Inspect installation for security.

j. Connect the battery and close fuel shut-off valve.

k. Perform leak test on fuel cell. (Refer to paragraph 7-76 u.)

l. Bleed trapped air from both boost pumps after refueling by removing drain plug and draining a small amount of fuel from cell.

m. Safety plug (50) and pressure switch (51) together and the two screws securing pump to housing with 0.032 inch lockwire (item 19). (See figure 7-15 , view A-A.)

n. Check boost pump for minimum pressure as follows:

(1) Move helicopter to adequate tie-down facilities and secure for ground run.

(2) Operate helicopter at flat pitch and 100 percent rotor speed, with generator ON.

(3) Check each individual pump with the other inoperative. Pump pressure should be 8 psig minimum. Helicopters 914 and subsequent pump pressure should be 4 psig minimum.

Note

Fuel pressure with both pumps in operation is not significant as long as each pump by itself meets requirements in step (3) above.

7-85A. FUEL BOOST PUMP — P/N 206-062-673-001.

7-85B. REPLACEMENT — FUEL PUMP CARTRIDGE. P/N 1C27-4 OR 2C27-1.

a. Disconnect battery and/or external power supply.

b. Drain fuel from cell.

c. Disconnect electrical wiring to front or rear fuel pump (42 or 33, figure 7-15). (Refer to Section XIII .)

d. Remove drain plug (50) and packing (48).

e. Remove retaining ring.

f. Install slide hammer with 0.3125-24 threads in pump drain boss and remove motor/impeller cartridge.

g. Clean cartridge hole and retaining ring.

h. Lubricate packing on motor/impeller cartridge and the sides of the cartridge hole in the mounting flange casting with lubricating oil (item 20).

Note

Align arrows on motor/impeller cartridge and on mounting flange.

i. Install motor-impeller cartridge in flange with arrows aligned making sure that it is properly seated and that the retaining ring groove is not obstructed.

CAUTION

Do not force. Eccentric cartridge design requires alignment arrows to be within plus or minus 3 degrees to be properly installed.

j. Install retaining ring.

k. Install drain plug (50), new packing (48), and secure with 0.032 inch lockwire (item 19) as shown in view C-C.

CAUTION

Do not overtorque positive (+) lead terminal.

l. Connect electrical leads to the motor/impeller cartridge.

m. Partially fill fuel cell and check for external leaks.

n. Connect battery or external power and turn fuel pump ON and check for proper gage pressure. (Refer to paragraph 7-76 .)

7-85C. REPLACEMENT OF CANISTER FUEL BOOST PUMP ASSEMBLY P/N 206-062-681-101.

a. Prepare helicopter for maintenance. Disconnect battery and/or external power supply. Pull circuit breakers for forward and aft fuel boost pumps on overhead instrument panel.

b. Defuel helicopter. (Refer to paragraph 1-20B.)

c. Remove existing forward and aft boost pumps from fuel cell and disassemble. Discard packings, retain drain plugs, pressure switches, check valves, hoses, bolts, and washers. Refer to figure 7-16A , sheets 1 and 2 paragraph 7-84 .

d. Inspect interior of fuel cell for cleanliness by looking through fuel filler cap and adapter opening with a flashlight. Clean cell if evidence of fungus, sand or other contaminates are evident. (Reer to paragraph 7-23 .)

e. Assemble forward and aft boost pumps, P/N 206-062-681-101, as shown in figure 7-16A sheet 1 as follows:

Note

Wet all packings with fuel prior to assembly.

(1) Place new packing, P/N MS29512-04, on each drain plug, P/N AN814-4DL, and install in center boss of each cartridge.

(2) Place new packing, P/N MS29512-10, on each pressure switch and install in the exterior port in each pump housing. Torque switches to 40 inch-pounds maximum.

(3) Place new packing, P/N MS29512-10, on each check valve, P/N P49-389, and install in the internal port in each pump housing.

(4) Place new packing, P/N MS29513-243, in flange groove on each pump housing.

f. Select one boost pump for the aft position and install tee fitting, P/N 110-089-2D, onto check valve. Orient tee fitting to point toward forward tank opening when pump is held at aft cell opening.

g. Position aft boost pump to fuel cell opening and connect hose assemblies, P/N 70-010V000A311 and 70-010V000V142, to tee fitting. Ensure the -142 hose will reach cell opening for the forward pump and will not be in tension.

h. Position remaining boost pump into forward cell opening and connect hose assembly, P/N 70-010V000V142, to check valve.

i. Position forward boost pump into cell opening as shown in figure 7-16A, sheet 2. Secure pump with six bolts, P/N AN4H5A, and washers, P/N AN960PD416L, at locations that do not retain ground wire terminals or clamp. Torque bolts 45 to 55 inch pounds.

j. Repeat step i for installation of aft boost pump as shown in figure 7-16A , sheet 2.

k. Safety pressure switches and drain plugs as shown in figure 7-16A , sheet 2 with lockwire, 0.032 inch diameter (item 19, table 1-1).

l. Connect pressure switch wires E24C22 (forward pump) and E24C22 (aft pump) as shown in figure 7-16A and Section XIII.

m. Using splices, P/N M81714-11-16A, and contacts, P/N M39029-01-14-16, connect wiring furnished with the boost pumps to existing wiring harness as shown in Section XIII . Allow sufficient

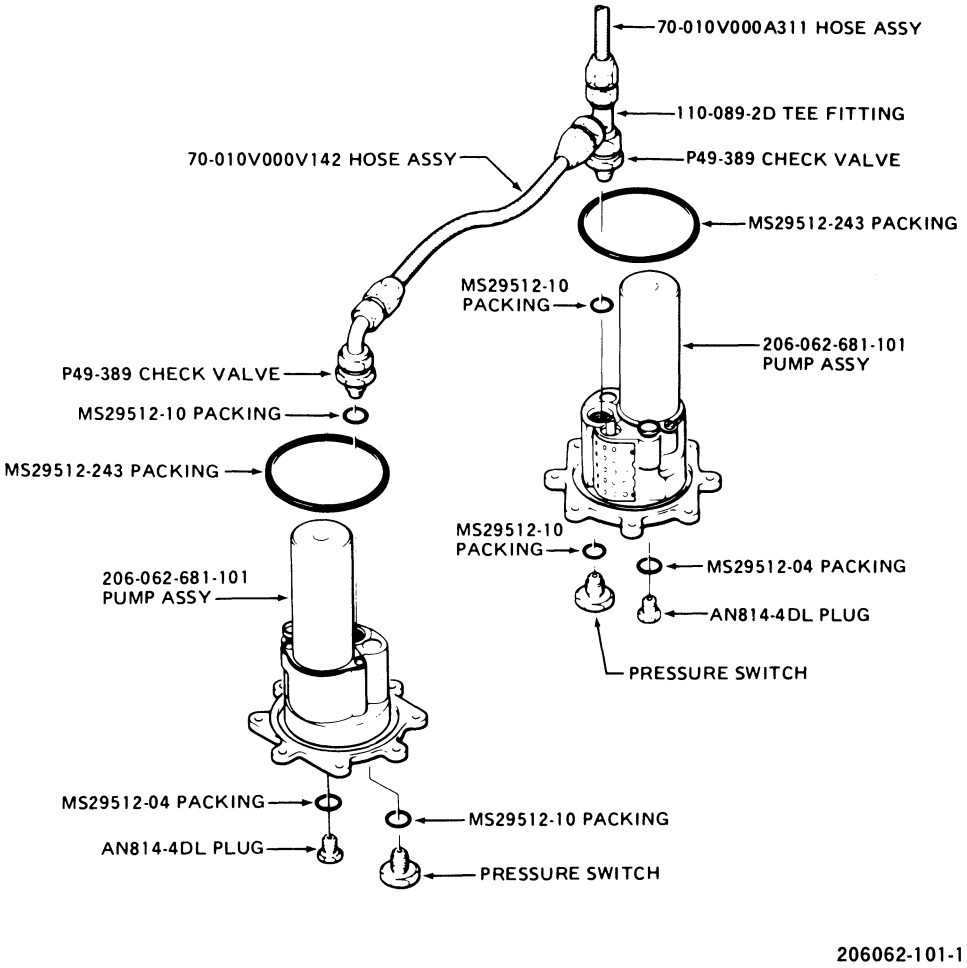

Figure 7-16A. Installation of Canister Type Fuel Boost Pump P/N206-062-681-101 (Sheet 1 of 2)

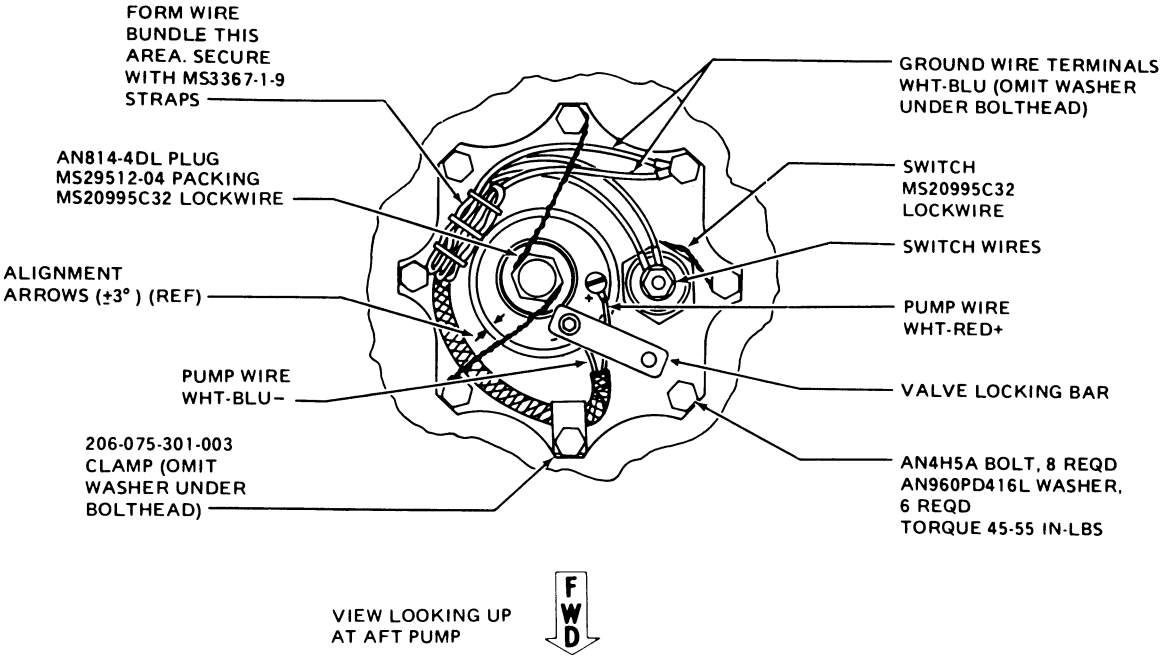

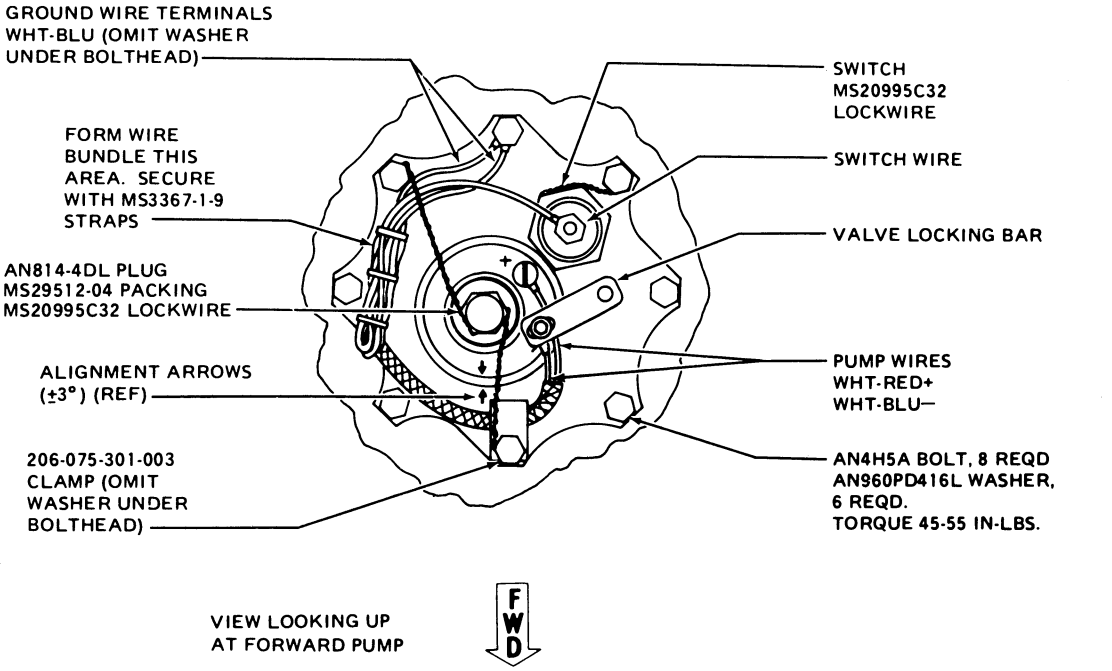

Figure 7-16A. Installation of Canister Type Fuel Boost Pump P/N206-062-681-101 (Sheet 2 of 2)

slack to form small wire bundle at the pumps as shown in figure 7-16A , sheet 2.

n. Secure each set of pump wires WHT-RED + and WHT-BLU-, with clamps, P/N 206-075-301-003, and bolts, P/N AN4H5A, as shown in figure 7-16A , sheet 2.

o. Secure each set of ground wires No. Q2A18N and WHT-BLU- with a bolt, P/N AN4H5A, as shown in figure 7-16A , sheet 2.

p. Form loose wiring into small tight bundles as shown in figure 7-16A , sheet 2, and secure with tie straps, P/N MS3367-1-9. Trim straps as required.

q. Ensure all bolts, switches, terminals and plugs are torqued, wiring correctly connected and adequately secured.

r. Refuel helicopter. (Refer to paragraph 1-20A.)

s. Prepare helicopter for ground run and operational check of fuel boost pumps as follows:

(1) Connect battery and/or auxiliary power unit.

(2) Operate helicopter at flat collective pitch, 100% Nr, with generator ON.

(3) Check each individual boost pump with the other inoperative. Minimum pump pressure should be 8 PSIG (S/N 4 through 913) or 5 PSIG (S/N 4 and subsequent). Ensure caution light illuminates when pump is inoperative.

Note

Fuel pressure with both boost pumps in operation is not significant, provided each pump meets the minimum pressure requirements stated in preceeding step (3). Helicopter S/N 4 through 913 may have the fuel pressure indicators red and green arcs remarked per T.B. 206-08-74-1 , dated 5-17-74.

t. Prepare helicopter for flight operation.

7-85D. REPLACEMENT OF FUEL PUMP CARTRIDGE P/N 1C27-4 OR 2C27-1.

a. Prepare helicopter for maintenance. Disconnect battery supply and/or external power supply. Pull circuit breakers for forward and aft fuel boost pumps on overhead instrument panel.

b. Remove Allen screw from pump assembly valve locking bar as shown in figure 7-16A , sheet 2. Rotate bar clear of cartridge.

Note

Removal of Allen screw will disconnect WHT-BLU- (negative) ground lead and will allow valve locking bar to extend, closing off fuel supply to cartridge.

c. Disconnect WHT-RED+ (positive) lead from cartridge terminal and move wiring clear of cartridge area.

d. Remove drain plug, P/N AN814-4DL, from cartridge center boss and allow trapped fuel to drain.

e. Remove retaining ring securing cartridge in pump housing.

f. Install special cartridge removal tool, P/N E2-10-1, in cartridge drain plug boss and secure with check nut. Using weight, impact cartridge from pump housing. Remove tool from cartridge.

Note

For cartridge repair, return to:
Airborne, Aviation Products Group
711 Taylor Street
Elyria, Ohio 44035
Phone: (216) 323-4676
Telex: 24-3414

g. Clean all foreign matter from cartridge bore and retaining ring groove in pump housing and from retaining ring.

h. Lubricate packings, P/N V747-75-2-033 and V747-75-2-034, (furnished with new cartridge) with fuel.

i. Using hand pressure, install cartridge in pump housing with arrows aligned on flanges

(within + 3 degrees). Special cartridge removal tool, P/N E2-10-1, may be used as a work aid during installation. Do not impact cartridge for damage to parts may result.

j. Secure cartridge in pump housing with retaining ring.

k. Install drain plug in cartridge boss with new packing, P/N MS29512-04. Double safety plug to adjacent mounting bolts with lockwire, 0.032 inch diameter (item 19, table 1-1).

l. Rotate valve locking bar over cartridge and in line with minus (-) terminal. Insert WHT-BLU- (negative) lead terminal under bar and secure both with Allen screw.

m. Connect WHT-RED + (positive) lead terminal to + terminal on cartridge, do not overtorque.

n. Perform fuel boost pump operational check.

(1) Ensure both boost pumps are covered with fuel. Refuel helicopter, as required.

(2) Connect battery and/or external power supply.

(3) Turn battery switch ON and close fuel boost pump circuit breakers. Check fuel gage for adequate pressure and caution lights illuminate.

(4) Turn battery switch OFF. Check exterior of boost pumps for evidence of leakage.

p. Prepare helicopter for ground run and operational check of fuel boost pumps as follows:

(1) Connect battery and/or auxiliary power unit.

(2) Operate helicopter at flat collective pitch, 100% Nr, with generator ON.

(3) Check each individual boost pump with the other inoperative. Minimum pump pressure should be 8 PSIG (S/N 4 through 913) or 5 PSIG (S/N 914 and subsequent). Ensure caution light illuminates when pump is inoperative.

Note

Fuel pressure with both boost pumps in operation is not significant, provided each pump meets the minimum pressure requirements stated in preceeding step (3). Helicopter S/N 4 through 913 may have the fuel pressure indicators red and green arcs remarked per T.B. 206-08-74-1 , dated 5-17-74.

7-85E. REPLACEMENT OF CANISTER FUEL BOOST ASSEMBLY P/N 206-062-681-103.

The instructions for replacement of canister fuel boost pumps are identical to paragraph 7-85C except refer to figure 7-16B sheets 1 and 2.

7-85F. REPLACEMENT OF FUEL BOOST PUMP CARTRIDGE IN 206-062-681-103 PUMP ASSEMBLY CANISTER TYPE.

a. Prepare helicopter for maintenance. Disconnect battery and/or external power supply. Pull circuit breakers for forward and aft fuel boost pumps on overhead instrument panel.

b. Disconnect WHT-RED + (positive) and WHT-BLU- (negative) leads from cartridge and move wiring clear of cartridge area. (Refer to figure 7-16B, sheet 2.)

c. Remove lockwire, three bolts and washers (one at handle, two approximately 180 degrees opposite) securing cartridge in pump housing.

d. Pull cartridge handle and remove cartridge from pump housing. The handle contains a cam lever foot that provides a mechanical advantage to reduce friction force of packings when removing cartridge.

Note

For cartridge repair, return to:
TRW Globe Motors
2275 Stanley Avenue
Dayton, Ohio 45404
Phone: (513)-228-3171
TWX: 810-459-1642
Telex: 288224

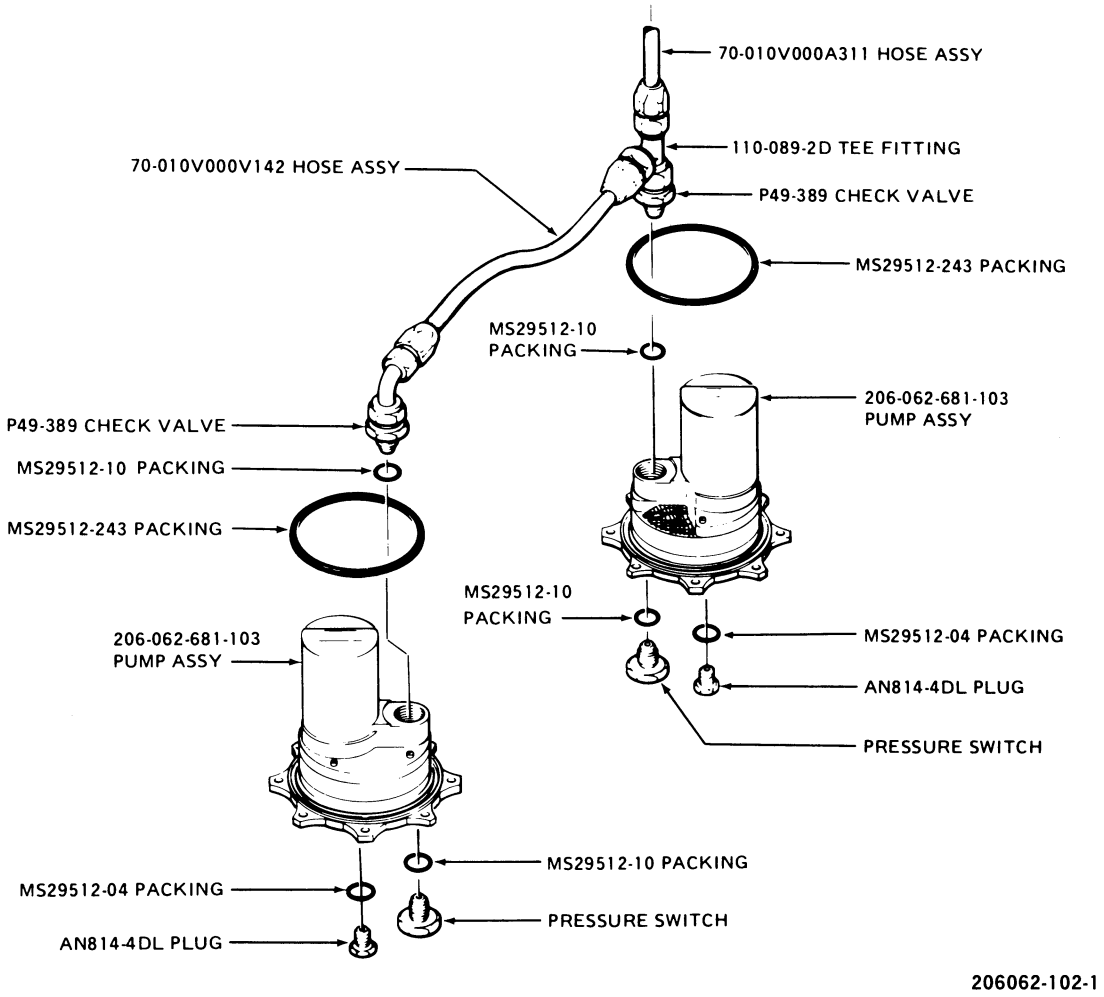

Figure 7-16B. Installation of Canister Type Fuel Boost Pump P/N206-062-681-103 (Sheet 1 of 2)

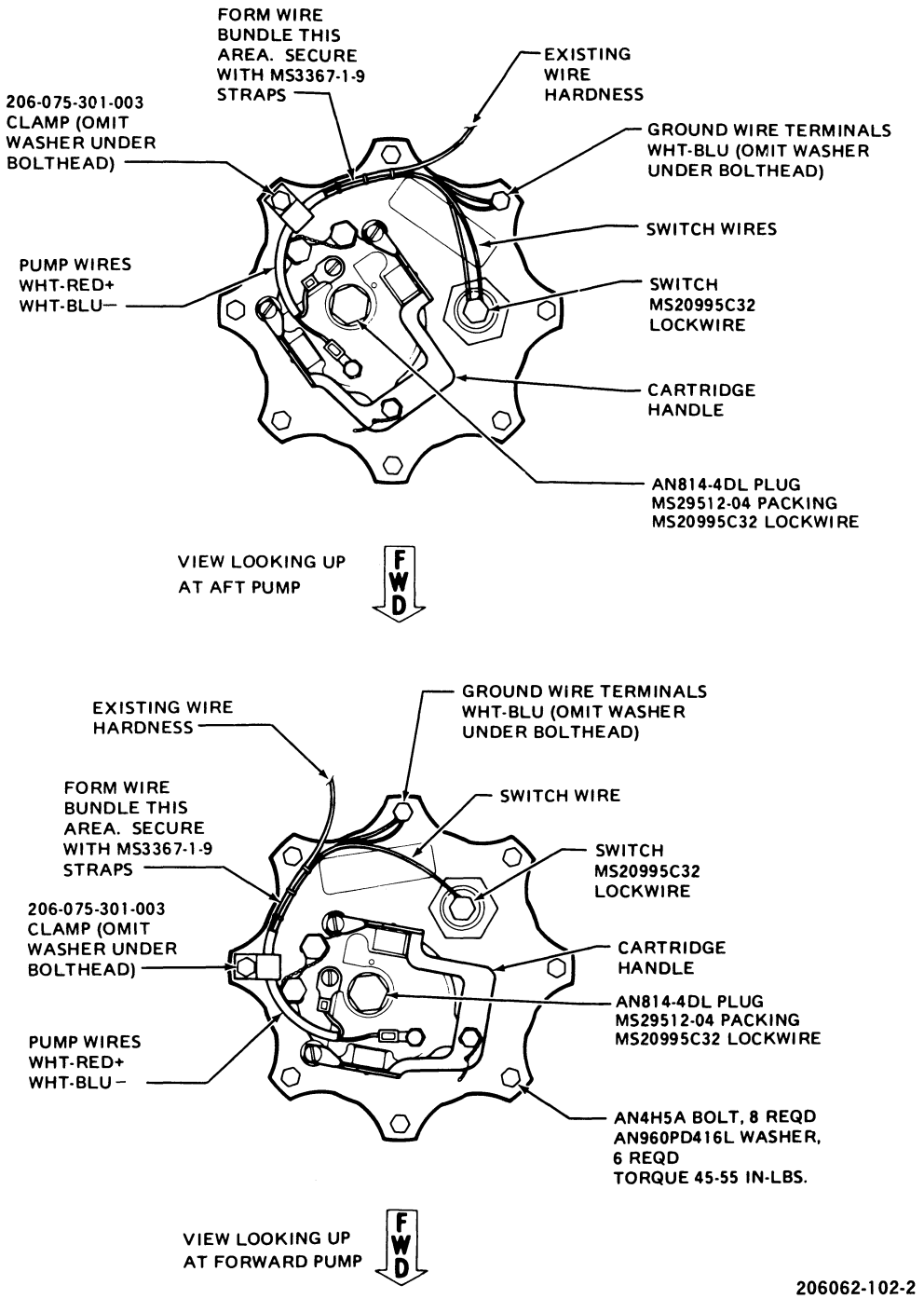

Figure 7-16B. Installation of Canister Type Fuel Boost Pump P/N206-062-681-103 (Sheet 2 of 2)

e. Remove drain plug, P/N AN814-4DL, from cartridge center boss and discard packing. Install plug in replacement cartridge with a new packing, P/N MS29512-04.

f. Clean all foreign matter from cartridge bore in pump housing.

g. Lubricate packings, P/N MS29513-136 and MS29513-033, (furnished with new cartridge) with fuel.

h. Install cartridge in pump housing with the two bolt holes in cartridge flange and housing aligned. Fully seat cartridge in housing with handle closed. Secure cartridge in housing with three bolts and washers. Safety boltheads with lockwire, 0.032 inch diameter (item 19, table 1-1) as shown in figure 7-16B , sheet 2.

i. Safety drain plug to an adjacent bolthead with lockwire 0.032 inch diameter (item 19, table 1-1

j. Connect WHT-RED + (positive) and WHT-BLU- (negative) leads to terminals on cartridge, do not overtorque. (Refer to Section XIII.)

k. Perform fuel boost pump operational check.

(1) Ensure both boost pumps are covered with fuel. Refuel helicopter as required.

(2) Connect battery and/or external power supply.

(3) Turn battery switch on and close fuel boost pump circuit breakers. Check fuel gauge for adequate pressure and caution lights illuminate, refer to paragraph 7-85D step p.

(4) Turn battery switch off. Check exterior of boost pumps for evidence of leakage.

7-86. FUEL QUANTITY — INDICATING UNITS.

7-87. DESCRIPTION. Two float type fuel level transmitting units (32, 34, figure 7-15) are installed in the fuel cell. The lower unit is mounted in the tank bottom and monitors fuel level up to the horizontal surface of the cell, under the seat; the upper unit monitors fuel level in the upper section of the fuel cell, behind the seat, and is mounted to the top of the fuel cell. Both indicating units are connected to a common quantity indicator. Refer to Section X for calibration procedures and troubleshooting.

7-88. REMOVAL — INDICATING UNITS.

WARNING

All defueling operations should be performed in an area where fire hazards are reduced to a minimum. Observe all warning and caution statements of paragraph 7-22 .

a. Disconnect battery and defuel helicopter with a 1.5 degree nose down attitude.

b. Disconnect electrical wiring to upper or lower tank unit (32 or 34, figure 7-15).

c. Remove three screws (30 or 36) and washers (31 or 35) from tank units and remove from fuel cell. Discard gasket.

d. Cover fuel cell opening to prevent entrance of foreign material.

e. Remove five screws (37) and washers (38) from tank unit doubler and separate doubler from tank unit.

7-89. INSTALLATION — INDICATING UNITS.

a. Position new gasket on inside flange of upper or lower tank unit (32 or 34). Install doubler and secure with five screws (37) and washers (38).

b. Remove protective covers from fuel cell openings for tank unit.

c. Insert upper or lower tank units (32 or 34) into fuel cell opening and secure with three screws (30 or 36) and washers (31 or 35).

Note

Position float arm of upper tank unit to the right side of helicopter and lower tank unit float arm forward.

d. Connect electrical wiring to upper and lower tank units (32 or 34). (Refer to Section XIII.)

e. Inspect fuel cell installation for security.

f. Connect the battery and close fuel shut-off valve.

g. Perform leak test on fuel cell. (Refer to paragraph 7-76 u.)

h. Calibrate fuel quantity system. (Refer to Section X.)

7-90. AIRFRAME MOUNTED FUEL FILTER.

Note

Helicopters with TB 206-81-55 incorporated have firewall mounted fuel filter.

7-91. A fuel filter is mounted at right side of engine compartment to filter inlet fuel to engine. It is electrically connected to a caution light in instrument panel.

7-92. MAINTENANCE – AIRFRAME MOUNTED FUEL FILTER (56-2889-016 or -016A).

Note

Filter element must be removed and replaced whenever caution light comes on during engine operation. Replace element at same hourly interval as the engine fuel pump filter or whenever contamination cannot be removed.

a. Remove filter element as follows:

(1) Remove lockwire securing filter bowl to filter valve body.

(2) Using strap wrench, remove filter bowl.

(3) Discard packing and remove element from bowl.

b. Remove contamination and residual water from filter bowl. Remove contamination from filter element.

Note

Use new filter element if contamination cannot be removed or if element is due for time replacement.

c. Install filter element as follows:

(1) Position filter element in filter bowl. Use new packing and tighten bowl until packing contacts filter body.

(2) Mark a vertical line on filter bowl and body.

(3) Using strap wrench tighten bowl to 60 to 90 degrees past mark.

Note

Turning bowl 60 degrees past the reference mark will normally prevent any leakage. If leakage occurs at this point, continue tightening to a maximum of 90 degrees (90 degrees represents 150 inch-pounds).

(4) Safety bowl to filter body with 0.032 inch lockwire (item 19, table 1-1).

(5) Bleed air from fuel system.

(6) Run engine and check for fuel leaks.

CAUTION

Micro switch replacement on filter assembly will change differential pressure. (Refer to Service Letter 206-193.)

7-92A. MAINTENANCE – AIRFRAME MOUNTED FUEL FILTER (306001.)

Note

Filter element must be removed and replaced whenever caution light comes on during engine operation. Replace element at same hourly interval as the engine fuel pump filter or whenever contamination cannot be removed.

a. Remove filter element as follows:

(1) Cut and remove the lockwire securing the filter bowl retainer and drain plug.

(2) Remove drain plug and drain fuel from bowl.

(3) Remove retainer and bowl from filter body.

(4) Remove filter element from the bowl. Discard the two gaskets at each end of the element and the O-ring in the filter element.

b. Remove contamination and residual water from filter bowl. Remove contamination from filter element.

Note

Use new filter element kit if contamination cannot be removed or if element is due for time replacement.

c. Install filter element as follows:

(1) Install new gaskets on each end of filter element with concave side facing element.

(2) Install new O-ring in filter body.

(3) Install filter bowl, element and retainer. Torque retainer to 25 to 50 inch-pounds.

(4) Install drain plug and safety plug and retainer with 0.032 inch lockwire (item 19, table 1-1).

(5) Bleed air from fuel system.

(6) Run engine and check for fuel leaks.

7-93. ENGINE OIL SYSTEM.

7-94. DESCRIPTION. The engine oil system is a dry sump type with an external mounted supply tank and oil cooler located on the top aft section of the fuselage. (See figures 7-17 and 7-18) Oil is supplied by the tank to a gear type pressure and scavenge pump mounted within the accessory drive gearbox. Return oil is routed from the engine oil outlet port to the oil cooler and from the cooler to the tank. The oil tank has a normal capacity of 1.5 U.S. gallons and oil level is checked by a dip stick mounted on the filler cap. The tank provides port openings for engine supply, engine return, vent, oil temperature bulb, oil level sight gage, and self-locking drain valve. Air is supplied to the oil cooler by a blower mounted on the tail rotor drive shaft. Refer to Operation and Maintenance Manual, Allison Publication No. 10W2 for description and maintenance of engine lubrication system.

7-95. REMOVAL – OIL TANK.

a. Remove aft fairing.

b. Open drain valve (10, figure 7-17) by pushing upward on hose (12) and drain oil into a suitable container.

c. Disconnect electrical connection at temperature bulb (8). Remove bulb and packing.

d. Disconnect tube assemblies and drain hoses.

e. Remove drain valve (10).

f. Remove screws (15), washers and nuts securing tank (16) to support (13).

7-96. INSTALLATION – OIL TANK.

a. Install rubber pads on top of tank support (13, figure 7-17). Position mounting flanges of tank (16) over rubber pads and install screws (15), washers and nuts.

CAUTION

Do not overtorque fittings and line B nuts.

b. Install new packing (11) on drain valve (10) (if valve was removed), and install valve in tank (16). Connect drain hoses (12) and (14).

c. Connect vent line (2), oil supply line (17) and return line (6) to tank (16).

d. Install new packing (9) on temperature bulb (8). Install temperature bulb in tank and connect electrical lead to bulb.

e. Install new packing (11), drain valve (10) and hose (12).

f. Check drain valve (10) for closed position and fill oil tank (16) per servicing schedule in Section I. Ensure proper amount and grade of oil is used.

7-97. REMOVAL – OIL COOLER.

a. Cut lockwire on drain plug (21, figure 7-17), remove plug and drain cooler into a suitable container.

b. Remove engine return hose (23) and tank return tube (6).

c. Remove screws, bolts and washers attaching cooler (1) to blower duct (22).

CAUTION

If internal engine failure or metal contamination has occurred which might contaminate cooler, remove and install new cooler after flushing connecting lines, fittings and oil tank.

7-98. REPAIR – OIL COOLER.

Repair of damaged oil coolers is not recommended by the manufacturer. A method of cleaning or flushing a contaminated oil cooler to assure complete removal of all contaminats has not been authorized or approved by the engine manufacturer. Damaged or contaminated oil coolers should be replaced.

7-99. OIL COOLER BY-PASS VALVE FUNCTION TEST.

a. Check function of control valve by submerging valve in water heated to 160°F (71°C) for five minutes. Remove

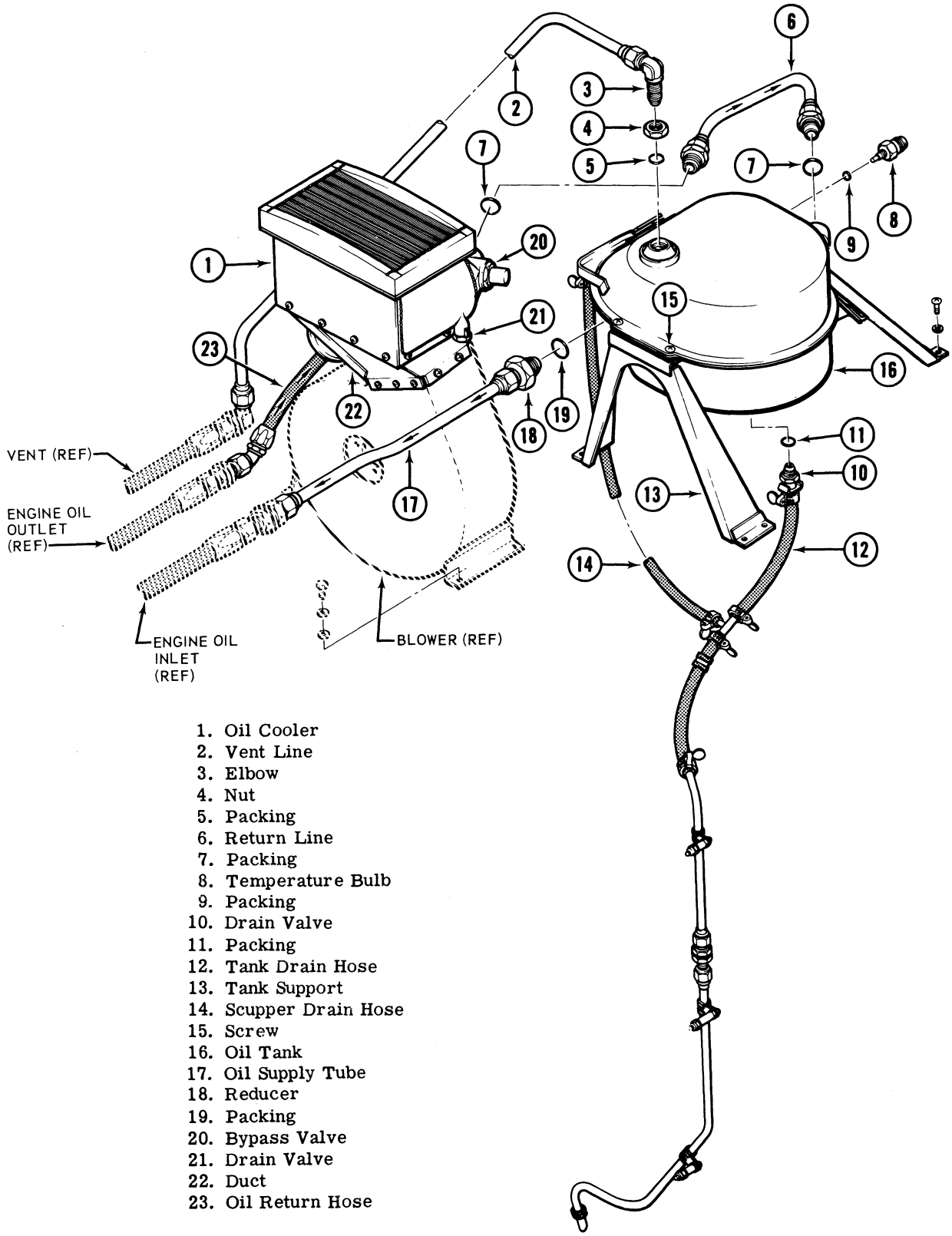

1. Oil Cooler
2. Vent Line
3. Elbow
4. Nut
5. Packing
6. Return Line
7. Packing
8. Temperature Bulb
9. Packing
10. Drain Valve
11. Packing
12. Tank Drain Hose
13. Tank Support
14. Scupper Drain Hose
15. Screw
16. Oil Tank
17. Oil Supply Tube
18. Reducer
19. Packing
20. Bypass Valve
21. Drain Valve
22. Duct
23. Oil Return Hose

206061-5

Figure 7-17. Engine Oil Supply System

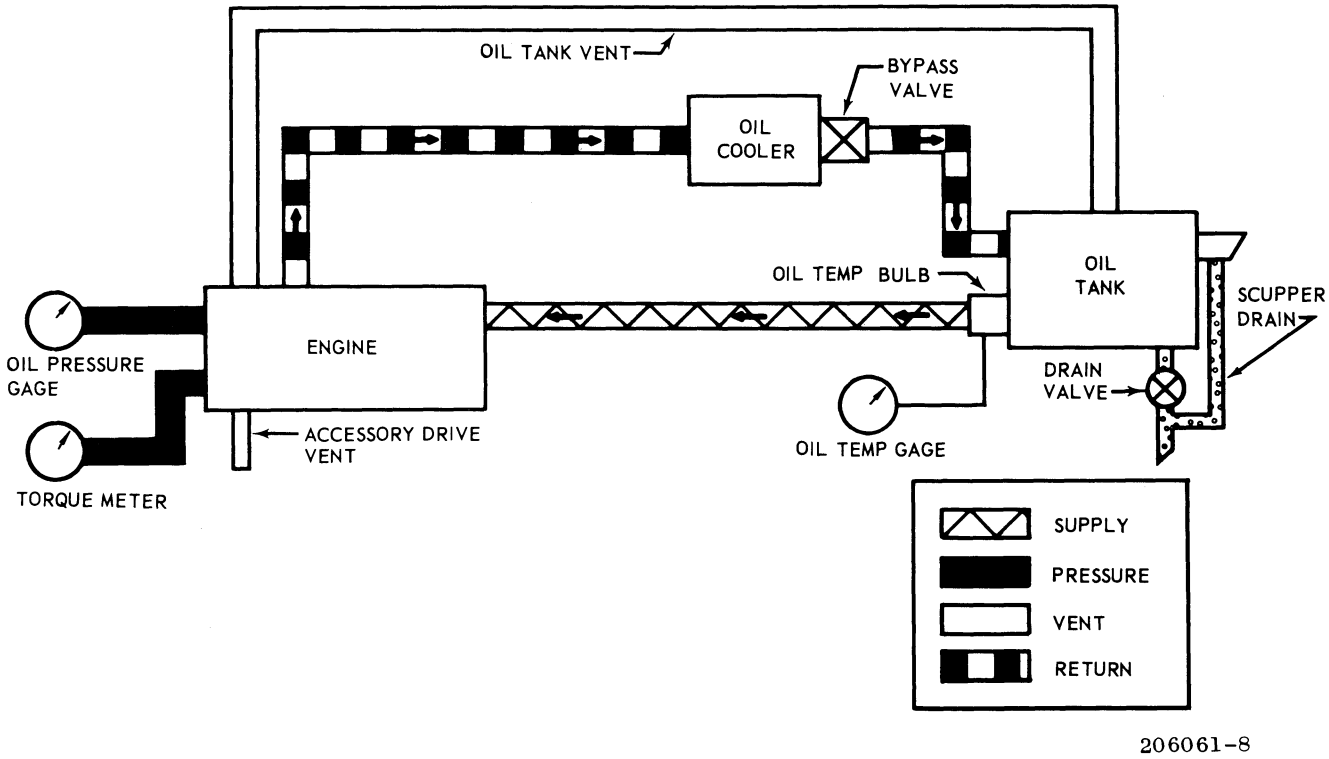

Figure 7-18. Engine Oil Supply System Schematic

valve and measure length. Submerge valve in water heated to 170°F (81°C) for five minutes. Remove valve and measure length. Minimum increased length allowed is 0.080 inches.

Note

Start to Close temperatures are approximate.

VALVE P/N	TEMP. RANGE Start to Close	TEMP. RANGE Fully Closed	MINIMUM TRAVEL INCHES
8327855	160°F(71°C)	178°F(81°C)	0.080

b. Inches of travel should occur between the two temperatures shown.

c. If valve under test does not function properly, replace with new valve.

7-100. INSTALLATION – OIL COOLER.

a. Install reducer and new packing in the inlet and outlet ports of cooler.

b. Position cooler (1, figure 7-17) on blower duct (22) with inlet fitting on right side. Align mounting holes and install screws, bolts and washers.

c. Connect engine oil return hose (23) to reducer on inlet port. Connect tube assembly (6) from oil tank to reducer on cooler outlet port.

d. Replace drain plug (21) and bypass valve (20) with new packing and safety with 0.032 inch lockwire (item 19, table 1-1).

e. Seal corners of blower duct (22) with sealant (item 7, table 1-1).

7-101. ENGINE CONTROLS.

7-102. DESCRIPTION. Control of engine power requirements is provided by the collective pitch lever, which is connected by flexible cables to control levers located on the gas producer fuel control and the power turbine governor. The twist grip, mounted on the end of the collective lever, controls the position of the gas producer fuel control which has three basic positions; cutoff, ground idle and full open. The power turbine governor lever is connected by linkage to the collective pitch control system. Movement of the collective pitch lever results in a repositioning of the governor lever. This action provides droop compensation to prevent rpm variations as power changes are made. The power turbine governor control system incorporates a linear actuator, which is controlled electrically by a GOVernor RPM INCRease-DECRease switch mounted on the collective

Figure 7-19 deleted.

pitch lever. Refer to Operation and Maintenance Manual, Allison Publication No. 10W2 for description and operation of engine fuel control system.

Note

If a replacement engine is installed, the engine furnished control levers shall be removed and replaced with power turbine governor lever (206-061-107-3) (power turbine governor), and fuel control lever (206-061-716). Helicopters 914 and subsequent use power turbine lever (206-061-107-1).

7-103. RIGGING – GAS PRODUCER FUEL CONTROLS (N_1).

Note

The following paragraph is effective for 206B helicopters equipped with a Bendix or CECO fuel control.

a. Connect the control cable rod end to throttle arm located at the end of the collective pitch lever. The rod end of the pilot's control cable is placed on the outside of the clevis. (See figure 7-20, Section A-A.)

b. Rotate the twist grip to full clockwise position and return counterclockwise to flight idle detent position. Maintain the twist grip in the flight idle position during accomplishment of subparagraphs c. and d.

Note

During rigging, if full travel cannot be obtained, (controlex) cable may be repositioned at bracket (5, figure 7-20) at firewall or at clamps.

c. Position bellcrank (2) approximately 0.5 inch forward of pivot point. (See figure 7-20) If control tube (1) requires adjustment, backoff jam nut and adjust clevis end of controlex tube. Use a wrench to hold end of controlex tube when loosening or tightening jam nut. Install pin, washer, and cotter pin to secure controlex tube (1) to upper hole bellcrank (2).

d. Recheck position of throttle twist grip to ensure grip is against idle detent stop. Recheck position of bellcrank (2) for approximate 0.5 inch dimension.

Note

If bolts are used to connect tube (3) to lever (4), tube (3) to bellcrank (2), and tube (1) to bellcrank (2), install bolts with washer under nut; tighten nut finger tight; tighten to next castellation and install cotter pin.

e. Position power lever (4) approximately 0.5 inch below power lever pivot point. Quadrant pointer on fuel control should be at 30 degree mark. (See figures 7-21 and 7-22.) Adjust lower rod-end of tube (3, figure 7-20) to obtain these settings.

CAUTION

If power lever (4) requires repositioning, loosen nut and reposition power lever. On Bendix Fuel controls torque retaining nut to 40 to 50 inch-pounds. On CECO fuel controls torque retaining nut to 65 to 85 inch-pounds. Overtorquing will cause internal binding of lever shaft.

Note

On CECO fuel controls ensure double serrated washer between power lever (4) and fuel control is installed correctly. The power lever has 24 serrations and the fuel control has 25 serrations. The power lever (4) may be set with a rigging pin (5/32 inch drill stock). The rigging pin locks the power lever (4) in a fixed position during rigging. Adjust tube (3) to correct length and connect to power lever (4) with pin, washer, and nut. Remove rigging pin.

f. Check throttle system for smoothness by turning pilot's twist grip. If twist grip forces are considered to be objectionable to the pilot, the following twist grip torque values may be used as a guideline. Torque required to rotate pilot's twist grip should not exceed 25 inch-pounds break away from the full closed position. From the initial break away force a maximum of 18 inch-pounds is normal to the flight idle position. After passing flight idle position, torque should not exceed 15 inch-pounds throughout range to full open position. The operation shall be smooth through the entire range. If forces exceed 25 inch-pounds, check throttle cable under crew seat for sharp bends or improper clamping.

g. Rig Bendix fuel control in accordance with paragraph 7-104 .

h. Rig CECO fuel control in accordance with paragraph 7-105 .

7-104. RIGGING – BENDIX FUEL CONTROL (N_1).

Note

Rig throttle controls before rigging fuel control. (Refer to paragraph 7-103)

a. Rotate throttle twist grip to the left (full power position). Check the fuel control to ensure that throttle stop arm contacts the maximum throttle stop screw on the fuel control. Rotate throttle twist grip to the right (full closed position). Check the fuel control to ensure that throttle stop arm contacts the maximum and minimum speed stops. (See figure 7-21.)

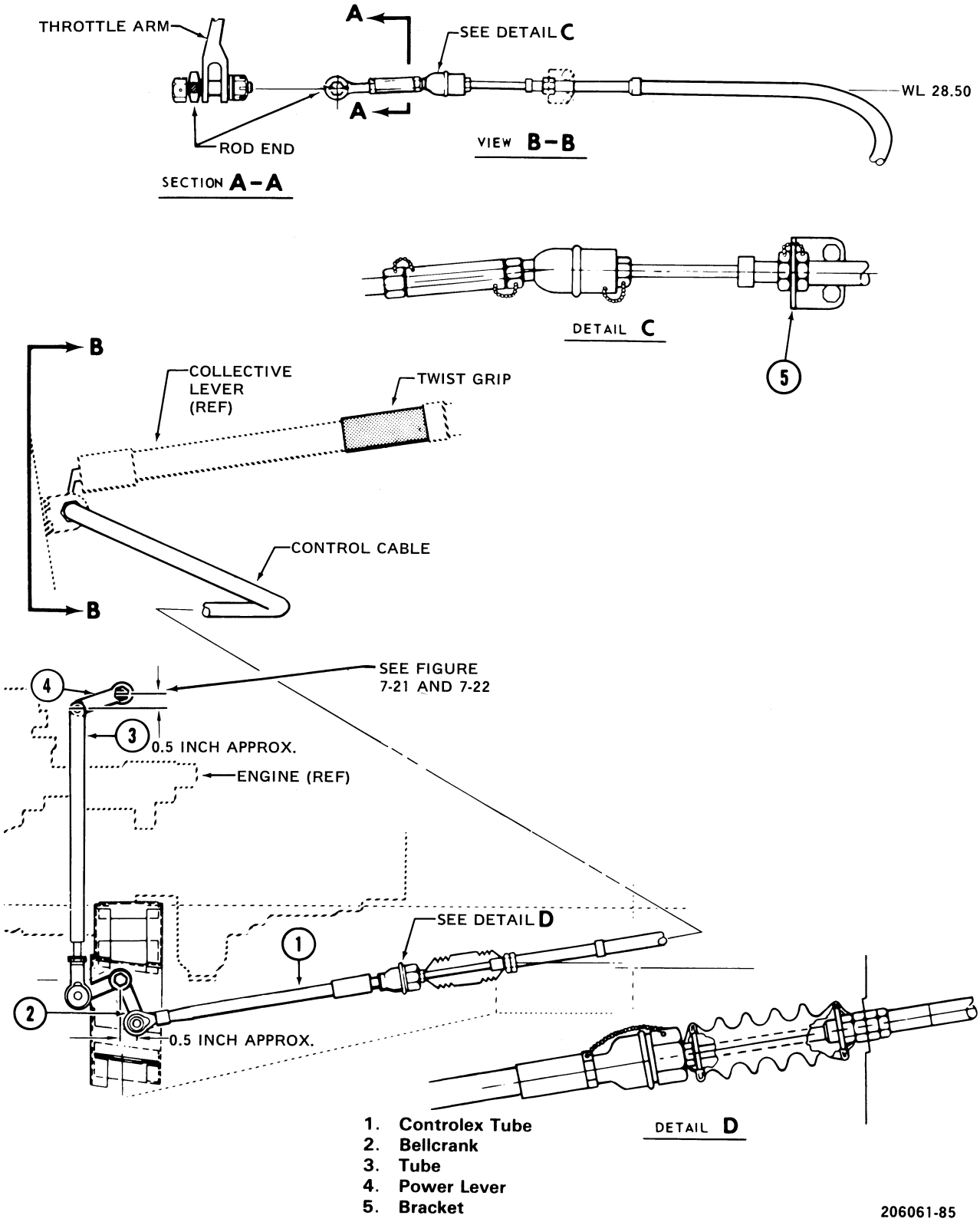

Figure 7-20. Rigging Gas Producer (N_1) Control – Model 250-C20 Engine

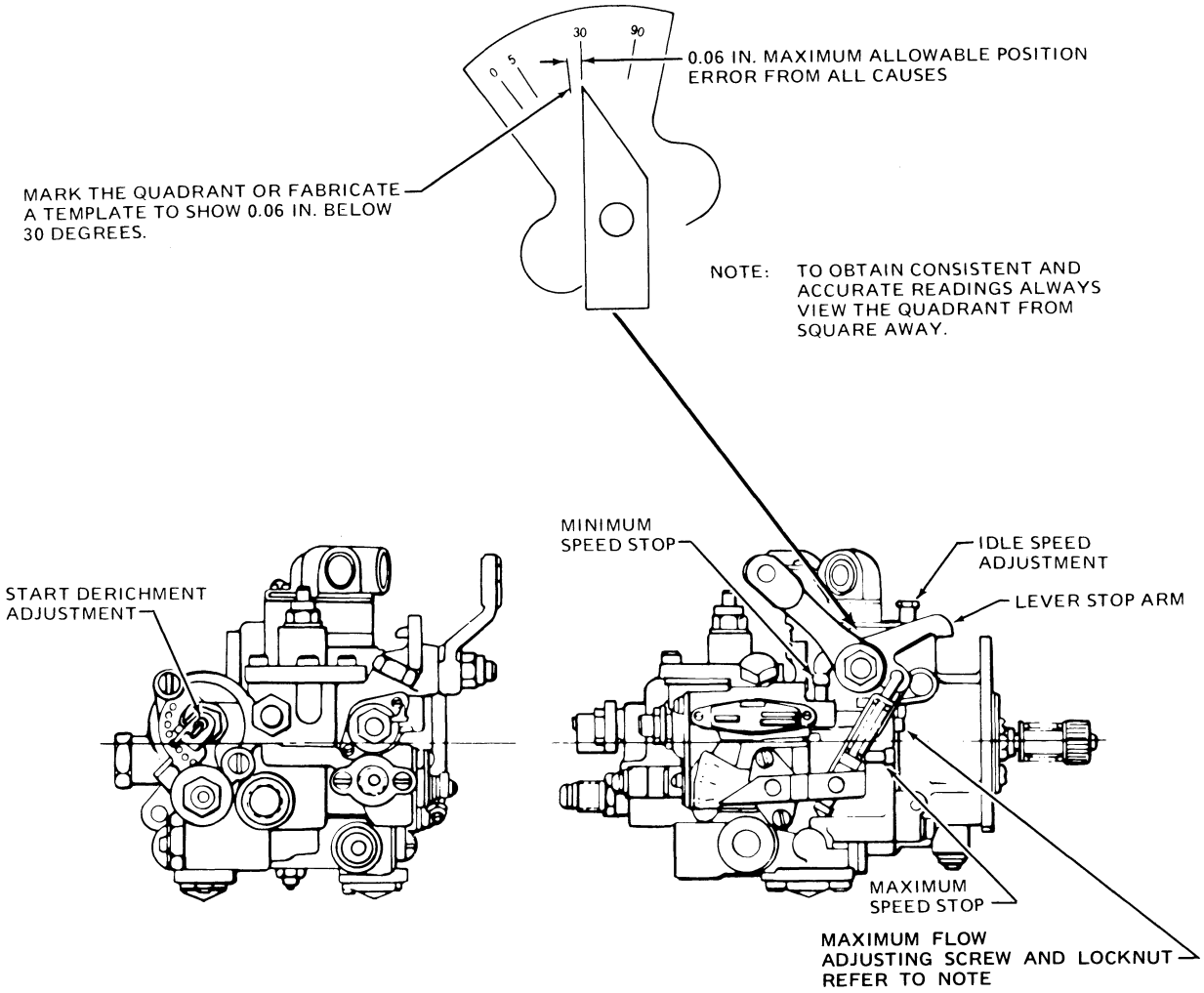

NOTE

Adjust maximum flow adjusting screw by positioning pointer to the 235 PPH scribe mark using S1116 Bristol wrench. (Refer to 250-C20 Operation and Maintenance Manual, 10W2.)

206061-51B

Figure 7-21. Bendix Gas Producer Fuel Control – Model 250-C20 Engine

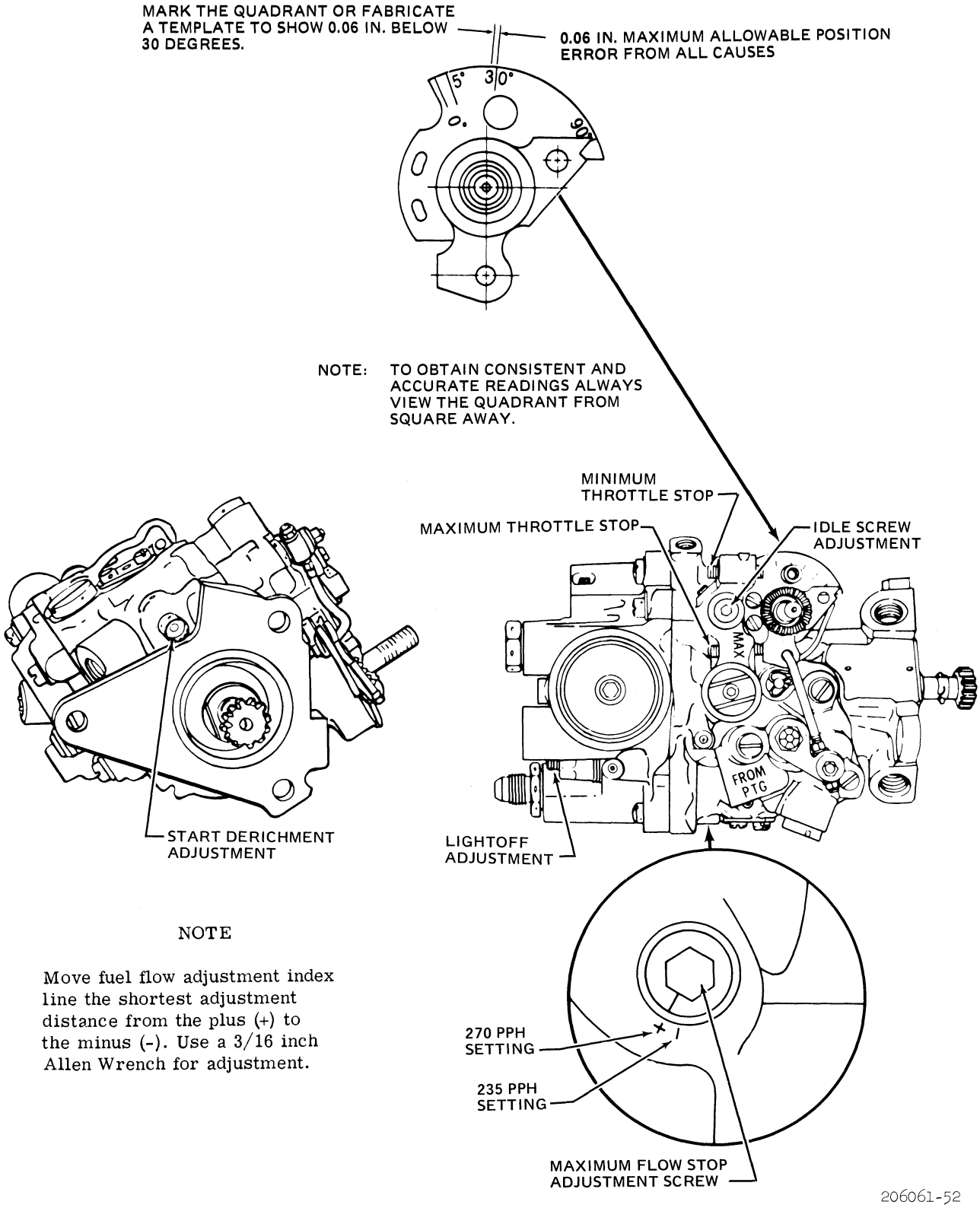

NOTE

Move fuel flow adjustment index line the shortest adjustment distance from the plus (+) to the minus (-). Use a 3/16 inch Allen Wrench for adjustment.

Figure 7-22. CECO MC-40 Gas Producer Fuel Control – Model 250-C20 Engine

b. If the fuel control lever stop arm requires repositioning, loosen retaining nut, and reposition lever stop arm so it will contact both speed stops. Reinstall retaining nut and torque to 40-50 inch-pounds. Repeat procedure of step a. to ensure lever stop arm contacts both speed stops.

c. Rotate throttle twist grip to idle detent position. Check pointer on fuel control, it must be at the 30 degree mark, or no more than 0.06 inch below 30 degree mark.

d. Adjust fuel control as necessary to obtain the following requirements with pilots control. (Refer to Allison Operation and Maintenance Manual 10W2.)

(1) Idle speed setting. When rigging is correct, change idle speed adjustment screw to obtain 60 to 62 percent N_1 speed setting with the generator switch-OFF. Using wrench (6798292), turn idle speed adjusting screw clockwise to increase or counterclockwise to decrease N_1 speed. A 1/8 turn adjustment changes engine speed approximately 5 percent.

(2) Maximum speed stop. Adjust maximum speed stop screw clockwise to increase or counterclockwise to decrease N_1 speed. One turn equals approximately 1 percent N_1 speed.

CAUTION

Do NOT adjust maximum speed stop if 793°C TOT can be reached. Do NOT exceed 104 percent N_1.

(3) Start derichment adjustment. Turn start derichment screw with an Allen wrench clockwise to enrich the starting fuel flow to improve stagnated starts, cold weather starts, or high altitude ground starts. Turn counterclockwise for a leaner fuel flow when starts are too hot. Make adjustments in 15 degree maximum increments (dots are 10 degrees apart), tighten the locknut after each setting until satisfactory starts are obtained. Secure locknut to the P_c filter-fitting with lockwire. (See figure 7-21)

CAUTION

Monitor TOT closely after each start-derichment adjustment to ensure overtemperature limits are not exceeded.

(4) Maximum flow stop. The maximum flow stop, located near the forward end of the fuel control must be set. (See figure 7-21) Adjustment screw is located near the drive end of the fuel control and a pointer is attached to the screw with a fixed protractor attached to the drive body. The pointer is to be aligned with the 235 ppw scribe mark on the quadrant in accordance with 250-020 Operation and Maintenance Manual 10W2.

e. Start engine and allow engine to run at minimum idle speed for a minimum of 5 minutes to stabilize temperatures in engine.

Note

Ensure N_2 power turbine governor control rigging is complete before adjusting flight idle.

(1) Increase throttle twist grip to provide 100 percent N_2 with collective control in flat pitch, then decrease twist grip to flight idle detent.

(2) Gas producer N_1 speed should be 61 percent with generator switch-OFF. Adjust idle speed adjusting screw with wrench (6798292), if necessary, to obtain 61 percent N_1 idle speed.

WARNING

Never attempt to adjust N_1 idle speed by adjusting rod (3, figure 7-20). Pointer must be at 30 degrees or within the maximum specified limit of 0.06 inch below 30 degree mark. N_1 idle speed must be adjusted by the idle speed adjusting screw. (Refer to subparagraph d.) Failure to comply with this warning may result in an engine flameout. (See figure 7-21)

f. Check idle speed setting with generator turned off. Checking and setting idle speed is very important. When rolling the twist grip to the idle position slowly or snapping it to idle position, the stabilized idle rpm should repeat every time. Failure to repeat indicates that the rigging is not adjusted properly. The rigging of the linkage must provide sufficient control to accurately position at the idle stop location (30 degrees) on the fuel control.

g. After rigging is complete, check N_1 control system for security.

7-105. RIGGING – CECO FUEL CONTROL (N_1).

Note

Rig throttle controls before rigging fuel control. (Refer to paragraph 7-103)

a. Rotate throttle twist grip to the left (full power position). Check the fuel control to ensure that the throttle stop arm contacts the maximum throttle stop screw on the fuel control. Rotate the throttle twist grip to the right past flight idle position to closed throttle position. Check adjustment of minimum stop screw on fuel control. (See figure 7-22)

b. Ensure that screw contact is made at a minus 2 degrees on the fuel control quadrant. Minus 2 degrees is 1/32 inch to the left of the 0 degree mark. If reading is not minus 2 degrees, readjust the minimum stop on fuel control to obtain minus 2 degrees on fuel control quadrant as follows:

(1) Turn the minimum stop screw to obtain 0 degrees on the quadrant with the throttle against the stop.

(2) Turn the minimum stop screw out (counterclockwise) one half turn.

(3) Recheck to be sure the pointer is at minus 2 degrees when the twist grip is in the "Fuel OFF" position.

Note

If after accomplishing the above, limitations of the aircraft engine control linkage prevents reaching minus 2 degrees, set the minimum stop at 0 degrees.

c. Adjust fuel control as necessary to obtain the following requirements with pilots control. (Refer to Allison Operation and Maintenance Manual 10W2.)

(1) Maximum throttle stop. Using a 3/32 inch Allen wrench adjust the max throttle stop to obtain the required engine max power setting. Turn the stop screw clockwise to decrease angular travel or to reduce max N_1 speed. A 1/8 turn equals approximately 1 percent N_1.

(2) Idle adjustment. Make the idle speed adjustment by setting the throttle lever at 30 degrees and trimming the idle adjustment screw with a 5/32 inch Allen wrench to obtain engine idle speed requirements. Turn the screw clockwise to increase the N_1 speed. A 1/8 turn equals approximately 1 percent N_1.

(3) Lightoff adjustment. Make the lightoff adjustment by trimming the screw with 5/64 inch Allen wrench to obtain engine starting fuel and exhaust gas temperature requirements. Turn the screw clockwise to decrease lightoff fuel flow.

CAUTION

Make the lightoff adjustment in increments of 1/16 turn maximum. Limit the adjustment to plus or minus 1/4 turn from the original setting.

(4) Start derichment adjustment. Make the start derichment adjustments to obtain the required engine stall margin. Turn the adjustment screw clockwise with a 1/4 inch Allen wrench having a 1/2 inch offset to decrease the width of the notch. Decreased notch width provides less derichment for faster or hotter starts. The normal setting is with the travel limiting screw at bottom center.

CAUTION

Make the start derichment adjustment in increments of 1/8 turn maximum.

d. Start engine and allow engine to run at minimum idle speed for a minimum of 5 minutes to stabilize temperatures in engine.

Note

Ensure N_2 power turbine governor control rigging is complete before adjusting flight idle.

(1) Increase throttle twist grip to provide 100 percent N_2 with collective control in flat pitch, then decrease twist grip to flight idle detent.

(2) Gas producer N_1 speed should be 60 to 62 percent with generator switch-OFF. Adjust idle speed adjusting screw with a 5/32 inch Allen wrench, if necessary, to obtain 61 ± 1 percent N_1 idle speed. (See figure 7-22)

WARNING

Never attempt to adjust N_1 idle speed by adjusting tube (3, figure 7-20). Pointer must be at 30 degrees or within the specified limit of 0.06 inch (maximum) below 30 degrees mark. N_1 idle speed must be adjusted by the idle speed adjusting screw. (Refer to subparagraph c.) Failure to comply with this warning may result in an engine flameout. (See figure 7-22)

e. Check idle speed setting with generator turned OFF. Checking and setting idle speed is very important. When rolling the twist grip to the idle position slowly or snapping it to idle position, the stabilized idle rpm should repeat every time. Failure to repeat indicates that the rigging is not adjusted properly. The rigging of the linkage must provide sufficient control to accurately position at the idle stop location (30 degrees) on the fuel control.

f. After rigging is complete, check N_1 control system for security.

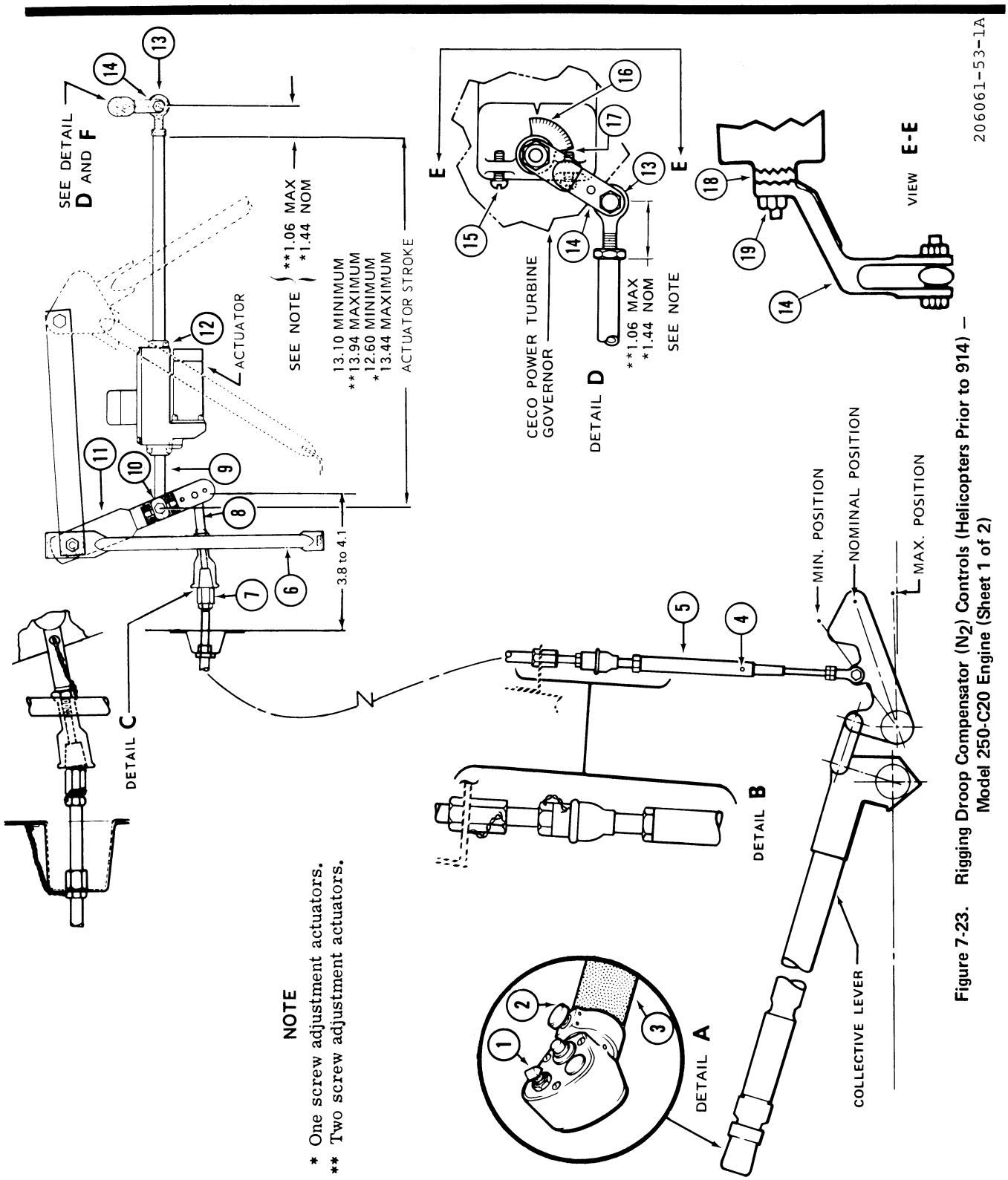

Figure 7-23. Rigging Droop Compensator (N_2) Controls (Helicopters Prior to 914) — Model 250-C20 Engine (Sheet 1 of 2)

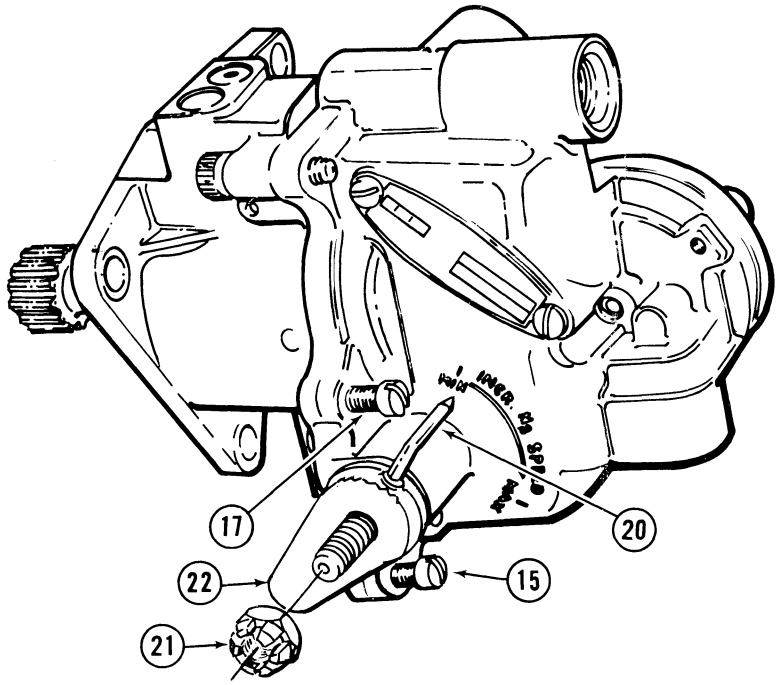

BENDIX POWER TURBINE GOVERNOR

1. Switch - Governor RPM
2. Detent Button
3. Twist Grip
4. Shear Rivet
5. Slider Assembly
6. Support Assembly
7. Control Cable
8. Cable End Fitting
9. Actuator End Fitting
10. Adjustment Plate
11. Bellcrank
12. Adjustment Screw
13. Rod-End
14. Lever
15. Minimum RPM Stop Screw
16. Index Plate
17. Maximum RPM Stop Screw
18. Double Serrated Washer
19. Nut
20. Pointer
21. Nut
22. Stop Arm

206061-53-2

Figure 7-23. Rigging Droop Compensator (N_2) Controls (Helicopters Prior to 914) — Model 250-C20 Engine (Sheet 2 of 2)

7-106. RIGGING – DROOP COMPENSATOR CONTROLS (N_2), HELICOPTERS PRIOR TO 914.

Note

Rig collective control system before rigging power turbine governor controls. (Refer to Section IV .)

a. Disconnect cable end fitting (8, figure 7-23) from bellcrank (11). Move the collective pitch lever and check control cable (7) and slider assembly (5) for security and freedom from twisting and binding. (See figure 7-23 , detail B and C for safety wire application.)

b. Inspect shear rivet (4) of slider assembly (5) for security. Replace rivet if loose.

c. Lock collective lever in the full up position. Adjust either or both ends of control cable (7) to obtain 3.8 to 4.1 inches between firewall and center of hole in cable end fitting (8).

d. Connect cable end fittings (8) in the center hole of bellcrank (11) and secure with bolt, washers and nut. Tighten nut finger tight and install cotter pin.

e. Install linear actuator end fitting (9) onto bellcrank (11). Position actuator end fitting 0.06 to 0.18 inch from bottom of slot in bellcrank (11). Secure with bolt, washers, serrated adjustment plate (10) and nut. Tighten nut finger tight and install cotter pin.

f. Rig Bendix power turbine governor in accordance with paragraph 7-107.

g. Rig CECO power turbine governor in accordance with paragraph 7-108 .

7-107. RIGGING – BENDIX POWER TURBINE GOVERNOR. (HELICOPTERS PRIOR TO 914.)

Note

Rig droop compensator controls before rigging Bendix governor control. (Refer to paragraph 7-106)

a. Adjust linear actuator as follows:

(1) On helicopters equipped with early model linear actuators (544086-2-1) adjust as follows:

(a) (Deleted.)

(b) Secure rod-end (13) on outboard hole of lever (14) with bolt, two washers and nut (do not install cotter pin until rigging is complete).

(c) Check collective lever for full up position and "beep" actuator to full rpm INCRease. (Actuator arm will be fully retracted.)

CAUTION

Do not exceed 1.06 inches maximum adjustment at rod-end (13). (See figure 7-23)

(2) On helicopters equipped with linear actuator (SYLC 9548) adjust as follows:

(a) Install lever (14) approximately 90 degrees to stop arm (22) and pointer (20) as close as the serrations on lever (14) and adjustment of rod-end (13) will permit. Total travel of lever (14) to be equal either side of a vertical line. (See figure 7-23) Torque lever (14) retaining nut to 40 to 50 inch-pounds.

(b) Tighten nut at rod-end (13) and lever (14) finger tight and install cotter pin.

b. Position collective lever full up and governor switch (1) beeped to full increase (actuator stroke fully retracted). Check that governor shaft stop arm (22) is contacting maximum rpm stop screw (17).

c. Position collective lever to flat pitch (full down), and beep governor switch (1) to full decrease (actuator stroke fully extended). Check that governor shaft stop arm (22) is positioned near minimum rpm stop screw (15).

d. Start engine and allow engine to run at minimum idle speed for a minimum of 5 minutes to stabilize temperatures in engine.

(1) With collective lever full down beep governor switch (1) to full decrease. Check for a minimum of 95 percent N_2 rpm.

(2) Beep governor switch (1) to full increase. Check for a maximum of 100 percent N_2 rpm.

(3) If N2 rpm range of 95 to 100 percent cannot be obtained, recheck procedures of subparagraphs a. through c.

(4) To correct or obtain additional droop compensation, the rate can be changed by repositioning the serrated adjustment plates (10) and/or relocating the cabl end fitting (8) to another position on bellcrank (11 When governor lever (14) is installed that contains two holes for rod-end (13) mounting, droop compensation rate may be changed by relocating rod-end to inboard hole of lever.

e. Droop compensation is acceptable if the following conditions are met:

(1) The N_2 power turbine governor should maintain any selected N_2 rpm throughout the collective travel range.

Note

Transient rotor rpm droop is acceptable down to 95 percent N_2 rpm, not exceeding 5 seconds. (Refer to 206B Flight Manual for N_2 limits.)

(2) Check flight idle for 60 to 62 percent N_2 rpm.

f. After adjustments are complete, position the collective lever in the full up position and beep governor switch (1) to full increase (actuator stroke fully retracted). Check to verify that no interference exists between maximum stop screw (17) and governor stop (22). Adjust stop screw (17) if interference exists.

g. (Deleted)

h. Recheck droop compensator system for installation of lockwire, cotter pins, and security of jam nuts.

7-108. RIGGING — CECO POWER TURBINE GOVERNOR. (HELICOPTERS PRIOR TO 914.)

Note

Rig droop compensator controls before rigging CECO governor controls. (Refer to paragraph 7-106)

a. Adjust linear actuator stroke as follows:

(1) Linear actuators (544086-2-1) with two adjusting screws:

(a) Set actuator stroke by turning both adjusting screws to obtain maximum stroke travel.

(b) Reduce stroke to nominal setting of 0.84 inch by turning both adjusting screws (12, figure 7-23) the same number of turns from maximum adjustment.

(c) Actuator overall length, after adjustment should be a minimum of 13.10 inches to a maximum of 13.94 inches between centerline of end fitting (9) and end of actuator shaft. (See figure 7-23)

(2) Linear actuators (SYLC 9548) with one adjusting screw:

(a) Set actuator stroke by turning adjusting screw (12) clockwise and obtain maximum stroke travel.

(b) Reduce stroke to nominal setting of 0.84 inch by turning adjusting screw (12) counterclockwise from maximum adjustment.

(c) Actuator overall length, after adjustment should be a minimum of 12.60 inches to a maximum 13.44 inches between centerline of end fitting (9) and end of actuator shaft. (See figure 7-23)

(3) Linear actuator (206-062-721-11).

Note

The stroke limit adjustment from nominal is made by rotating the hex shaped extension at the rod end of the actuator. Clockwise rotation increases the limit adjustment from a nominal center position, and counterclockwise adjustment decreases it. It is not necessary to remove the lockwire or loosen the screws of the retainer plate to make this adjustment. Rotation of the extended hex portion of the actuator drives the two limit stops in opposite directions from one another, which provides free ram travel between the two stops.

(a) Run unit to a neutral (center) position. One complete revolution of the hex extension will change the stroke adjustment 0.083 inch.

(b) Actuator overall length, after adjustment should be a minimum of 14.225 inches to a maximum 15.755 inches between centerline of end fittings.

Note

When the ram engages either one of the stops, the load is reflected back through the gear train to the top pass planetary adjacent to the motor where a preloaded ring gear is allowed to rotate. Running against the stop will not cause failure because the motor is not stalled, but allowed to run against the clutch. Extended motor operation after stops are contacted will cause an increase in heat, and may eventually result in failure of the motor, if it is completely neglected.

Note

When applying torque to the locknut of the rod end, use a wrench on the hex shaft and the locknut to prevent internal damage to the actuator.

(4) After actuator length is established, operate actuator through a complete cycle and recheck for required dimensions.

b. Position collective lever in the full up position and lock. Beep governor switch (1) to full increase (actuator stroke fully retracted) and index double serrated washer (18) and lever (14) as follows:

CAUTION

Do not exceed the 1.06 inch maximum rod-end (13) dimension for linear actuators (544086-2-1). If linear actuator (SYLC 9548) is installed a nominal rod-end dimension of 1.44 inch should be used.

(1) Index the double serrated washer (18) and lever (14) maintaining an actuator rod-end (13) dimension of 1.06 inch (maximum) or 1.44 inch (nominal), depending on which linear actuator is installed, while holding governor shaft and index plate (16) between the 80 and 85 degree position.

CAUTION

The double serrated washer (18) has a different number of serrations on each side for vernier adjustment and must not be reversed. The side with the smallest serrations must be installed next to the governor shaft index plate (16). The outboard side with the larger serrations (lightly stamped OUTSIDE on inside diameter) must mate with serrations on lever (14). (See figure 7-23 , detail D and view E-E.) The correct position of the double serrated washer (18) will be found somewhere within one full turn of the washer.

(2) Torque lever retaining nut (19) to 65 to 85 inch-pounds.

Note

Governor lever (206-061-107-3) has replaced levers (206-061-107-1 and 206-061-737). Lever (206-061-107-3) contains two holes for attachment of actuator rod-end (13) to increase governor travel and provide an additional adjustment point to compensate for droop. (Refer to Service Letter 206-201 , for lever (206-061-107-3) installation instructions.)

c. Secure rod-end (13) on lever (14) with bolt, two washers, and nut. Do not install cotter pin at this time.

Note

Do not adjust the minimum rpm stop screw (15). If required to prevent the index plate (16) from bottoming out against the maximum rpm stop screw (17) at full up collective and governor switch (1) beeped to full increase, adjust maximum rpm stop screw (17) to obtain 0.030 inch clearance.

Note

If lever (206-061-107-3) is installed, attach rod-end in outboard hole of lever.

(1) Check collective lever is still in the full up position and that linear actuator is in full increase position (actuator stroke fully retracted).

(2) Check governor shaft index plate (16) is positioned between 80 and 85 degrees. If required, reposition lever (14) and double serrated washer (18). (Refer to subparagraph b.) Retorque nut (19) to 65 to 85 inch-pounds.

(3) Tighten jam nut for rod-end (13), ensure rod-end is centered in lever. Tighten nut finger tight securing rod-end (13) to lever (14) and install cotter pin.

d. Purge fuel control and governor in accordance with instructions contained in Allison Commercial Service Letter, 250-C20 CSL-1011.

e. Final rigging of droop compensator controls.

Note

Final rigging is accomplished after the initial ground run. Move the helicopter to adequate tie-down facilities. If tiedown facilities are not available, final adjustments may be made following flight power checks.

(1) Start engine and allow engine to run at minimum idle speed for a minimum of 5 minutes to stabilize temperatures in engine.

(2) With the collective lever full down, throttle full open, and governor switch (1) beeped to full decrease (actuator stroke fully extended), check for a minimum of 95 percent N_2 rpm.

(3) With the collective lever full down, throttle full open, and governor switch (1) beeped to full increase (actuator stroke fully retracted) check for a maximum of 100 percent N_2 rpm.

f. Droop compensation is acceptable if the following conditions are met:

(1) The N_2 power turbine governor should maintain any selected N_2 rpm throughout the collective travel range.

Note

Transient rotor rpm droop to 95 percent N_2 rpm is permitted, but should not exceed 5 seconds. (Refer to 206B Flight Manual for N_2 limits.)

(2) With helicopter in steady state flight and N_2 at 100 percent, lower collective full down to enter autorotation. A transient N_2 overspeed of up to 106 percent is normal with the CECO Control, depending on how rapidly the collective is lowered. After two to five seconds, the N_2 should decrease to approximately 103 percent. Since this is a normal condition, no further attempt should be made to adjust N_2 to 100 percent with the helicopter in autorotative descent by adjustment of rigging. If desired, the pilot can reduce the N_2 to 100 percent with the beep switch or by raising collective control slightly.

(3) Check flight idle for 60 to 62 percent.

g. To obtain or correct droop compensation accomplish the following, as required:

(1) Reposition serrated adjustment plates (10) on bellcrank (11).

(2) Reposition actuator end fitting (9) on bellcrank (11).

(3) Reposition rod-end (13) on lever (14) to inboard hole when lever (206-061-107-3) is installed. (Refer to Service Letter 206-201, for lever installation instructions.)

Note

Do NOT adjust the minimum rpm stop screw (15). Position collective lever full up and governor switch (1) beeped to full increase. If index plate (16) is bottoming out against the maximum rpm stop screw (17), adjust screw to obtain 0.010 to 0.030 inch clearance.

h. After adjustments are complete, recheck droop compensator system of installation of lockwire, cotter pins and security of jam nuts. (See figure 7-23, details B, C and D.)

7-109. RIGGING – DROOP COMPENSATOR CONTROLS (N_2), HELICOPTERS 914 AND SUB.

Note

Rig collective control system before rigging power turbine governor controls. (Refer to Section IV.)

a. Disconnect and remove rod assembly (1, figure 7-25.) Adjust length of rod assembly to 38.40 inches from center of bolt hole to center of bolt hole.

a1. If not previously installed, install torque tube (14, figure 7-25) as follows:

(1) Install left bracket (12) with two washers (16) and two bolts (17).

(2) Slide left end washer (13) and right end washer (13) onto torque tube (14).

(3) Temporarily install right bracket (15) with two washers (16) and two bolts (17) onto torque tube (14).

(4) Check clearance between right end washer (13) and torque tube. Peel laminated shim (18) to maintain 0.003 to 0.020 inch clearance.

(5) Remove right bracket (15) and install shim (18) between washer (13) and torque tube (14).

(6) Reinstall right bracket, bolts, and washers.

(7) Recheck gap 0.003 to 0.020 inch and free rotation of torque tube.

b. Install rod assembly (1) with adjustable rod-end forward. Connect adjustable rod-end to center hole of bellcrank (2) and fixed rod-end to the right side of bellcrank (3). Secure with bolts, washers, and nuts.

Note

If rod assembly (1) required readjustment it will be necessary to readjust retainer on firewall aft of boot, to allow free movement of the rod assembly.

c. Install actuator end fitting in center hole of bellcrank (3) and secure with bolt, washer, and nut. Adjust actuator (4) stroke as follows:

(1) Linear actuators (SYLC 9548) with one adjusting screw:

(a) Loosen jam nut (10) and washer (12) at slotted adjusting screw (11) on actuator. (See figure 7-25, view A-A.)

(b) Set stroke of actuator for 0.95 inches from full retract to full extend.

(c) Beep governor switch to full decrease (actuator stroke fully extended) and adjust actuator rod-end (6) to provide an overall maximum length of 15.40 inches.

(2) Linear actuator (206-052-721-11)

Note

The stroke limit adjustment from nominal is made by rotating the hex shaped extension at the rod end of the actuator. Clockwise rotation increases the limit adjustment from a nominal center position, and counterclockwise adjustment decreases it. It is not necessary to remove the lockwire or loosen the screws of the retainer plate to make this adjustment. Rotation of the extended hex portion of the actuator drives the two limit stops in opposite directions from one another, which provides free ram travel between the two stops.

(a) Run unit to a neutral (center) position. One complete revolution of the hex extension will change the stroke adjustment 0.083 inch.

Note

When the ram engages either one of the stops, the load is reflected back through the gear train to the top pass planetary adjacent to the motor where a preloaded ring gear is allowed to rotate. Running against the stop will not cause failure because the motor is not stalled, but allowed to run against the clutch. Extended motor operation after stops are contacted will cause an increase in heat, and may eventually result in failure of the motor, if it is completely neglected.

Note

When applying torque to the locknut of the rod end, use a wrench on the hex shaft and the locknut to prevent internal damage to the actuator.

d. After actuator length is established, operate actuator through a complete cycle and recheck for required dimensions.

e. Rig Bendix power turbine governor in accordance with paragraph 7-110).

f. Rig CECO power turbine governor in accordance with paragraph 7-111 .

7-110. RIGGING — BENDIX POWER TURBINE GOVERNOR. (HELICOPTERS 914 AND SUB.)

Note

Rig droop compensator controls before rigging Bendix governor control. (Refer to paragraph 7-109 .)

a. (Deleted.)

b. Install governor lever (14) on governor shaft, position 90 degrees to centerline of stop arm (19). (See figure 7-24, view A.) Torque nut (15) 40 to 50 inch-pounds.

c. Position collective lever in the full up position and lock. Beep governor switch (1) to full increase (actuator stroke retracted) and adjust actuator rod-end (13) as follows:

(1) Position governor lever (14) 30 degrees forward of the vertical centerline shown in figure 7-24 , view A.

(2) Holding the governor lever (14) in a 30 degree position, adjust actuator rod-end (13) to align with hole on (206-061-107-1) governor lever or outer hole on (206-061-107-3) governor lever. Secure rod-end to governor lever with bolt, three washers, nut, and cotter pin.

d. Final rigging of droop compensator controls.

Note

Final rigging is accomplished after the initial ground run. Move the helicopter to adequate tie down facilities. If tie down facilities are not available, final adjustments may be made following flight power checks.

(1) Start engine and allow engine to run at minimum idle speed for a minimum of 5 minutes to stabilize temperatures in engine.

(2) With collective lever full down, throttle twist grip (3) full open, beep governor switch (1) to full decrease (actuator stroke fully extended). Check for a minimum of 95 percent N_2 rpm.

(3) With collective lever full down, throttle twist grip (3) full open, beep governor switch (1) to full increase (actuator stroke fully retracted). Check for a maximum of 100 percent N_2 rpm.

Note

If 95 to 100 percent N_2 rpm cannot be obtained adjust linear actuator slotted adjusting screw (12) to obtain required rpm. Two full turns of slotted adjusting screw equals 1 percent N_2 rpm. If additional adjustment is required, readjust actuator rod-end (13). Do NOT exceed 0.75 inch rod-end adjustment from nominal. (See figure 7-24)

e. Droop compensation is acceptable if the following conditions are met:

(1) The power turbine governor should maintain any selected N_2 rpm throughout the collective travel range.

Note

Transient rotor rpm droop to 95 percent N_2 rpm is permitted, but should not exceed 5 seconds. (Refer to 206B Flight Manual for N_2 limits.)

(2) Check for flight idle speed of 60 to 62 percent rpm.

f. To obtain or correct droop compensation accomplish the following, as required:

(1) Reposition forward end of rod assembly (5, figure 7-24 to another position on torque tube assembly (4).

(2) Reposition actuator end-fitting (8) to another position on bellcrank (7).

g. After adjustments are complete and engine shut down, accomplish the following:

(1) (Deleted.)

(2) Position collective lever full up and beep governor switch to full increase (actuator stroke fully retracted). **Check and verify that no interference exists between maximum stop screw (18) and governor stop arm (19. Adjust stopscrew (18) if interference exists.**

(3) Replace all cotter pins, lockwire, and apply standard torque to jam nuts and check nuts. Ensure adjustable rod-ends are centered in clevises.

7-111. RIGGING – CECO POWER TURBINE GOVERNOR. HELICOPTER 914 AND SUB.

Note

Rig droop compensator controls before rigging CECO governor control. (Refer to paragraph 7-109)

a. Position collective lever full up and beep governor switch to full increase (actuator stroke full retracted). Adjust governor lever (5, figure 7-25) as follows:

(1) Position governor shaft index plate (9) between 80 and 85 degrees. (See figure 7-25, detail B.)

(2) Index the double serrated washer (8) to the governor shaft index plate (9) so that governor lever (5) will align with actuator rod-end (6). Torque governor lever retaining nut to 65 to 85 inch-pounds.

Note

The double serrated washer (8) has a different number of serrations on each side for vernier adjustment and must not be reversed. The side with the smallest serrations must be installed next to the governor shaft index plate (9). The opposite side with the larger serrations (lightly stamped OUTSIDE on inside diameter) must mate with the serrations on the governor lever (5). (See figure 7-23, view E-E.)

(3) Connect actuator rod-end (6) to governor lever (5) with bolt, washers, nut and cotter pin. If lever (206-061-107-3) is installed, install rod-end (6) in outboard hole.

(4) Check collective lever is still in the full up position. Beep governor switch to full decrease then full increase. Check governor shaft index plate (9) and maximum rpm stop screw for bottoming out. Adjust maximum stop screw if required. Bottom collective lever and beep governor switch to full decrease. Check governor shaft index plate (9) and minimum stop screw for bottoming out, adjust, if required.

Note

Bottoming out of governor shaft index plate (9) against maximum or minimum rpm stop screws may cause damage to torque tube assembly (2).

b. Purge fuel control and governor in accordance with instructions contained in Allison Commercial Service Letter, 250-C20 CSL-1011.

c. Final rigging of droop compensator controls.

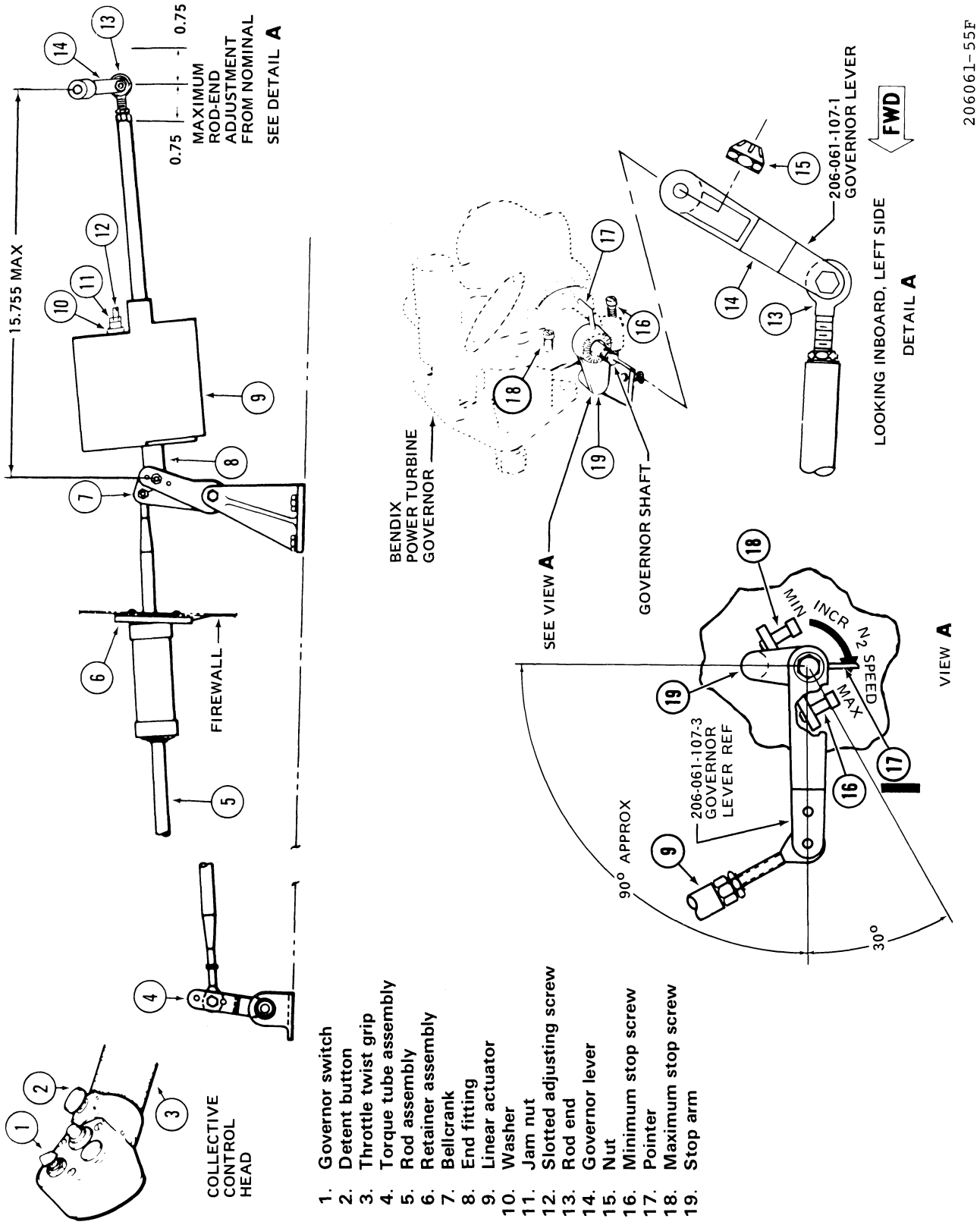

1. Governor switch
2. Detent button
3. Throttle twist grip
4. Torque tube assembly
5. Rod assembly
6. Retainer assembly
7. Bellcrank
8. End fitting
9. Linear actuator
10. Washer
11. Jam nut
12. Slotted adjusting screw
13. Rod end
14. Governor lever
15. Nut
16. Minimum stop screw
17. Pointer
18. Maximum stop screw
19. Stop arm

Figure 7-24. Rigging the Bendix Droop Compensation (N2) Controls (Helicopters 914 through 2211) — Model 250-C20 Engine

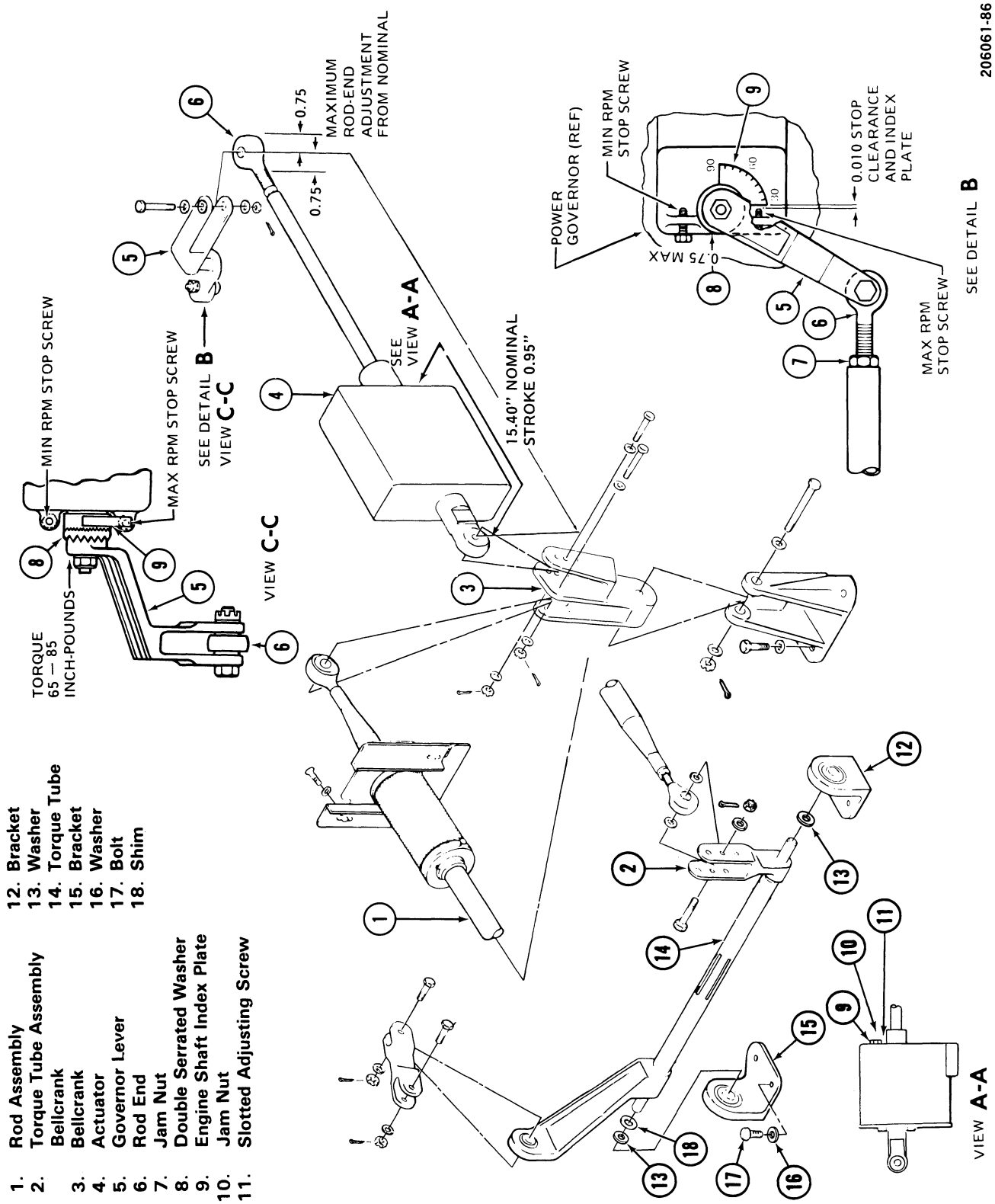

Figure 7-25. Rigging the CECO Droop Compensator (N_2) Controls (Helicopters 914 through 2211) — Model 250-C20 Engine

Note

Final rigging is accomplished after the initial ground run. Move the helicopter to adequate tie down facilities. If tie down facilities are not available, final adjustments may be made following flight power checks.

(1) Start engine and allow engine to run at minimum idle speed for a minimum of 5 minutes to stabilize temperatures in engine.

(2) With collective lever full down, throttle full open, and governor switch beeped to full decrease (actuator stroke fully extended) check for a minimum of 95 percent N_2 rpm.

(3) With collective lever full down, throttle full open, and governor switch beeped to full increase (actuator stroke fully retracted), check for a maximum of 100 percent N_2 rpm.

Note

If 95 to 100 percent N_2 rpm cannot be obtained adjust linear actuator slotted adjustment screw (11) to obtain required rpm. Two full turns of slotted adjustment screw equals 1 percent N_2 rpm. If additional adjustment is required, readjust actuator rod-end (6). Do NOT exceed 0.75 inch rod-end adjustment from nominal. (See figure 7-24.)

d. Droop compensation is acceptable if the following conditions are met:

(1) The power turbine governor should maintain any selected N_2 rpm throughout the collective range.

Note

Transient rotor rpm droop to 95 percent N_2 rpm is permitted, but should not exceed 5 seconds. (Refer to 206B Flight Manual for N_2 limits.)

(2) With helicopter in steady state flight and N_2 at 100 percent, lower collective full down to enter autorotation. A transient N_2 overspeed of up to 106 percent is normal with the CECO Control, depending on how rapidly the collective is lowered. After two to five seconds, the N_2 should decrease to approximately 103 percent. Since this is a normal condition, no further attempt should be made to adjust N_2 to 100 percent with the helicopter in autorotative descent by adjustment of rigging. If desired, the pilot can reduce the N_2 to 100 percent with the beep switch or by raising collective control slightly.

(3) Check flight idle speed for 60 to 62 percent rpm.

e. To obtain or correct droop compensation accomplish the following, as required:

(1) Reposition forward end of rod assembly (1) to another position on bellcrank (2).

(2) Reposition actuator end-fitting to another position on bellcrank (3).

f. After adjustments are complete and engine shut down, accomplish the following:

(1) Position collective lever full down and beep governor switch to full decrease (actuator stroke fully extended). Set the minimum rpm stop screw to provide 0.010 inch minimum clearance to governor shaft index plate (9). (See figure 7-25, detail B.)

(2) Position collective lever full up and beep governor switch to full increase (actuator stroke fully retracted). Set the maximum rpm stop screw to provide 0.010 inch minimum clearance to governor shaft index plate (9). (See figure 7-25, detail B.)

(3) Replace all cotter pins, lockwire, and apply standard torque to jam nuts and check nuts. Ensure adjustable rod-ends are centered in clevises.