CHG LET	REVISION	BY / DATE	CHK / APPD

NOTES:

1. K-PB54 TO BE ALUMINUM WIRE PER S-1563-6-9.

INACTIVE:
EFF SER 337-0756
THRU SER 337-0978
RLY 5-22-68
EO & RR 01830
GKI 11/W
MDS 11

21	C611002-0102	VOLTAGE REGULATOR	1553016
20	22370-60	SHUNT (OB124)	1570152
19	0770038-9	CONDENSER ASSY	
18	0770038-8	CONDENSER ASSY	
17	S-1360-1	BATTERY CONTACTOR	1553014
16	S-1090-2	FUSE HOLDER	1550000
15	S-1091-5	FUSE	1550000
14	S-1790-1	SWITCH-MASTER	
13	62 Ω, 1 WATT	RESISTOR	
12	S-1360-5	CIRCUIT BREAKER	
11	300 OHM ½ WATT	RESISTOR	
10	S-17[illegible]-2	IND LT-ALT OUT	
9	MSP-205R	SWI[illegible] ALT PRESENT	
8	S-1225-[illegible]1	SW-REGULATOR [illegible]	
7	S-175[illegible]-1	IND LIGHT-VOLTAGE	
6	MSP-105R	TEST SWITCH (SB146)	
5	1570129-1	VOLT SENSE ASSY	
4	1510030-1	DIODE ASSY-ALT HARN	1553016
3	S-1635-1	LUG	15[illegible]
2	C611[illegible]	VOLTAGE REGULATOR	1553016
1	C611[illegible]	ALTERNATOR	15[illegible]
ITEM NO.	PART NO.	DESCRIPTION	INSTALLED ON

EQUIPMENT TABLE

K-PB91	6		10.0	S-1367-5-13		(OPT)	
K-PB90	20		15.0	S-1367-1-6	S-1367-1-8		
K-PB89	20		40.0	S-1367-1-6	S-1493-1		
K-PB88	20		40.0	S-1367-1-6	S-1493-1		
K-PB87	20		40.0	S-1367-1-6	SOLDER		
K-PB86	20		30.0	S-1367-1-8	S-1493-1		
K-PB85	20		40.0	S-1367-1-6	SOLDER		
K-PB84	20		45.0	S-1367-1-6	S-1367-1-6		
K-PB83	20		15.0	S-1493-1	S-1367-1-8		
K-PB82	16		15.0	S-1367-2-10	S-1367-2-8		
K-PB81	20		220.0	S-1367-1-10	S-1367-1-6		
K-PB80	20		55.0	SEE PB79	S-1370-1		
K-PB79	20		55.0	S-1636-2	S-1367-1-6		
K-PB78	20		55.0	S-1636-1	S-1367-1-6		
K-PB77	20		15.0	S-1367-1-6	S-1367-1-6		
K-PB74	20		210.0	S-1367-1-6	S-1370-1		
K-PB73	20		8.0	S-1367-1-6	S-1367-1-8		
K-PB72	20		3.0	S-1367-1-12	S-1367-1-6		
K-PB71	20		5.0	S-1367-1-6	S-1367-1-6		
K-PB70	10		230.0	S-1367-3-12	S-1367-3-13		
K-PB69	10		25.0	S-1367-3-12	S-1367-3-8		
K-PB68	20		20.0	SOLDER	S-1367-1-13		
K-PB67	20		50.0	SOLDER	SOLDER		
K-PB66	20		32.0	SEE PB62	S-1370-1		
K-PB65	16		20.0	S-1367-2-10	S-1367-2-12		
K-PB64	20		28.0	S-1367-1-10	S-1367-1-6		
K-PB63	20		6.0	S-1367-1-6	S-1367-1-6		
K-PB62	20		52.0	S-1636-2	S-1367-1-6		
K-PB61	20		52.0	S-1636-1	S-1367-1-6		
K-PB58	20		60.0	S-1367-1-6	S-1370-1		
K-PB57	20		8.0	S-1367-1-6	S-1367-1-8		
K-PB56	20		3.0	S-1367-1-12	S-1367-1-6		
K-PB55	20		5.0	S-1367-1-6	S-1367-1-6		
K-PB54	6	1	38.0	[illegible]	S-1564-5-10		
K-PB53	10		12.0	S-1367-3-12	S-1367-3-8		
K-PB52	10		25.0	S-1367-3-12	S-1367-3-8		
WIRE CODE NO.	GA	MATERIAL	LG	TERMINALS			SERIALS

WIRE TABLE

CESSNA AIRCRAFT CO. COMMERCIAL AIRCRAFT DIVISION WICHITA KANSAS

	NAME	DATE
DRAWN	HARDEN	11-2-67
GROUP	[illegible]	11-2-67
CHECK	LAURIE	11-7-67
PROJ	[illegible]	11-28-67

TITLE: WIRING DIAGRAM— ALTERNATOR SYSTEM

Cessna.

DWG NO: 1570000

SUPERSEDED BY: P.4.9.3

SUPERSEDES: 1570000 PG 4.2.4

MODEL: 337C

REV.

PAGE: 4.9.1

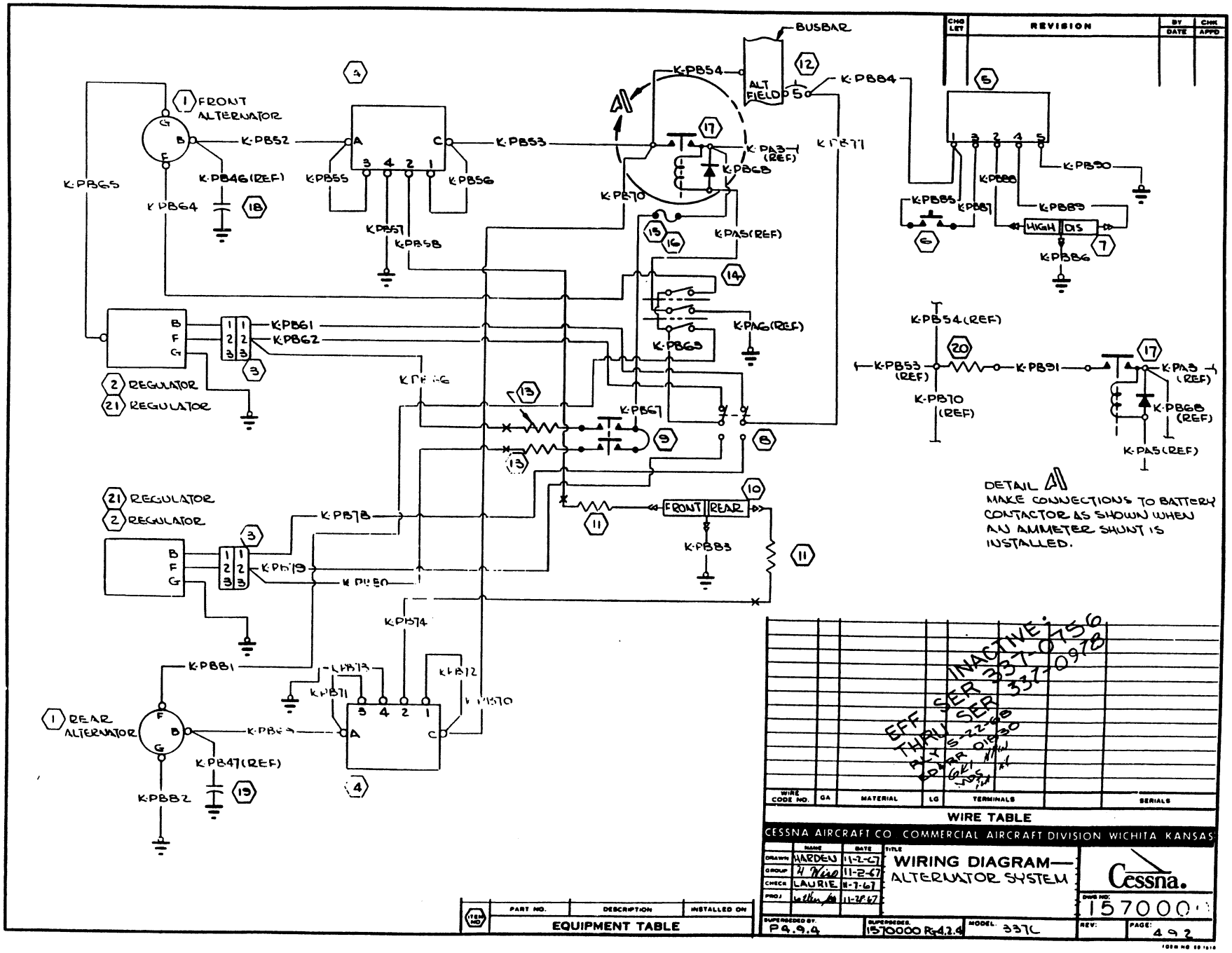
BUSBAR
ALT FIELD
FRONT ALTERNATOR
REAR ALTERNATOR
REGULATOR
K-PB52
K-PB53
K-PB54
K-PB55
K-PB56
K-PB57
K-PB58
K-PB61
K-PB62
K-PB63
K-PB64
K-PB65
K-PB66
K-PB67
K-PB68
K-PB70
K-PB71
K-PB72
K-PB73
K-PB74
K-PB77
K-PB78
K-PB79
K-PB80
K-PB81
K-PB82
K-PB83
K-PB84
K-PB85
K-PB86
K-PB87
K-PB88
K-PB89
K-PB90
K-PB91
K-PA3 (REF)
K-PA5 (REF)
K-PA6 (REF)
K-PB46 (REF)
K-PB47 (REF)
K-PB54 (REF)
K-PB70 (REF)
K-PB68 (REF)
HIGH
DIS
FRONT
REAR
DETAIL A
MAKE CONNECTIONS TO BATTERY CONTACTOR AS SHOWN WHEN AN AMMETER SHUNT IS INSTALLED.
INACTIVE: 337-0756 SER 337-0978
EFF SER THRU SER 337-0980
WIRE TABLE
CESSNA AIRCRAFT CO COMMERCIAL AIRCRAFT DIVISION WICHITA KANSAS
WIRING DIAGRAM— ALTERNATOR SYSTEM
Cessna.
DWG NO: 1570000
DRAWN HARDEN 11-2-67
GROUP 11-2-67
CHECK LAURIE 11-7-67
PROJ 11-27-67
SUPERSEDED BY P4.9.4
SUPERSEDES 1570000 R-4.2.4
MODEL 337C
REV:
PAGE: 492
EQUIPMENT TABLE
PART NO.
DESCRIPTION
INSTALLED ON
REVISION
CHG LET
BY DATE
CHK APPD

NOTES :

1. K-PB54 TO BE ALUMINUM WIRE PER S-1563-6-9

LET	DESCRIPTION	DATE	APPD
C	BY REV: ADD S-1846-2-3, S-1847-2-2 & DETAIL B; ED RR 10494 (SR6033) IX	JEL 8-15-69	RCA MDS
D	BY REV: SER OUT C611501-0201 & SER IN C611501-0203 ED & RR 10615 (SR6292)	JDR 10/23/69	JWH MDS
E	BY REV: C611502-203 WAS C611501-203 ED & RR 10818 (SR6292)	J.D.R 12/17/69	JWH
F	BY REV: S-1848-1 WAS S-1789-1 (ITEM 7) DELETE S-1789-2 (ITEM 10). S-1367-3-12 WAS S-1367-3-6 (K-PB52). INACTIVATE DWG.	JWH	
A	BY REV: ADD S-1846-2-1, K-PB103; K-PB61 WAS K-PB95, K-PB62 WAS K-PB96, K-PB63 WAS K-PB97, K-PB64 WAS K-PB98, K-PB77 WAS K-PB99, K-PB78 WAS K-PB100, K-PB79 WAS K-PB101, K-PB81 WAS K-PB 102 ED & RR 10022 (SR5441) IX	RBI 8-7-68	JWH MDS
B	BY REV: S-1847-2-1 WAS S-1847-1-1 EDRR 10091 (SR5441) IX	9-9-68 DGP	RCA MDS

INACTIVE JWH 1-14-72
EFF SER 337-0979 TO 12U SER 13701598

WIRE CODE NO.	GA	MATERIAL	LG	TERMINALS			SERIALS
K-PB103	20			S-1367-1-6	S-1367-1-6		
K-PB91	6		10.0	S-1367-5-13		(OPT)	
K-PB90	20		15.0	S-1367-1-6	S-1367-1-8		
K-PB89	20		40.0	S-1367-1-6	S-1493-1		
K-PB88	20		40.0	S-1367-1-6	S-1493-1		
K-PB87	20		40.0	S-1367-1-6	SOLDER		
K-PB86	20		30.0	S-1367-1-8	S-1493-1		
K-PB85	20		40.0	S-1367-1-6	SOLDER		
K-PB84	20		45.0	S-1367-1-6	S-1367-1-6		
K-PB83	20		15.0	S-1493-1	S-1367-1-8		
K-PB82	16		15.0	S-1367-2-10	S-1367-2-8		
K-PB81	20		220.0	S-1367-1-10	S-1367-1-6		
K-PB80	20		55.0	S-1636-1	S-1370-1		
K-PB79	20		55.0	S-1636-1	S-1367-1-6		
K-PB78	20		55.0	S-1636-1	S-1367-1-6		
K-PB77	20		15.0	S-1367-1-6	S-1367-1-6		
K-PB74	20		210.0	S-1367-1-6	S-1370-1		
K-PB73	20		8.0	S-1367-1-6	S-1367-1-8		
K-PB72	20		3.0	S-1367-1-12	S-1367-1-6		
K-PB71	20		5.0	S-1367-1-6	S-1367-1-6		
K-PB70	10		290.0	S-1367-3-12	S-1367-3-13		
K-PB69	10		25.0	S-1367-3-12	S-1367-3-8		
K-PB68	20		20.0	SOLDER	S-1367-1-13		
K-PB67	20		50.0	SOLDER	SOLDER		
K-PB66	20		52.0	S-1636-2	S-1370-1		
K-PB65	16		20.0	S-1367-2-10	S-1367-2-12		
K-PB64	20		65.0	S-1367-1-10	S-1367-1-6		
K-PB63	20		6.0	S-1367-1-6	S-1367-1-6		
K-PB62	20		52.0	S-1636-2	S-1367-1-6		
K-PB61	20		52.0	S-1636-1	S-1367-1-6		
K-PB58	20		60.0	S-1367-1-6	S-1370-1		
K-PB57	20		8.0	S-1367-1-6	S-1367-1-8		
K-PB56	20		3.0	S-1367-1-12	S-1367-1-6		
K-PB55	20		5.0	S-1367-1-6	S-1367-1-6		
K-PB54	6	1	38.0	S-1566-5-13	S-1564-5-10		
K-PB53	10		12.0	S-1367-3-12	S-1367-3-13		
K-PB52	10		25.0	S-1367-3-6	S-1367-3-8		

WIRE TABLE

ITEM NO.	PART NO.	DESCRIPTION
26	C611502-0203	ALTERNATOR ASSY
25	S-1847-2-2	SWITCH
24	S-1846-2-3	SWITCH
23	S-1846-2-1	ALT FIELD SWITCH
22	S-1638-2	HOUSING-CAP
21	C611002-0102	REGULATOR ASSY
20	22370-60	SHUNT (0B124)
19	0770038-9	CONDENSER ASSY
18	0770038-8	CONDENSER ASSY
17	S-1580-1	BAT CONTACTOR
16	S-1090-2	FUSEHOLDER
15	S-1091-5	FUSE
14	S-1844-1-1	SWITCH-MASTER
13	62Ω, 1 WATT	RESISTOR
12	S-1360-5	CIRCUIT BREAKER
11	300 OHM 1/2 W	RESISTOR
10		
9	S-1890-1	SW-ALT RESTART
8	S-1847-2-1	SW-REGULATOR SELECTOR
7	S-1848-1	IND LIGHT
6	S-1889-1	TEST SWITCH
5	1570129-1	SENSING ASSY
4	1570090-1	DIODE ASSY-ALT WARN
3	S-1638-1	HOUSING-PLUG
2	C611002-0105	REGULATOR ASSY
1	C611502-0201	ALTERNATOR ASSY

EQUIPMENT TABLE

CES-1000 IS APPLICABLE
VENDOR CODES PER S-1400
CES-XXXX=CESSNA SPEC. NO.
S-XXX OR CMXXXX=CESSNA STD. NO.

SUPERSEDES: P 4.9.1
SUPERSEDED BY: PAGE 4.9.5

CONTRACT NO:

	NAME	DATE
DESIGN	W. Ackemann	5-28-68
GROUP	H. Wilson	5-27-68
DRAWN	YOUNGERS	5-22-68
CHECK	G. IRVIN	5-25-68
STRESS	ASHER	5-27-68
PROJECT		
APPD	SWANEY	5-25-68

Cessna AIRCRAFT CO.
COMMERCIAL AIRCRAFT DIV.
5800 E. PAWNEE
WICHITA, KANSAS

TITLE
WIRING DIAGRAM — ALTERNATOR SYSTEM

SIZE C | CODE IDENT. NO. 71379 | DWG NO. 1570000
SCALE: NONE | 337 | PAGE 4.9.3

ED & RR 01830 (SCR 337-0979 & ON)

FORM NO. 00-215A

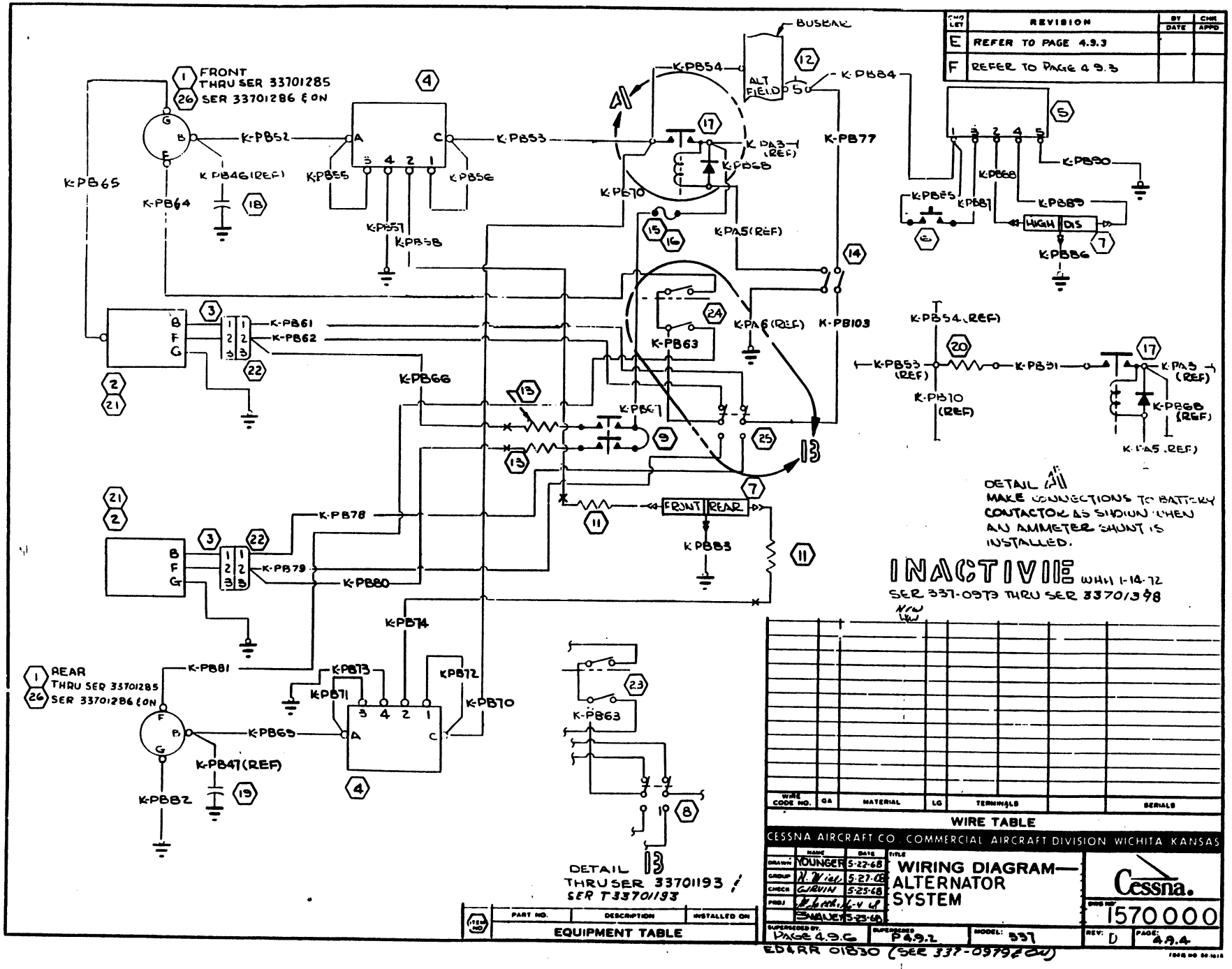
FRONT THRU SER 33701285 SER 33701286 & ON
REAR THRU SER 33701285 SER 33701286 & ON
BUSBAR
ALT FIELD
K-PB54
K-PB84
K-PB77
K-PB52
K-PB53
K-PB46(REF)
K-PB64
K-PB65
K-PB55
K-PB56
K-PB57
K-PB58
K-PB70
K-PA3 (REF)
K-PB68
K-PA5(REF)
K-PB103
K-PB63
K-PA6(REF)
K-PB61
K-PB62
K-PB66
K-PB67
K-PB78
K-PB79
K-PB80
K-PB81
K-PB74
K-PB73
K-PB71
K-PB72
K-PB47(REF)
K-PB82
K-PB90
K-PB89
K-PB86
K-PB85
K-PB87
HIGH DIS
FRONT REAR
K-PB83
K-PB54 (REF)
K-PB53 (REF)
K-PB51
K-PB10 (REF)
K-PA3 (REF)
K-PB68 (REF)
K-PA5 (REF)
DETAIL A
MAKE CONNECTIONS TO BATTERY CONTACTOR AS SHOWN WHEN AN AMMETER SHUNT IS INSTALLED.
INACTIVE WHH 1-14-72
SER 337-0979 THRU SER 33701398
DETAIL B
THRU SER 33701193
SER T33701193
REVISION
E REFER TO PAGE 4.9.3
F REFER TO PAGE 4.9.3
WIRE TABLE
WIRE CODE NO. GA MATERIAL LG TERMINALS SERIALS
EQUIPMENT TABLE
PART NO. DESCRIPTION INSTALLED ON
CESSNA AIRCRAFT CO. COMMERCIAL AIRCRAFT DIVISION WICHITA KANSAS
WIRING DIAGRAM—ALTERNATOR SYSTEM
Cessna.
1570000
SUPERSEDED BY PAGE 4.9.6
SUPERSEDES P4.9.2
MODEL: 337
REV: D
PAGE: 4.9.4
ED&RR 01830 (SER 337-0979 & ON)

NOTES:

1. K-PB54 TO BE ALUMINUM WIRE PER S-1563-6-9.
2. TERMINATE IN S-1636-1 WITH K-PB108 WIRE.
3. TERMINATE IN S-1636-1 WITH K-PB115 WIRE.
4. TVA 1315 CAPACITOR TO BE INSTALLED AS SHOWN SER 33701428 & ON.

INACTIVE
EFF SER 33701399
THRU 33701462

REVISION			
LET	DESCRIPTION	DATE	APPD

WIRE CODE NO	GA	MATERIAL	LG	TERMINALS			SERIALS
K-PB124	20			SOLDER	S-1367-1-8		
123	20			S-1370-1	3		
122	20			S-1370-1	2		
121	20			SOLDER	S-1370-1		
120	20			S-1636-1	S-1367-1-8		
119	20			S-1636-1	SOLDER		
118	20			S-1636-1	SOLDER		
117	20			S-1636-1	S-1493-1		
116	20			S-1636-1	S-1493-1		
115	20			S-1636-1	S-1367-1-10		
114	20			S-1493-1	S-1636-1		
113	20			S-1636-1	S-1493-1		
112	20			S-1367-1-6	S-1636-1		
111	20			S-1367-1-6	S-1370-1		
110	10			S-1367-3-12	S-1367-3-13		
109	10			S-1367-3-12	S-1367-3-8		
108	20			S-1636-1	S-1367-1-10		
107	20			S-1493-1	S-1636-1		
106	20			S-1636-1	S-1493-1		
K-PB105	20			S-1367-1-6	S-1636-1		
K-PB86	20		30.0	S-1367-1-8	S-1493-1		
83	20		15.0	S-1493-1	S-1367-1-8		
82	16		15.0	S-1367-2-10	S-1367-2-8		
72	20		5.0	S-1367-1-12	S-1367-1-6		
71	20		5.0	S-1367-1-6	S-1367-1-6		
65	16		20.0	S-1367-2-10	S-1367-2-12		
58	20		60.0	S-1367-1-6	S-1370-1		
57	20		8.0	S-1367-1-6	S-1367-1-8		
56	20		3.0	S-1367-1-12	S-1367-1-6		
55	20		5.0	S-1367-1-6	S-1367-1-6		
54	6	1	38.0	S-1564-5-13	S-1564-5-10		
53	10		12.0	S-1367-3-12	S-1367-3-13		
K-PB52	10		25.0	S-1367-3-12	S-1367-3-8		

WIRE TABLE

ITEM NO	PART NO.	DESCRIPTION	VENDOR
23	TVA1315	CAPACITOR	(56289)
22	SFE 14	FUSE	(71400)
21	ND.176	BATTERY HOLDER	(91833)
20	0770038-9	CONDENSER ASSY	
19	0770038-8	CONDENSER ASSY	
18	S-1844-1-1	SWITCH-MASTER	
17	22370-60	SHUNT	(08124)
16	S-1638-1	HOUSING-CAP	
15	S-1580-1	BAT. CONTACTOR	
14	S-1360-5	CIRCUIT BREAKER	
13	620HM, 1 WATT	RESISTOR	
12	F-4	DIODE	(84970)
11	E-94	BATTERY-ALT. PRIME	
10	S-1890-1	SW.-ALT. RESTART	
9	12 OHM, 1 WATT	RESISTOR	
8	S-1994-2-1	SWITCH-ALT FIELD	
7	S-1848-1	INDICATOR LIGHT	
6	S-1641-9	HOUSING-SOCKET	
5	S-1889-1	TEST SWITCH	
4	MODEL0414	TRIPOUT SENSOR	(54405)
3	1570059-1	DIODE ASSY-ALT. WARN	
2	C611002-0105	REGULATOR ASSY	
1	C611502-0203	ALTERNATOR ASSY	

EQUIPMENT TABLE

WIRE CODE NO	GA	MATERIAL	LG	TERMINALS			SERIALS
K-PB131	20			S-1367-1-6	S-1493-1		
K-PB130	16			S-1367-2-6	S-1367-2-6		
129	20			S-1367-1-6	S-1367-1-6		
128	20			S-1367-1-6	S-1367-1-6		
127	16			S-1367-2-6	S-1367-2-6		
126	20			S-1367-1-6	S-1367-1-6		
K-PB125	20			S-1367-1-6	S-1493-1		

WIRE TABLE

CES-1000 IS APPLICABLE
VENDOR CODES PER S-1400
CES-XXXX=CESSNA SPEC. NO.
S-XXX OR CMXXXX=CESSNA STD. NO.

SUPERSEDES: PAGE 4.9.3

SUPERSEDED BY:

CONTRACT NO:

	NAME	DATE
DESIGN	HARDEN	1-14-72
GROUP	H. Wise	1-14-72
DRAWN	HARDEN	1-14-72
CHECK	L.Y. WHITE	1-17-72
STRESS		
PROJ	[illegible]	1-17-72
APPD		
OTHER		

Cessna. AIRCRAFT CO.
COMMERCIAL AIRCRAFT DIV.
5800 E. PAWNEE
WICHITA, KANSAS

TITLE
WIRING DIAGRAM — ALTERNATOR SYSTEM

SIZE	CODE IDENT. NO.	DWG NO
C	71379	1570000

SCALE: NONE | 337 | PAGE: 4.9.5

SER(SRG773)(REF)

FORM NO 80-2158

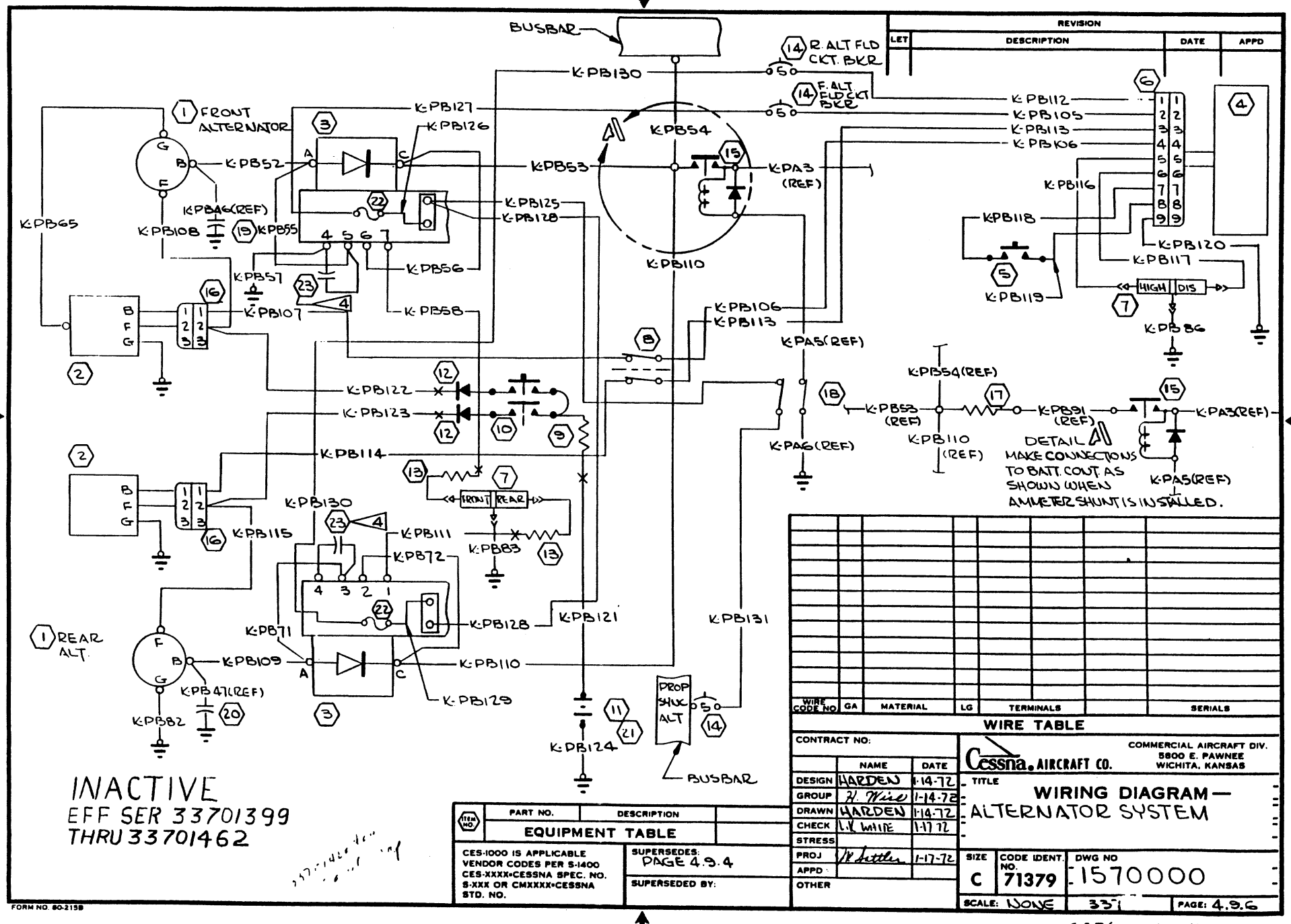
BUSBAR
K-PB130
R. ALT FLD CKT. BKR
F. ALT FLD CKT BKR
FRONT ALTERNATOR
K-PB127
K-PB126
K-PB52
K-PB53
K-PB54
K-PA3 (REF)
K-PB112
K-PB105
K-PB113
K-PB106
K-PB116
K-PB118
K-PB119
K-PB120
K-PB117
HIGH
DIS
K-PB86
K-PB65
K-PB108
K-PB55
K-PB125
K-PB128
K-PB56
K-PB57
K-PB107
K-PB58
K-PB110
K-PA5(REF)
K-PB122
K-PB123
K-PB114
K-PB115
K-PB130
K-PB111
FRONT
REAR
K-PB83
K-PB72
K-PB71
K-PB128
K-PB121
K-PB131
REAR ALT.
K-PB109
K-PB110
K-PB129
K-PB47(REF)
K-PB82
K-PB124
PROP SHUT ALT
BUSBAR
K-PB54(REF)
K-PB53 (REF)
K-PB110 (REF)
K-PB91 (REF)
K-PA3(REF)
K-PA6(REF)
DETAIL A
MAKE CONNECTIONS TO BATT. CONT. AS SHOWN WHEN AMMETER SHUNT IS INSTALLED.
INACTIVE
EFF SER 33701399
THRU 33701462
REVISION
LET
DESCRIPTION
DATE
APPD
WIRE CODE NO
GA
MATERIAL
LG
TERMINALS
SERIALS
WIRE TABLE
CONTRACT NO:
NAME
DATE
DESIGN
GROUP
DRAWN
CHECK
STRESS
PROJ
APPD
OTHER
HARDEN
1-14-72
1-14-72
1-17-72
Cessna AIRCRAFT CO.
COMMERCIAL AIRCRAFT DIV.
5800 E. PAWNEE
WICHITA, KANSAS
TITLE
WIRING DIAGRAM — ALTERNATOR SYSTEM
SIZE
C
CODE IDENT. NO.
71379
DWG NO
1570000
SCALE: NONE
PAGE: 4.9.6
PART NO.
DESCRIPTION
ITEM NO.
EQUIPMENT TABLE
CES-1000 IS APPLICABLE
VENDOR CODES PER S-1400
CES-XXXX-CESSNA SPEC. NO.
S-XXX OR CMXXXX-CESSNA
STD. NO.
SUPERSEDES:
PAGE 4.9.4
SUPERSEDED BY:
FORM NO. 80-215B
SER(SRG773 XREF)