| CHG LET | REVISION | BY / DATE | CHK / APPD |
|---|---|---|---|
| A | IN B/M: ALL 20 GAUGE SHIELDED WIRES CHANGED TO 18 GA. SHIELDED. ON K-JA1 K-JA2 K-JA4 & K-JA5 WIRES S-1367-1-10 WAS S-1367-1-6. ADDED DETAIL A. NOTE 5 FIT 105 3/16 & FIT 105 1/8 (SR4751) | | |

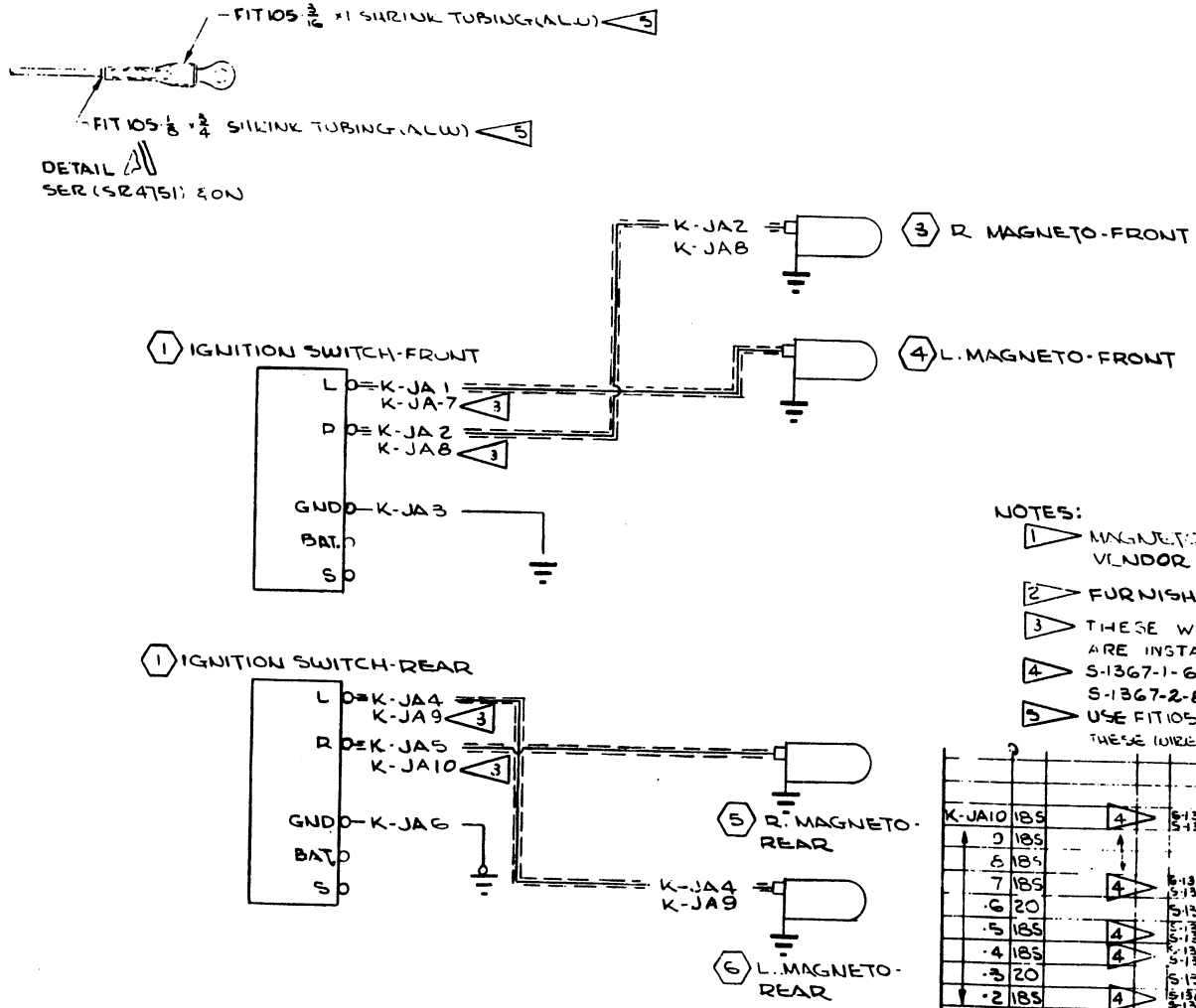


INACTIVE: EFF THRU SER 33701462

NOTES:

1. MAGNETO "P" LEAD CONNECTORS ARE VENDOR SUPPLIED.
2. FURNISHED WITH ENGINES.
3. THESE WIRES TO BE USED WHEN NO MAG FILTERS ARE INSTALLED.
4. S-1367-1-6 FOR CENTER CONDUCTOR, S-1367-2-8 FOR GROUNDING SHIELDING.
5. USE FIT 105-3/16 & FIT 105-1/8 TUBING AT THE END OF EACH OF THESE WIRES THAT ATTACHES TO THE MAG FILTER. REF DETAIL A.

| WIRE CODE NO | GA | MATERIAL | LG | TERMINALS | | | SERIALS |
|---|---|---|---|---|---|---|---|
| K-JA10 | 18S | 4 | | S-1367-1-6 S-1367-2-8 | 1 | | |
| 9 | 18S | | | | | | |
| 8 | 18S | | | | | | |
| 7 | 18S | 4 | | S-1367-1-6 S-1367-2-8 | 1 | | |
| 6 | 20 | | | S-1367-1-8 | S-1367-1-8 | | |
| 5 | 18S | 4 | | S-1367-1-6 S-1367-2-8 | S-1367-1-10 S-1367-2-8 | 5 | |
| 4 | 18S | 4 | | S-1367-1-6 S-1367-2-8 | S-1367-1-10 S-1367-2-8 | 5 | |
| 3 | 20 | | | S-1367-1-8 | S-1367-1-8 | | |
| 2 | 18S | 4 | | S-1367-1-6 S-1367-2-8 | S-1367-1-10 S-1367-2-8 | 5 | |
| K-JA1 | 18S | 4 | | S-1367-1-6 S-1367-2-8 | S-1367-1-10 S-1367-2-8 | 5 | |

WIRE TABLE

| ITEM NO | PART NO | DESCRIPTION | INSTALLED ON |
|---|---|---|---|
| 6 | 2 | L MAG REAR | |
| 5 | | R MAG REAR | |
| 4 | | L. MAG. FRONT | |
| 3 | 2 | R MAG. FRONT | |
| 2 | | | |
| 1 | S-1406-1 | IGN. SW. FRONT | 1513611 |

EQUIPMENT TABLE

CESSNA AIRCRAFT CO. COMMERCIAL AIRCRAFT DIVISION WICHITA KANSAS

| | NAME | DATE |
|---|---|---|
| DRAWN | HARDEN | 18-64 |
| GROUP | | |
| CHECK | [illegible] | 5-64 |
| PROJ | [illegible] | 7-14-64 |
| | [illegible] | 8-16-64 |

TITLE: WIRING DIAGRAM — IGNITION SYSTEM

Cessna.

DWG NO 1570000

SUPERSEDED BY | SUPERSEDES | MODEL 337 | REV A | PAGE 5.1