NOTES:

1. 60215-4 TERMINAL, VENDOR IS 02660.

REVISIONS			
LTR	DESCRIPTION	DATE	APPROVED
A	BY REV: ADD S-1640-6, S-1641-6, K-EB29, K-EB30, K-EB31, K-EB32, K-EB33, K-EB34. ON CLUSTER PLUG: PIN 4 WAS PIN 3 PIN 6 WAS PIN 5 ADDED DETAIL A & K-EB37 THRU K-EB42 WIRES & USH-5W SWITCH; INACTIVATE K-EB29 THRU K-EB34 (ED&RR 00934) SER 337-0814	RLY 11-15-67 WHH 12-6-67	RLL

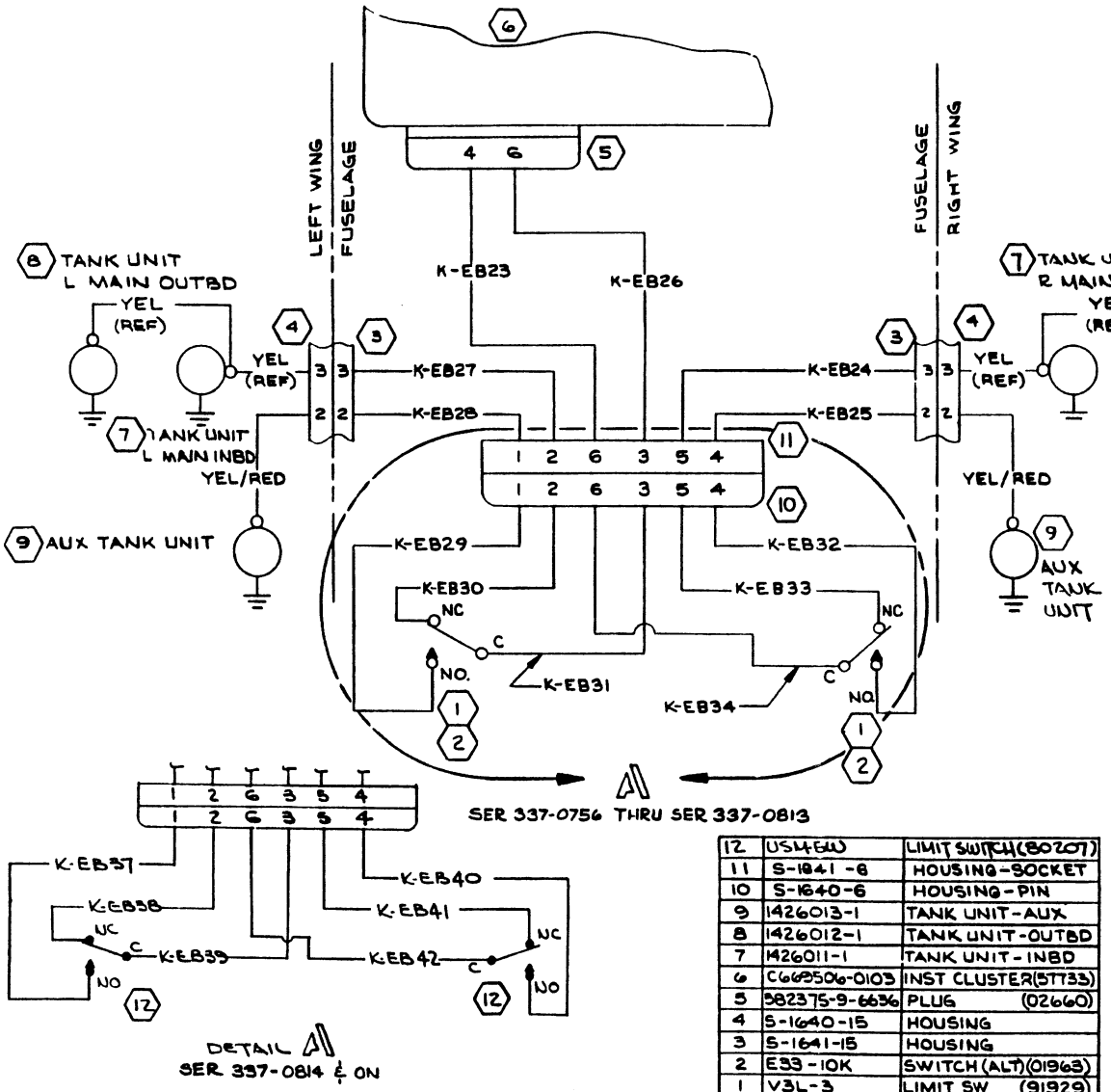

ITEM NO.	PART NO.	DESCRIPTION
12	USH-5W	LIMIT SWITCH (80207)
11	S-1641-6	HOUSING-SOCKET
10	S-1640-6	HOUSING-PIN
9	1426013-1	TANK UNIT-AUX
8	1426012-1	TANK UNIT-OUTBD
7	1426011-1	TANK UNIT-INBD
6	C6685006-0103	INST CLUSTER (5T733)
5	582375-9-6636	PLUG (02660)
4	S-1640-15	HOUSING
3	S-1641-15	HOUSING
2	E33-10K	SWITCH (ALT) (01963)
1	V3L-3	LIMIT SW (91929)

EQUIPMENT TABLE

WIRE CODE NO.	GA	MATERIAL	LG	TERMINALS				SERIALS
K-EB42	20			SOLDER	S-1635-1			SER 337-0814 & ON
41								
40								
39								
38								
K-EB37				SOLDER	S-1635-1			SER 337-0814 & ON
YEL/RED	20		46.0	S-1635-1	S-1637-1-10			
YEL/RED	20		46.0	S-1635-1	S-1637-1-10			
K-EB34	20			S-1367-1-4	S-1635-1	INACTIVE		SER 337-0756 THRU SER 337-0813
33				S-1367-1-4	S-1635-1			
32				S-1367-1-4	S-1635-1			
31				S-1367-1-4	S-1635-1			
30				S-1367-1-4	S-1635-1			
29				S-1367-1-4	S-1635-1	INACTIVE		SER 337-0756 THRU SER 337-0813
28				S-1367-1-4	S-1636-1			
27				S-1367-1-4	S-1636-1			
26				1	S-1367-1-4			
25				S-1367-1-4	S-1636-1			
24				S-1367-1-4	S-1636-1			
K-EB23	20			1	S-1367-1-4			

WIRE TABLE

CONTRACT NO:

	NAME	DATE
DESIGN	HARDEN	6-30-67
GROUP	[illegible]	6-30-67
DRAWN	HARRIS	6-12-67
CHECK	YAKSHAW	6-22-67
STRESS	[illegible]	6-27-67
PROJECT	[illegible]	7-1-67
APPD	[illegible]	6-27-67

SUPERSEDED BY: P 8.12.0, 8.12.1 & 8.12.2

Cessna AIRCRAFT CO.
COMMERCIAL AIRCRAFT DIV.
5800 E. PAWNEE
WICHITA, KANSAS

TITLE: WIRING DIAGRAM — FUEL QUANTITY INDICATOR SYSTEM MAIN & AUX (OPT)

SIZE: C | CODE IDENT. NO.: 71379 | DWG NO.: 1570000

SCALE: NONE | (SR 5095) IX | PAGE: 8.10

FORM NO 80-215