NOTES:

1. ~~S-1637-2 HOUSING-PLUG & S-1636-1 SOCKET~~
2. ~~S-1637-1 HOUSING-CAP & S-1635-1 PIN~~
3. RESISTOR VALUE TO BE DETERMINED ON FIRST INSTALLATION, VALUE WILL BE BETWEEN 100 & 300 OHM, 1 WATT
4. WIRES TO BE 8529 BELDEN (70903)
5. CONTACTS WITH SINGLE JUMPER WIRE ARE TO BE S-1636-1 SOCKET.
6. CONTACTS WITH TWO JUMPER WIRES ARE TO BE S-1636-2 SOCKET.

INACTIVE: EFF SER 337-0979 THRU 33701462

REVISION

LET	DESCRIPTION	DATE	APPD
E	BY REV: ADD YEL (1 THRU 5) & BLK (1 THRU 5) FLOOD LIGHTS IN GLARE SHIELD (REF DETAIL C). ADD K-LB78. MAKE INSTR CLUSTER LIGHTS STANDARD (DETAIL D) (SR6748)	11-9-70 WHH	WW DKM

REVISION

LET	DESCRIPTION	DATE	APPD
A	BY REV: ADD K-LA22, K-LA23, K-LA24, FLOOD LITES IN GLARE SHLD, GLARE SHLD RADIO COMPASS, FUEL SEL LTS & E.L. PNL LTS., S-1657-1, S-1637-2; DELETE ITEM 5, NOTES 1 & 2; 1570166-1 WAS 1570164-1, C613001-0101 WAS 804134-01, S-1635-1 WAS NOTE 1, S-1636-1 WAS NOTE 2; S-1635-1 WAS S-1635-2 ED & RR 10019 (SR 5441) IX	EGY	GKI MDS WHH
B	BY REV: ADD K-LB73 & K-LB74; ADD 7-08 & GE313 TO FIELD ONLY ED & RR 10513 SER 337-0979 & ON	SEM 5-7-69	RLY MDS DKM
C	BY REV: SER IN K-LB75 & SER OUT K-LB62; ADD DETAIL "A" ED & RR 10726 (SR 6033) IX	SEM	RLY MDS LDJ
D	BY REV: ADD DETAIL "B" & P 11.11.2 ED & RR 10755 SER 33701199 & ON	DGP 4-14-69	MDS APV

WIRE CODE NO.	GA	MATERIAL	LG	TERMINALS			SERIALS
BLK(5)	22			S-1636-2	S-1367-1-8		SER 33701317 & ON
BLK(4)	22			S-1370-0	S-1636-1		
BLK(3)	22			S-1370-0	S-1635-1		
BLK(2)	22			S-1370-0	S-1635-1		
BLK(1)	22			S-1370-0	S-1635-1		
YEL(5)	20			S-1636-2	S-1636-1		
YEL(4)	20			S-1370-0	S-1635-1		
YEL(3)	20			S-1370-0	S-1635-1		
YEL(2)	20			S-1370-0	S-1635-1		
YEL(1)	20			S-1370-0	S-1635-1		SER 33701317 & ON
K-LB78	22			SOLDER	S-341-2		(SR6748) & ON
K-LB77	22			S-1636-1	S-1636-1	(OPT)	SER 33701194
K-LB76	22			S-1635-1	S-1636-1	(OPT)	SER 33701194
BLK(2)	22	4		SOLDER	S-1367-1-8	(OPT)	SER 33701194
BLK(1)	22	4		SOLDER	S-1367-1-8	(OPT)	SER 33701194
RED(2)	22	4		S-1635-1	SOLDER	(OPT)	SER 33701194
RED(1)	22	4		S-1635-1	SOLDER	(OPT)	SER 33701194
K-LB75	22			SOLDER	S-1635-1		(SR 6033) & ON
K-LB74	22			SOLDER	SOLDER		THRU SER 33701316
K-LB73	22			SOLDER	SOLDER		THRU SER 33701316
K-LA24	22			S-1636-1	S-1635-1		
K-LA23	22			S-1635-1	S-341-2		
K-LA22	22			S-1636-1	S-1636-1		
YEL	20	20-4		SOLDER	S-1636-1		
K-LB72	22			SOLDER	S-1636-1		
K-LB71	22			S-1635-1	S-1367-1-8		THRU SER 33701316
K-LB70	22			SOLDER	S-1636-1		THRU SER 33701316
WHT (2)	22	22-9		S-1636-1	SOLDER		
WHT (1)	22	22-9		S-1636-1	SOLDER		
RED	16	16-2		S-1636-8	SOLDER		
BRN(2)	16	16-1		SOLDER	S-1636-1		
BRN(1)	16	16-1		SOLDER	S-1636-1		
K-LB67	22			SOLDER	SOLDER		
K-LB66	22			SOLDER	SOLDER		
K-LB65	22			S-1635-1	S-1367-1-8		

ITEM NO.	PART NO.	DESCRIPTION	VENDOR
29			
28	1213319-9	LIGHT ASSY	
27	S-1640-9	HOUSING-PIN	
26	S-1641-9	HOUSING-SOCKET	
25	C6695060204	INSTR. CLUSTER	
24	S-1941-1	FILTER	
23	S-1894-4	BULB	(24446)
22	25-240XP16	LAMP HOLDER	(95263)
21	S-1899-3G	LIGHT ASSY	(OPT)
20	S-1899-4G	LIGHT ASSY	(OPT)
19	S-1637-1	HOUSING-CAP	
18	S-1637-2	HOUSING-PLUG	
17	MS-25237-327	BULB	
16	C660501-0102	COMPASS ASSY	
15	GE 313	BULB	(24446)
14	VM800-2	LAMP ASSY	(98625)
13	1513739-1	SWITCH PANEL	
12	1513740-1	HEATER PANEL	
11	1513741-1	WING FLAP PANEL	
10	C613001-0101	POWER SUPPLY	
9	7-08	SOCKET	(72619)
8	1570164-1	SWITCH ASSY	
7	9082-GH	POTENTIOMETER	(71450)
6	3.	RESISTOR	
5			
4	S-1640-6	HOUSING-SOCKET	
3	S-1641-6	HOUSING-PIN	
2	1570166-1	DIMMING ASSY	
1	S-1360-5	CIRCUIT BREAKER	

EQUIPMENT TABLE

WIRE CODE NO.	GA	MATERIAL	LG	TERMINALS			SERIALS
K-LB64	22			SOLDER	S-1636-1		
K-LB63	22			S-1635-1	SOLDER		
K-LB62	22			S-1636-1	S-1635-1		THRU (SR6033)
K-LB61	22			SEE K-LB60	S-1370-1		
K-LB60	22			SEE K-LB59	S-1370-2		
K-LB59	22			S-1370-1	S-1370-2		
K-LB58	22			S-1635-1	S-1370-1		
K-LB57	22			S-1635-1	S-1636-1		
K-LB56	22			SOLDER	S-1635-1		
K-LB55	22			SOLDER	SOLDER		
K-LB54	22			S-1635-1	SOLDER		THRU SER 33701316
K-LB53	22			S-1635-1	SOLDER		
K-LB52	22			SOLDER	S-1635-1		
K-LB51	16			S-1367-1-8	SOLDER		
K-LB50	20			S-1367-1-8	S-1635-1		
K-LB31	22			S-341-2	S-1367-1-8		
K-LB17				SOLDER	S-341-2		
K-LB8					SOLDER		THRU SER 33701316
K-LB7							
K-LB6							
K-LB5							
K-LB4							
K-LB3	22			SOLDER	SOLDER		THRU SER 33701316

WIRE TABLE

CES-1000 IS APPLICABLE
VENDOR CODES PER S-1400
CES-XXXX=CESSNA SPEC. NO.
S-XXX OR CMXXXX=CESSNA STD. NO.

SUPERSEDES:

SUPERSEDED BY:

CONTRACT NO:

	NAME	DATE
DESIGN	HARDEN	4-26-68
GROUP	H. Wan	4-3-68
DRAWN	C. GARCIA	4-1-68
CHECK	G. IRVIN	4-2-68
STRESS	DK McCook	4-2-68
PROJECT	[illegible]	4-30-68
APPD	D. WANEY	4-2-68

Cessna AIRCRAFT CO.
COMMERCIAL AIRCRAFT DIV.
5800 E. PAWNEE
WICHITA, KANSAS

TITLE
WIRING DIAGRAM — LIGHT DIMMING, DUAL TRANSISTORIZED

SIZE	CODE IDENT NO.	DWG NO.
C	71379	1570000

SCALE: NONE | 337 | PAGE: 11.11.0

ED & RR 01367 (SER 337-0979 & ON)

FORM NO 60-213A

REVISION			
LET	DESCRIPTION	DATE	APPD
E	REFER TO PAGE 11.11.0		

INACTIVE EFF SER 337-0979 THRU 33701462

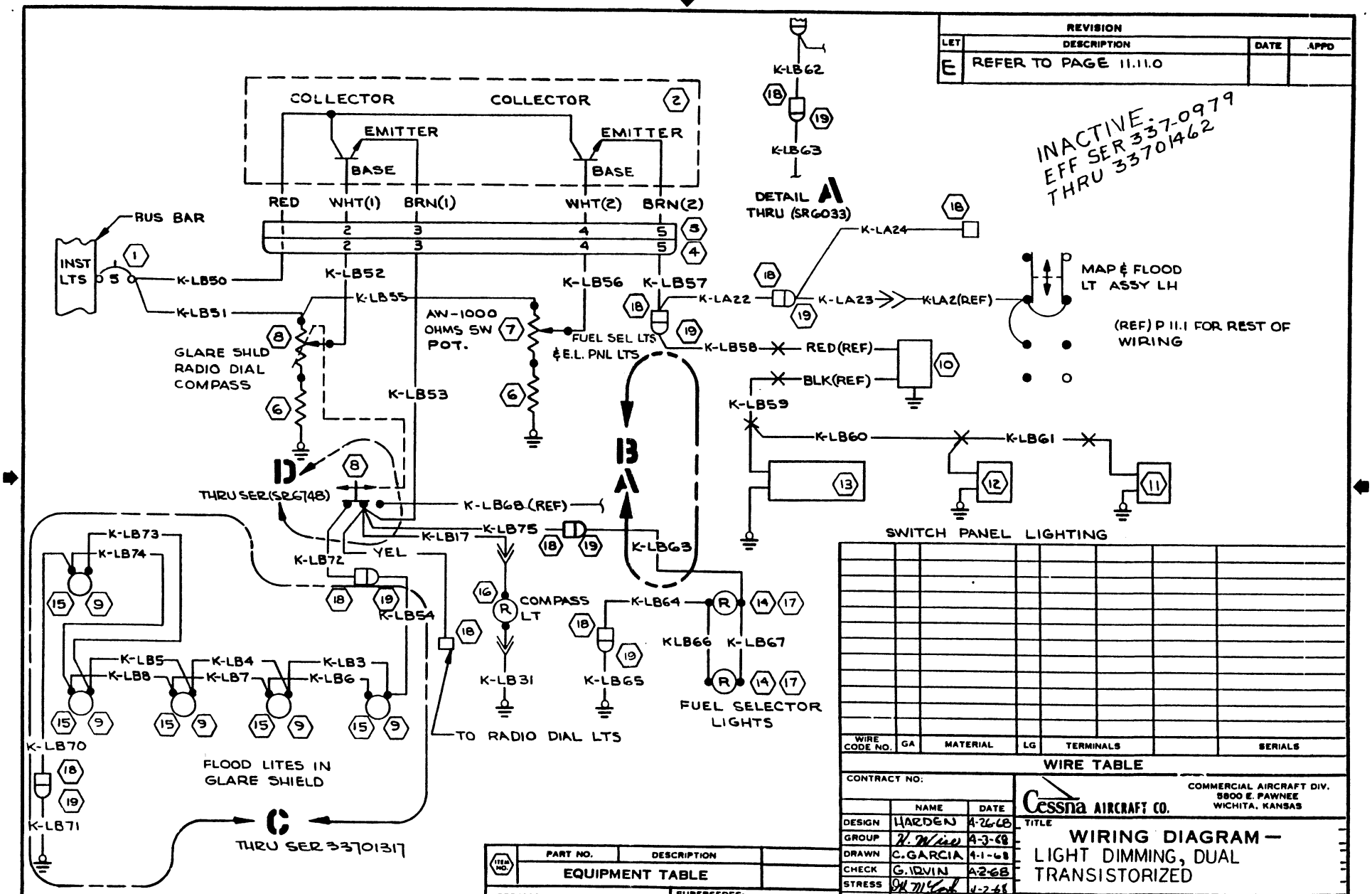

WIRE CODE NO.	GA	MATERIAL	LG	TERMINALS		SERIALS

WIRE TABLE

ITEM NO.	PART NO.	DESCRIPTION

EQUIPMENT TABLE

CES-1000 IS APPLICABLE VENDOR CODES PER S-1400
CES-XXXX=CESSNA SPEC. NO.
S-XXX OR CMXXXX=CESSNA STD. NO.

SUPERSEDES:

SUPERSEDED BY:

CONTRACT NO:

	NAME	DATE
DESIGN	HARDEN	4-26-68
GROUP	H. Wise	4-3-68
DRAWN	C. GARCIA	4-1-68
CHECK	G. IRVIN	4-2-68
STRESS	[illegible]	4-2-68
PROJECT	[illegible]	1-15-68
APPD	SWANEY	4-2-68

Cessna AIRCRAFT CO.
COMMERCIAL AIRCRAFT DIV.
5800 E. PAWNEE
WICHITA, KANSAS

TITLE
WIRING DIAGRAM — LIGHT DIMMING, DUAL TRANSISTORIZED

SIZE C | CODE IDENT. NO. 71379 | DWG NO. 1570000

SCALE: NONE | 337 | PAGE: 11.11.1

FORM NO. 00-215A

ED&RR 01367 (SER 337-0979 & ON)

REVISION			
LET	DESCRIPTION	DATE	APPD
E	REFER TO PAGE 11.11.0		

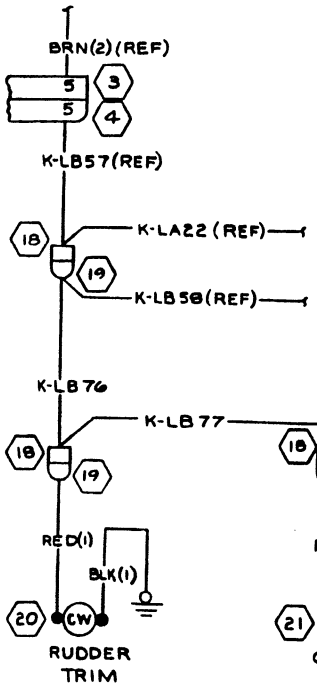

DETAIL B
SER(SR6033) & ON (3370119 4 & ON AND F33700001 & ON)
(OPTIONAL WITH POST LIGHTS)

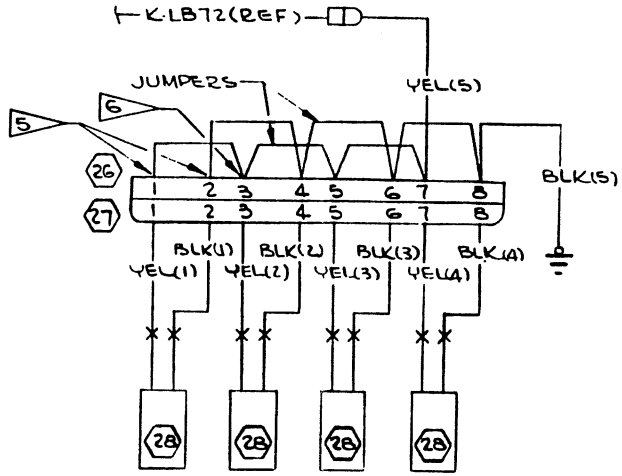

FLOOD LIGHTS IN GLARE SHIELD

DETAIL C
SER 3370131 7 & ON

INACTIVE:
EFF SER 3370119 4
THRU 3370146 2

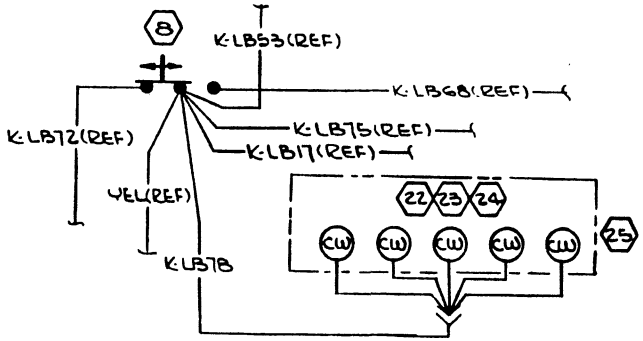

DETAIL D
SER(SR6748) & ON
(3370138 0 & ON AND
F33700041 & ON)

WIRE CODE NO	GA	MATERIAL	LG	TERMINALS		SERIALS

WIRE TABLE

ITEM NO	PART NO.	DESCRIPTION

EQUIPMENT TABLE

CES-1000 IS APPLICABLE
VENDOR CODES PER S-1400
CES-XXXX-CESSNA SPEC. NO.
S-XXX OR CMXXXX-CESSNA STD. NO.

SUPERSEDES.

SUPERSEDED BY:

CONTRACT NO:

	NAME	DATE
DESIGN		
GROUP		
DRAWN	D.G. PLAIN	10/14/69
CHECK	HARRIS	10-14-69
STRESS	L. P. VANDYKE	10-15-69
PROJ		10-16-69
APPD		10-15-69
OTHER		

Cessna AIRCRAFT CO.
COMMERCIAL AIRCRAFT DIV.
5800 E. PAWNEE
WICHITA, KANSAS

TITLE
WIRING DIAGRAM — LIGHT DIMMING, DUAL TRANSISTORIZED

SIZE	CODE IDENT NO.	DWG NO
C	71379	1570000

SCALE: NONE | 337 | PAGE: 11.11.2

ED&RR 10755 SER 3370119 4 & ON

FORM NO 80-2159