NOTES:

[1] S-1637-1 HOUSING-CAP & S-1635-1 PIN
[2] S-1637-2 HOUSING-PLUG & S-1636-1 SOCKET

REVISION			
LET	DESCRIPTION	DATE	APPD

INACTIVE 4/w WHH 1-15-71
EFF THRU SER (SRG748)
337-0979 THRU 33701379 AND
F33700001 THRU F33700040

WIRE CODE NO	GA	MATERIAL	LA	TERMINALS			
K-LB45	22			[1]	SOLDER		
BLK				SOLDER	S-1367-1-8		
BLK					[2]		
BLK					[2]		
BLK					SOLDER		
BLK							
BLK							
BLK							
BLK							
BLK							
BLK							
BLK							
BLK							
BLK							
BLK							
BLK							
BLK							
BLK							
BLK							
BLK							
BLK							
BLK							
BLK							
BLK							
BLK							
BLK							
BLK					SOLDER		
RED/WHT				SOLDER	[2]		
RED/WHT				[1]	SOLDER		
RED/WHT				[1]			
RED/WHT				SOLDER			
RED/WHT							
RED/WHT							
RED/WHT							
RED/WHT							
RED/WHT							
RED/WHT							
RED/WHT	22			SOLDER	SOLDER		

ITEM NO	PART NO.	DESCRIPTION	VENDOR
8	1813/2LWI	FILTER	(APMH)
7	334	BULB	(24446)
6	25-243XP16	LAMPHOLDER	(95263)
5	1570164-1	SWITCH ASSY	
4	C669503-0101	INST CLUSTER	
3	GB5952-CW-28	LIGHT ASSY	(07204)
2	5952-3RH-CW-28	LIGHT ASSY	(07204)
1	5952-3LH-CW-28	LIGHT ASSY	(07204)

EQUIPMENT TABLE

CES-1000 IS APPLICABLE
VENDOR CODES PER S-1400
CES-XXXX=CESSNA SPEC. NO.
S-XXX OR CMXXXX=CESSNA STD. NO.

SUPERSEDES: 1570000 P 11.1.1
SUPERSEDED BY: 1570000 PG 11.12.2

WIRE CODE NO.	GA	MATERIAL	LG	TERMINALS			SERIALS
RED/WHT	22			SOLDER	SOLDER		
RED/WHT							
RED/WHT							
RED/WHT							
RED/WHT							
RED/WHT							
RED/WHT							
RED/WHT							
RED/WHT							
RED/WHT							
RED/WHT							
RED/WHT							
RED/WHT							
RED/WHT							
RED/WHT							
RED/WHT					SOLDER		
K-LB69					[2]		
K-LB68					[2]		
K-LB47				SOLDER	[2]		
K-LB46				[1]	S-1370-1		
K-LB73				SEE LB69	S-341-2		
K-LB35				[1]	S-1367-1-8		
K-LB33	22			[1]	S-1367-1-8		

WIRE TABLE

CONTRACT NO:

	NAME	DATE
DESIGN	HARDEN	4-4-68
GROUP	H. ...	4-3-68
DRAWN	C.GARCIA	4-1-68
CHECK	G. IRVIN	4-2-68
STRESS	DK McCool	4-2-68
PROJECT	[illegible]	4-5-61
APPD	SWANEY	4-2-68

Cessna AIRCRAFT CO.
COMMERCIAL AIRCRAFT DIV.
5800 E. PAWNEE
WICHITA, KANSAS

TITLE
WIRING DIAGRAM — INSTRUMENT & SWITCH PANEL POST LIGHTING (OPTIONAL)

SIZE	CODE IDENT NO.	DWG NO.
C	71379	1570000

SCALE: NONE 337 PAGE: 11.12.0

ED&RR 01367 (... 337-0977 & ON)

FORM NO 80-213A

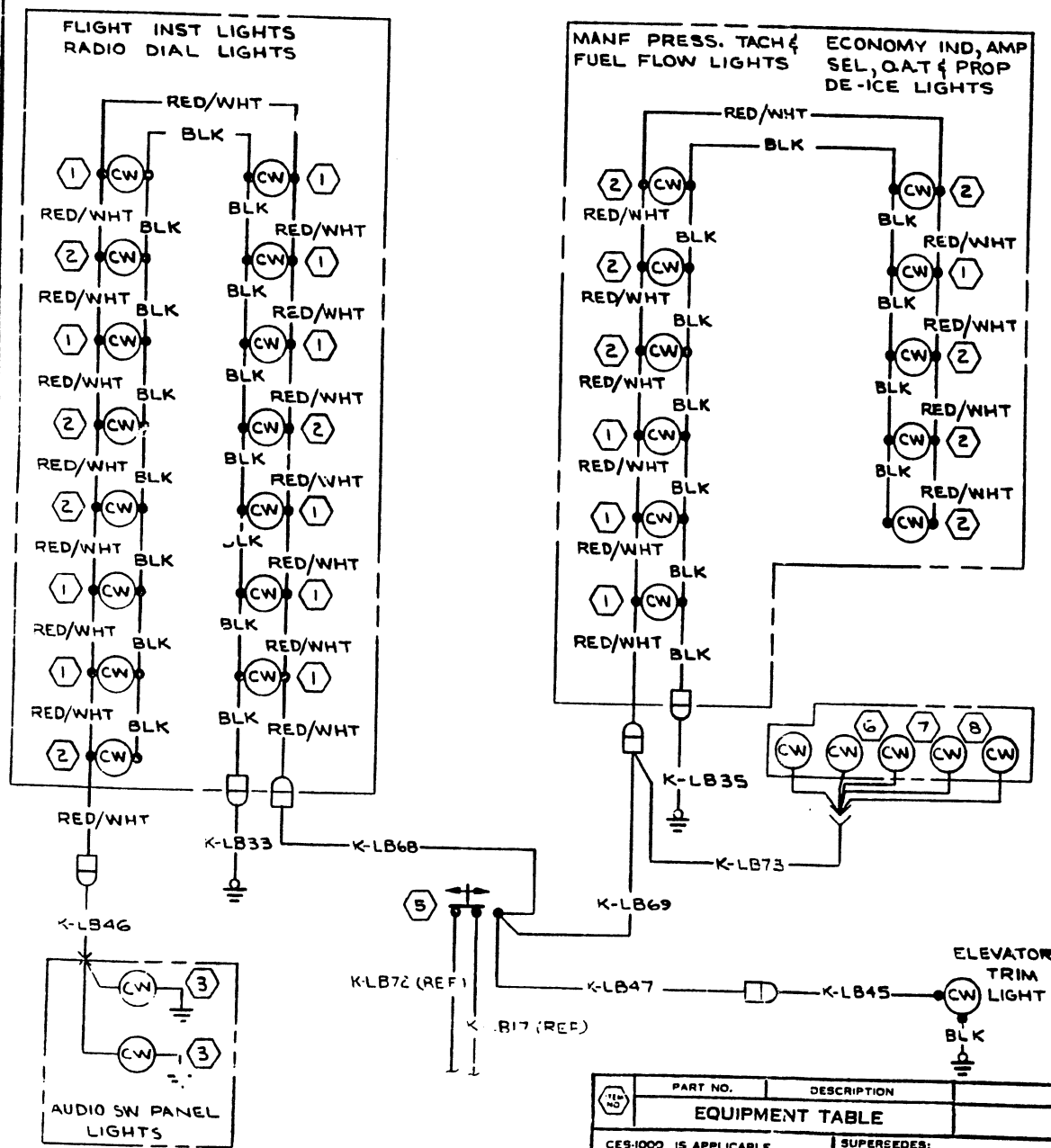

REVISION			
LET	DESCRIPTION	DATE	APPD

INACTIVE WHH 1-15-71
EFF THRU SER (SR6748) HKW
337-0979 THRU 33701379 AND
F33700001 THRU F33700040

WIRE CODE NO.	GA	MATERIAL	LG	TERMINALS		SERIALS

WIRE TABLE

ITEM NO	PART NO.	DESCRIPTION

EQUIPMENT TABLE

CES-1000 IS APPLICABLE
VENDOR CODES PER S-1400
CES-XXXX=CESSNA SPEC. NO.
S-XXX OR CMXXXX=CESSNA STD. NO.

SUPERSEDES: 1570000 P 11.1.1
SUPERSEDED BY: 1570000 PG 11.12.3

CONTRACT NO:

	NAME	DATE
DESIGN	HARDEN	4-26-68
GROUP	H Wise	4-3-68
DRAWN	C. GARCIA	4-1-68
CHECK	G. IRVIN	4-2-68
STRESS	[illegible]	4-2-68
PROJECT	[illegible]	4-30-68
APPD	SWANEY	4-2-68

Cessna AIRCRAFT CO.
COMMERCIAL AIRCRAFT DIV.
5800 E. PAWNEE
WICHITA, KANSAS

TITLE
WIRING DIAGRAM — INSTRUMENT & SWITCH PANEL POST LIGHTING (OPTIONAL)

SIZE	CODE IDENT. NO.	DWG NO.
C	71379	1570000

SCALE: NONE 337 PAGE: 11.12.1

ED&RR 01367 (W K 337-0979 & ON)

FORM NO 80-215A