CHAPTER 4

CONTENTS — GENERAL MAINTENANCE PROCEDURES

FIGURES

TABLES

GENERAL MAINTENANCE PROCEDURES

4-1. GENERAL.

This chapter details general maintenance techniques for cutting, crimping, and soldering electrical wiring and RF cables. These techniques provide general maintenance procedures for Chapters 5, 6, and 7 for repairing wiring harnesses, cable assemblies, shielded wire, and cables. In addition, general maintenance procedures for maintaining semiconductors in electronic equipment is included.

NOTE

Always refer to the applicable maintenance manual wiring schematics for termination requirements.

4-2. WIRE/CABLE CUTTING.

1. The manner in which wire or cable is cut can have an effect on subsequent stripping and termination preparations. Diagonal cutters (where the blades contact each other) are commonly used for wire cutting, but tend to bite the wire in half. This action distorts the conductor and flattens the ends of the strands. The result is increased strip force and an increased tendency for the strands to splay during stripping. This does not produce a precision cut.

2. The preferred type cutter is a shear-type where the blades pass by each other. This action causes very little distortion of the conductor. The recommended cutter is Ideal 45-123 or equivalent. This cutter handles a wide range of wire gage sizes and cannot be used for stripping.

4-3. WIRE/CABLE STRIPPING.

CAUTION

EXTREME CARE SHOULD BE EXERCISED SO AS NOT TO DAMAGE WIRE INSULATION AND CONDUCTORS DURING STRIPPING.

1. Before wire can be assembled to connectors, terminals splices, etc., the insulation must be stripped from connecting ends to expose the bare conductor. The proper strip length is determined by the depth of the hole in the wire contact, terminal, etc. The following outlines the proper tools and procedures to perform this function.

2. Strippers with mechanical die-type blades provide precision hand stripping. Blades of these strippers rely on a wedge-shaped cutter blade (dimensioned to the conductor) in combination with a centerbore (dimensioned to the insulation) to precisely center the wire for clean, nick free strips. The Ideal Stripmaster stripper or equivalent shall be used for wire insulation. Figure 4-1 lists the stripper part number and blade part number for stripping various wire specifications.

3. Stripper blades may be replaced, however, the blades (top and bottom) are a matched set and must not be interchanged with other blade halves. The back side of each blade half is imprinted with a serial number which must match the number on the other blade half. When changing blade sets, attention should be directed to the correct blade set part number and gripper part number for the range of wire size to be stripped.

4. WIRE STRENGTH. Refer to table 4-1 for allowable scratched, nicked or broken strands.

Table 4-1. Allowable scratched, nicked or broken strands in copper wire

WIRE SIZE	SCRATCHED NICKED OR BROKEN
24 - 12	None
10	2
8 - 4	3
2 - 0	12

CAUTION

A KNIFE SHALL NOT BE USED FOR STRIPPING. A KNIFE BLADE CAN DRASTICALLY NICK WIRE OR CUT STRANDS.

5. Use of Hand Wire Strippers.

a. Figure 4-1 illustrates the proper use of hand strippers, blades, and grippers for various wire types.

b. The stripper handle and gripping jaws must be fully open prior to stripping.

c. After wire size has been determined, place it in exact center of corresponding size slot in stripper.

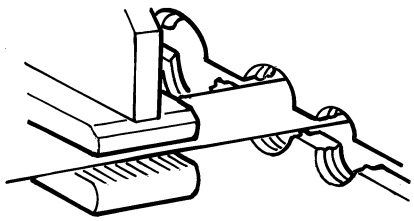

SELECT CORRECT HOLE
TO MATCH WIRE GAGE

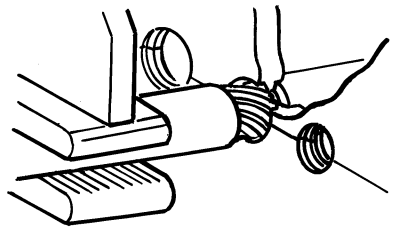

BE CAREFUL NOT TO
NICK OR CUT STRANDS

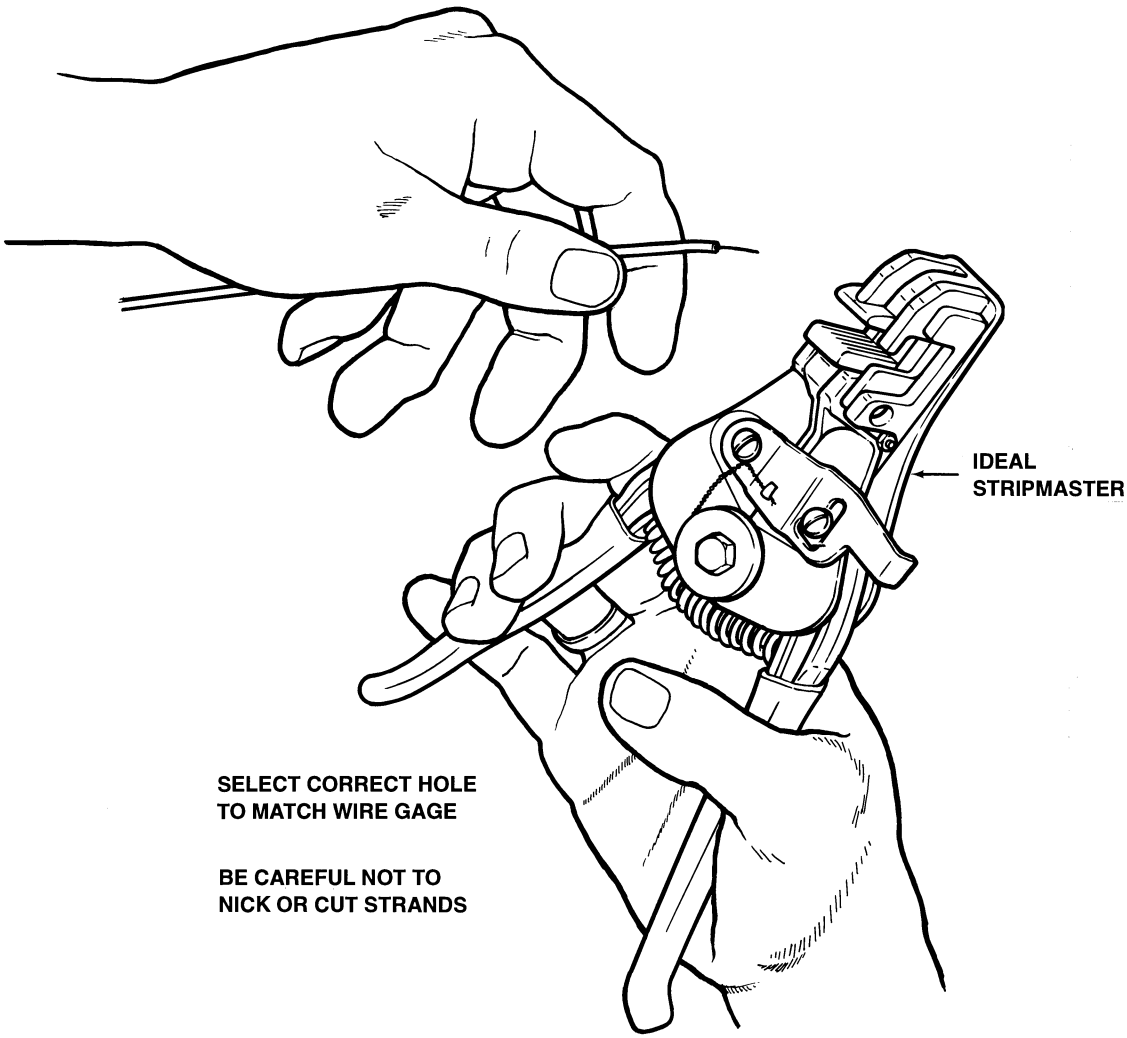

E/SPM-4-1-1

Figure 4-1. Stripping wire with hand stripper (Sheet 1 of 2)

WIRE TYPE	GAGE	STRIPPER PART NO.	BLADE SET PART NO.	GRIPPER PART NO.
MIL-W-22759	26 - 30	45 - 178	L -5561	L - 5217
/32 and /33	16 - 26	45 - 1987	45 - 1987 -1	
	10 - 14	45 - 1611	45 - 1611 - 1	L - 5215
MIL-W-22759/34,	16 - 26	45 - 1987	45 - 1987 - 1	L -5217
/35, /41, /42, /43	10 - 14	45 - 1611	45 - 1611 -1	L - 5215
MIL-W-81044	16 - 26	45 - 171	L - 5211	L–5217
/6 and /7	10 - 14	45 - 170	L - 5210	L - 5215
MIL-W-81044	16 - 26	45 - 174	L - 5563	L - 5217
/9 and /10	10 - 14	45 - 173	L - 5562	L - 5215
MIL-W-81044	26 - 30	45 - 178	L - 5561	L - 5217
/12 and /13	16 - 26	45 - 1987	45 - 1987 - 1	
	10 -14	45 - 1611	45 - 1611 -1	L - 5215
MIL-W-81381A	16 - 26	45 - 1654	45 - 1654 - 1	
/11, /12, /13, /14, /22 8.4 Mil Wall (KAPTON)	10 - 14	45 - 1608	45 - 1608 - 1	
MIL-W-81381A	16 - 26	45 - 1551	45 - 1551 - 1	
/7, /8, /9, /10, /21 5.8 Mil Wall (KAPTON)	10 - 14	45 - 1609	45 - 1609 - 1	
MIL-W-81381A /17, /18, /19, /20 4.6 Mil Wall (KAPTON)	16 - 26	45 - 1672	45 - 1672 - 1	
Wire wrapping	24 - 30	45 - 169	L - 9300	
(thin insulation) solid wire	30	45 - 179	L - 7625	
General purpose	26 - 30	45 - 172	L - 5436	
stripping of plastic,	16 - 26	45 - 171	L -5211	
fiberglass, and other hard to strip insulation	10 - 14	45 - 170	L - 5210	

Wire Stripper Tool Chart (Ideal Stripmaster)

E/SPM-4-1-2

Figure 4-1. Stripping wire with hand stripper (Sheet 2)

d. Partially close the handles, allowing wire to center in slot as wire gripping feature on stripper applies pressure.

e. Close handle completely to strip the insulation.

f. After insulation has been stripped, partially release pressure on handles. The jaws will separate. This feature prevents jaws from closing and damaging bare conductor.

g. Remove stripped wire.

h. Release handles allowing stripper to return to original position.

i. Inspect wire for the following:

(1) Nicked, scratched, or cut wire strands. Refer to table 4-1.

(2) Frayed insulation.

(3) Frayed wire strands.

NOTE

Ensure hands are clean before touching conductor. Grease and dirt will affect electrical conductivity and tensile strength of crimp joint.

j. Repeat above procedures if above conditions warrant. Correct frayed strands by firmly twisting conductor in same direction as normal lay of the wire.

6. Inspect wire terminations during rework to ensure the wires are correctly stripped. The two most common defects in stripping are incorrect strip length and nicked or broken wire strands. Bare copper strands must never be observed. Correct strip lengths are referenced in table 4-2.

Table 4-2. Ring lug and wire splice strip length

WIRE GAGE	STRIP LENGTH
26 - 24	0.16 in (3.96 mm)
10 - 20	0.19 in (4.76 mm)
18 - 14	0.25 in (6.35 mm)
12 -10	0.28 in (7.14 mm)

7. STRIP LENGTH. Most termination components (connector contacts, terminal module blocks, ring lugs, and wire splices) provide a viewing window for inspecting the wire after the termination component is installed. Wire stripped too short will not make good contact with the termination device. Wire stripped too long provides excessive bare conductor and has poor mechanical strength and possibly could short circuit to other conductors. Use the following guides when inspecting strip length:

a. Connector Contacts and Terminal Module Blocks. When stripped portion of wire is fully inserted (bottomed out) in contact crimp barrel, wire can be viewed at inspection hole and a maximum of 0.031 inch (0.79 mm) of wire is viewed between crimp barrel and wire insulation.

b. Ring Lugs and Wire Splice. Strip length for small gage terminated in ring lug and wire splice is as shown in table 4-2.

c. The Daniels 737 and CMS 20 electrical tool kits provide exact stripped length dimensions for most connectors used in Bell helicopters.

NOTE

Nicked or broken wire strands reduce electrical current capacity and mechanical strength of terminated wire.

4-4. SOLDERING.

1. GENERAL. Soldered connections are used in helicopter electrical wiring to form a continuous and permanent metallic connection having a constant electrical value. This paragraph describes the materials and equipment used in soldering helicopter interconnecting wiring. It also describes and illustrates the preparation and care of equipment, procedures to be followed, and the soldering techniques necessary to create a properly soldered joint.

2. DEFINITIONS AND DESCRIPTIONS.

a. Soldering. Soldering is the process of joining two or more metals together at a temperature lower than the melting points of the metals. In its molten state, solder chemically dissolves part of the metal surfaces to be joined. Most metals exposed to atmosphere acquire a thin film of tarnish or oxide; the longer the exposure the thicker the film becomes. This film is present even though it is not visible and solder alone cannot dissolve it. A soldering flux with a melting point lower than the solder must be used to wet the metal and allow the solder to penetrate and remove the film. The flux melts first, removing tarnish or metallic oxide and also preventing further oxide from forming while the metal is being heated to solder temperature. The solder then melts floating lighter flux and impurities suspended in it to the outer surface and edges of the molten fillet. The solder cools and forms an alloy with the metal. Most of the flux is burned away during the soldering process and any residue is removed by appropriate cleaning methods.

b. Soft Solder. Soft solder is an alloy consisting of various combinations of tin and lead, with silver and other additives, which melts at temperatures below 699°F (371°C). It may be in bar form to be melted for tinning, or in the form of rosin-cored solder for use with a soldering iron or other heating methods. Soft solder used in helicopter electrical wiring must conform to the requirements of Federal Specification QQ-S-571. Acid or inorganic chloride flux cores solder should not be used under any circumstances in a Bell helicopter.

(1) Core Wire Solders. Rosin cored: Nonactivated or mildly activated plastic conditioned.

(a) For general applications at low temperatures up to 248°F (120°C), use type SN60WRAMAP (EC-039) (59.5 to 61.5 percent tin, remainder lead) to solder tin-coated copper wire and coaxial cable.

(b) For application with silver-coated copper wire and silver-plated connections, use type SN62WRAMAP (EC-040) (61.5 to 62.5 percent tin, 1.75 to 2.25 percent silver, remainder lead). For high temperature up to 376°F (191°C) maximum, use Ag2.5 or Ag5.5. Do not confuse high temperature soft solder with the hard solder described in paragraph 4-4, step 2, substep (c).

(c) For applications on printed circuit boards and semiconductor devices where temperature limitations are critical and for other applications where an extremely short melting range is required, use type SN63WRAMAP (EC-041) (62.5 to 63.5 percent tin, remainder lead).

(2) Solid Wire Solder. Rosin-base flux is normally used with solid solder. Use of type W flux will ensure the product is non-activated. Following is a list of solid wire solders (with application), if preferred over rosin-cored solders:

(a) SN60WS for general electrical and electronics applications.

(b) SN62WS for silver-plated applications.

(c) SN63WS for applications on printed circuit boards and semiconductor devices.

c. Hard Solder. Hard solder (EC-045), often called brazing alloy, is a silver alloy which melts at temperatures ranging from 68 to 1600°F (360 to 871°C). Hard solder is used when greater mechanical strength or exposure to higher temperatures is required. Hard solder is commonly used in helicopter electrical systems for soldering thermocouple connections.

d. Flux. Flux is a chemical reducer used for surface conditioning before and during the soldering process. With soft solder, use Rosin fluxes conforming to MIL-F-14256 type RMA (mildly activated), such as solder flux (EC-023). Use RMA flux with SN63WS solder when soldering MIL-W-81381 wire. MIL-W-81381 (KAPTON) is a copper-stranded wire with nickel coating.

3. SOLDERING IRON PREPARATION AND MAINTENANCE. For successful, effective soldering, soldering iron tip must be tinned to provide a completely metallic surface through which heat may flow readily from the iron to the metal being soldered. If no tinning is present, iron will oxidize and heat cannot flow through. Copper has a very high rate of heat conductivity, but copper tips oxidize quickly and must be frequently cleaned and tinned. If a tip has become badly burned and pitted, as a result of overheating, replace it.

Some copper soldering iron tips used in production soldering are coated with pure iron to help prevent oxidation. A clean damp cloth may be used to wipe the iron tip.

CAUTION

DO NOT FILE SOLDERING IRON TIPS COATED WITH PURE IRON. FILING WILL RUIN THE PROTECTIVE COATING. IF THE TIP IS PITTED, REPLACE IT.

a. With the iron unplugged, file each working surface of the tip with a double-cut mill file until it is smooth and a bright copper color. Refer to figure 4-2.

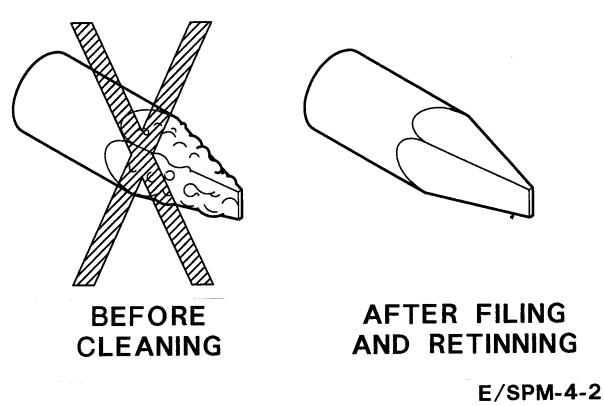

Figure 4-2. Soldering iron tip before and after cleaning

b. Remove copper filings from dressed edges with a file card.

c. Plug in the iron.

WARNING

AVOID ORAL CONTACT WITH HANDS DURING SOLDERING OPERATIONS AND WASH HANDS IMMEDIATELY AFTER SOLDERING OPERATION. THE LEAD CONTAINED IN SOLDER CAN BE A SOURCE OF OXIDE. LEAD OXIDE IS A POISON WHICH CAN ACCUMULATE IN THE BODY OVER THE YEARS RESULTING IN A SERIOUS HEALTH PROBLEM. TOUCHING SOLDER FOLLOWED BY SMOKING OR EATING IS A POTENTIAL MEANS OF INGESTING TRACE AMOUNTS OF LEAD OXIDE.

d. Apply cored solder just as dressed copper is turning to a pigeon-blue, bronze, oxide color. This will allow the flux to wet and clean tip before solder melts to form an even bright coating. Refer to figure 4-3.

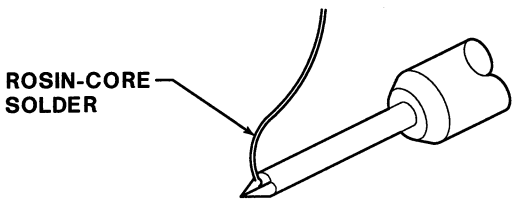

NOTE
TIN WHILE IRON IS HEATING

E/SPM-4-3

Figure 4-3. Tinning soldering iron tip

e. Wipe off excess solder with a damp sponge or cloth.

4. SOLDERING IRON MAINTENANCE.

CAUTION

NEVER SHAKE OR WHIP AN IRON TO GET RID OF DROSS OR EXCESSIVE SOLDER DROPLETS.

a. During use and just before each application, pass the soldering iron tip (with a rotary motion) through the folds of a damp cleaning sponge. This removes the surface dross and excess solder from the working surface.

b. Once a day, remove the tip and clean the black scale from the inside of iron and from the tip with fine steel wool. When iron tip is new, coat inside of shank with dry flake graphite or antiseize compound (EC-090) to prevent freezing, and ensure maximum heat transfer. When replacing tip, make sure it is inserted the full depth of casing and seated firmly against the heating element.

5. GENERAL SOLDERING PROCEDURES. Cleanliness is of the utmost importance in the soldering operation. If possible, soldering should be done in an area that is reasonably clean and free from excessive dust.

a. Parts contaminated with dirt, oil, grime, grease, etc., cannot be successfully soldered. Make sure all parts are mechanically bright-clean before soldering. Clean parts with a cloth or brush dipped in ethyl alcohol (EC-008), or other approved solvent. Badly corroded parts may be cleaned carefully by mechanical means, such as using fine abrasive paper or a wire brush.

b. Insulated conductors should be stripped a distance slightly longer than required for solder connection; excess conductor will be trimmed off prior to soldering. The outer circumference of the end of the insulation shall have a smooth edge. The inner circumference shall have no insulation protrusions around wires surface. Insulation shall not show evidence of nicks or cuts.

WARNING

AVOID ORAL CONTACT WITH HANDS DURING SOLDERING OPERATIONS AND WASH HANDS IMMEDIATELY AFTER SOLDERING OPERATION. THE LEAD CONTAINED IN SOLDER CAN BE A SOURCE OF LEAD OXIDE. LEAD OXIDE IS A POISON WHICH CAN ACCUMULATE IN THE BODY OVER THE YEARS RESULTING IN A SERIOUS HEALTH PROBLEM. TOUCHING SOLDER FOLLOWED BY SMOKING OR EATING IS A POTENTIAL MEANS OF INGESTING TRACE AMOUNTS OF LEAD OXIDE.

6. PRETINNING.

a. Before wires are soldered to connectors, the ends exposed by stripping are tinned to hold the strands solidly together. The tinning operation is considered satisfactory when the ends and sides of the wire strands

are fused together with a coat of solder. Do not tin wires which are to be attached to solderless terminals or splices, or wires which are to be crimped to removable crimp-style connector contacts.

b. Tinning with Soldering Iron. In the field, wires smaller than size No. 10 may be tinned with a soldering iron and rosin core solder as follows:

(1) Select a soldering iron having suitable heat capacity for wire size. Make sure that iron is clean and well tinned.

(2) Tin conductor for about half the exposed length, refer to figure 4-4. This is enough to take advantage of closed part of solder cup. Tinning or solder on wire above cup causes wire to be stiff at point where flexing takes place. This will result in wire breakage. Refer to figure 4-5 for properly stripped and tinned conductor.

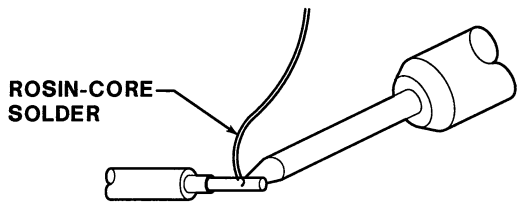

E/SPM-4-4

Figure 4-4. Tinning wire with a soldering iron

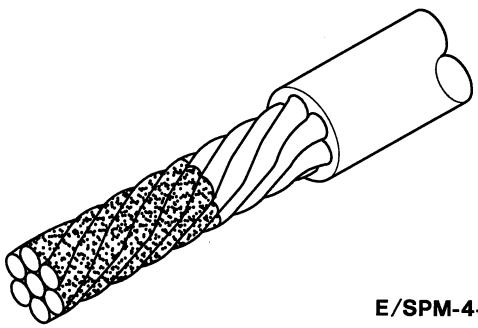

E/SPM-4-5

Figure 4-5. Properly stripped and tinned conductor

(3) Move soldering iron to opposite side of wire and tin half of the exposed length of conductor.

7. SOLDERING IRON SELECTION. Select a soldering iron with a thermal capacity high enough so that heat transfer is fast and effective. An iron with excessive heat capacity will burn or melt wire insulation, and iron with too little heat capacity will make a cold joint in which solder does not alloy with the work. Table 4-3 provides a list of soldering iron sizes for various size wire.

Table 4-3. Approximate soldering iron sizes for tinning

Wire size (AWG Gage)	Soldering Iron Size K (Heat Capacity)
20 - 16	65 Watts
14 and 12	100 Watts
10 and 8	200 Watts

a. Soldering irons are available in wattage ranges from 20 to 500 watts. Irons with wattage ratings of 60, 100, 200 watts are recommended for general use in helicopter electrical wiring. Pencil irons with a rating of 20 to 60 watts are recommended for soldering small parts. The soldering iron recommended for printed circuit soldering is a lightweight 55 watt iron with a 600°F (316°C) Curie point tip control. This iron has a three-wire cord to eliminate leakage currents which could damage printed circuits.

b. A soldering iron should also be suited to the task. Do not select a small pencil iron where a high steady heat flow is required.

8. SOLDERING TIP SELECTION. Select the tip best suited for size and shape of work to be soldered. Some common tip shapes are shown in figure 4-6. Soldering iron tips are available in sizes from 1/16 inch to 2 inches in diameter. For general use, a tip of 1/4 inch to 3/8 inch diameter is recommended. For printed circuit soldering, use a long shank tip of 1/16, 1/8, 3/32 or 3/16 inch diameter. Screwdriver, chisel, and pyramid shapes are recommended.

WARNING

AVOID ORAL CONTACT WITH HANDS DURING SOLDERING OPERATIONS AND WASH HANDS IMMEDIATELY AFTER SOLDERING OPERATION. THE LEAD CONTAINED IN SOLDER CAN BE A SOURCE OF LEAD OXIDE. LEAD OXIDE IS A POISON WHICH CAN ACCUMULATE IN THE BODY OVER THE YEARS RESULTING IN A SERIOUS HEALTH PROBLEM. TOUCHING SOLDER FOLLOWED BY SMOKING OR EATING IS A POTENTIAL MEANS OF INGESTING TRACE AMOUNTS OF LEAD OXIDE.

9. APPLICATION OF HEAT AND SOLDER.

a. Apply flux-core solder at the exact point between the metal and the soldering iron (figure 4-7) holding iron directly against the assembly. Melt solder on the joint, not on the iron. Place soldering iron firmly against junction. If heavy rocking pressure is necessary, either iron does not have sufficient heat capacity for the job, or it has not been properly prepared, or both.

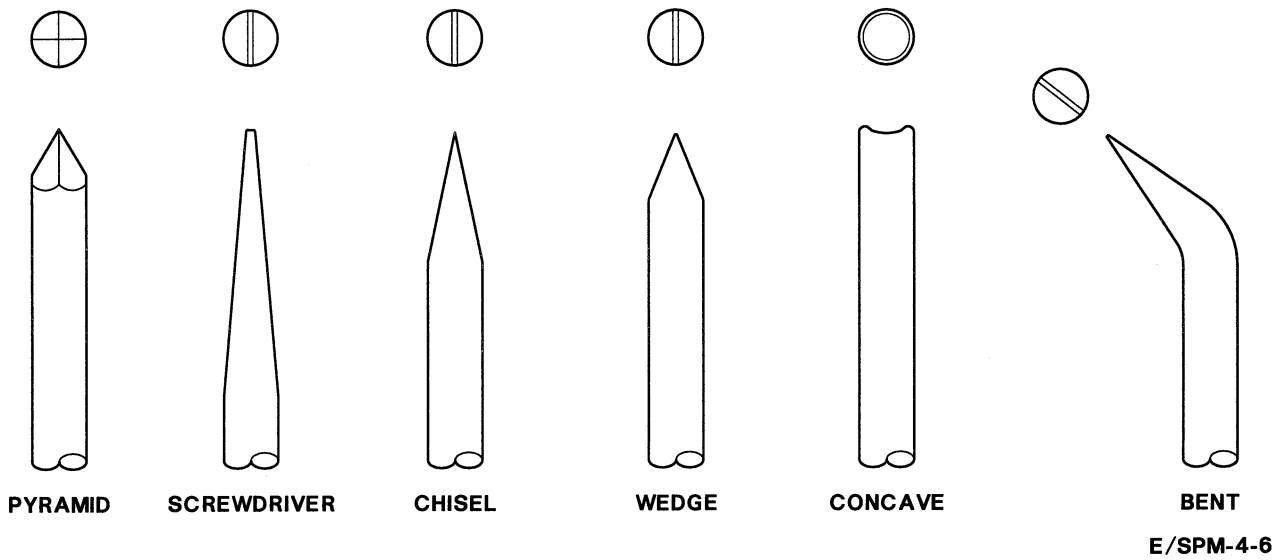

Figure 4-6. Soldering iron tip shapes

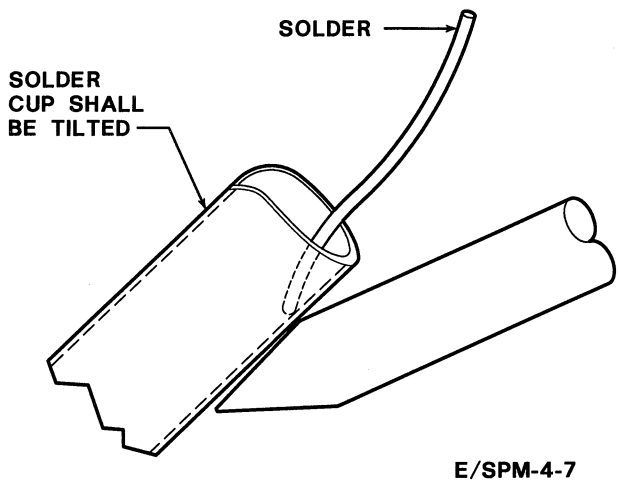

Figure 4-7. Correct solder application

b. Do not apply heat to the work any longer than necessary to melt solder on all parts of the joint. Do not use any more solder than necessary. Do not pile up solder around the joint; this is wasteful and results in joints difficult to inspect. Care should be exercised with silver-coated wire to prevent wicking during solder application.

10. SOLDERING IRON HOLDER. When the soldering iron is not in actual use during operations, keep it in a holder. Refer to figure 4-8. This will protect the operator against burns and the iron against damage.

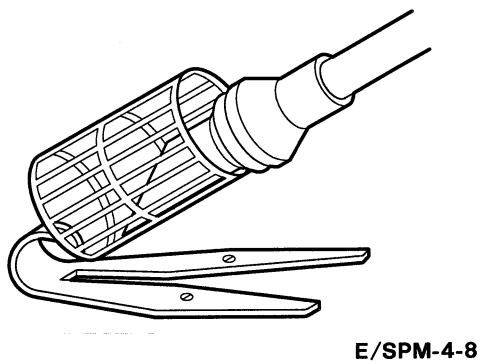

Figure 4-8. Soldering iron holder

11. OVERHEATING PROTECTION. Do not allow the iron to overheat. Disconnect the iron if it is not in use, between operations, or use a heat-dissipating stand which will keep the iron at a constant temperature.

12. COOLING. When the solder joint has been made, hold firmly in place until the joint has set. Disturbing finished work will result in a mechanically weak joint, with high electrical resistance. Allow solder joint to cool naturally. Do not use liquids or air blasts.

13. CLEANING. If the correct amount of solder is used and procedure instructions followed carefully, there should be little or no excess solder or flux remaining on the finished joint. Remove excess solder or flux using the following procedure:

a. Excess flux may be removed by brushing joint with a stiff brush dipped in isopropyl alcohol (EC-009) or

a similar approved solvent. Use alcohol sparingly and avoid contact between alcohol and insulation.

b. For cleaning printed circuit connections use a swab-stick dipped in isopropyl alcohol for small areas and a lint-free cloth for large areas.

c. Desoldering or removal of excess solder may be accomplished with solder wicks or suction-type desoldering tools. Solder wicks may be fashioned from scrap metal braid used on shielded cable or wire.

(1) Touch end of wick to soldered joint.

(2) Apply heat to the solder wick to draw off excess solder.

14. CONDUCTOR TERMINATION.

a. Spade Terminal.

(1) Strip wire insulation.

(2) Tin wire to be terminated.

(3) The conductor wrap on the spade termination shall be either 90 degrees or 180 degrees from point of entry onto the terminal and terminated flush with the top or face of the spade terminal. In cases where minimum bend radius of the connector wrap is less than the conductor diameter, the conductor wrap shall consist of a 90 degree bend. Refer to figure 4-9.

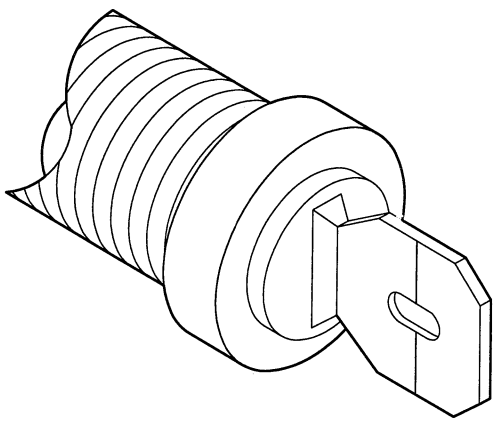

E/SPM-4-9

Figure 4-9. Spade termination

(4) The conductor will be centered on spade terminal.

b. Turret Terminal.

(1) Strip wire insulation.

(2) Tin wire to be terminated.

(3) The connector wrap shall be 180 degrees measured from point of contact with turret post and conductor termination. Refer to figure 4-10.

(4) The conductor shall be positioned in contact with turret post and base throughout conductor wrap. The conductor shall not overhang the base of the turret terminal. Refer to figure 4-11.

15. SOLDER CUP.

a. Conductor Removal From Solder Cup.

(1) Apply antiwicking tweezers to stranded wire conductors.

(2) Prior to removing solder from the solder cup, heat the solder cup to solder melting temperature and remove the conductor.

(3) Remove residual solder from the solder cup. The wicking method is most effective for removing the smaller amounts of residual solder at the bottom of the cup.

b. Solder Cup Preparation.

WARNING

ISOPROPYL ALCOHOL IS FLAMMABLE. DO NOT USE IN THE PRESENCE OF SPARKS, HEAT OR FLAME.

(1) Clean the solder cup prior to soldering. New solder cups can be cleaned with isopropyl alcohol, (EC-009) and an acid brush. Used solder cups that are to be reworked can be cleaned by tinning. Very dirty or oxidized solder cups may require abrasive methods to remove nonmetallic oxides.

NOTE

Connector type solder cups require tinning on the milled face and the corners of the solder cup.

(2) Prefill the solder cup with enough solder to fill cup without overflow when tinned conductor is inserted. The amount of prefilling needed will depend upon conductor size and/or number of of conductors being used. As a rule of thumb, fill the cup with solder up to the lower lip of the cutout section.

(3) All excess solder should be removed, leaving the terminal interior bright and shiny. Avoid spilling solder into areas not requiring solder. Clean the solder cup with isopropyl alcohol and an acid brush after the tinned solder cup has cooled.

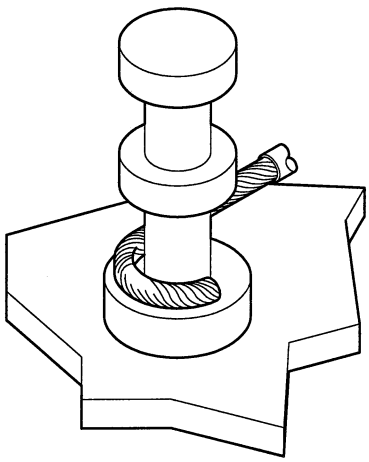

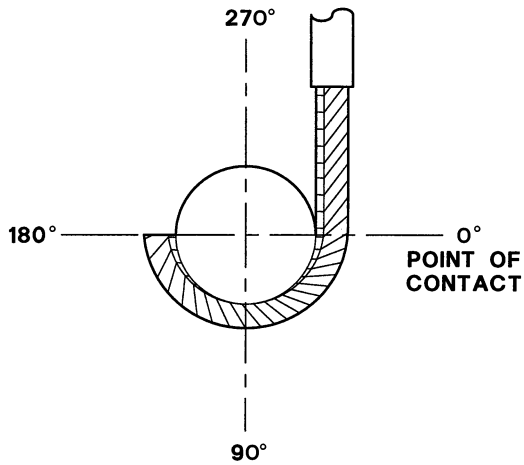

E/SPM-4-10

Figure 4-10. Turret terminal conductor wrap

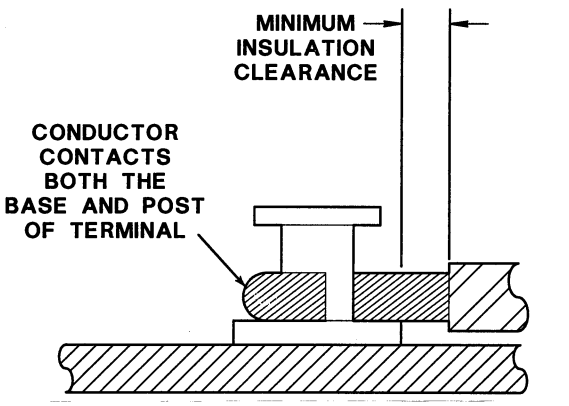

E/SPM-4-11

Figure 4-11. Turret terminal conductor position

c. Terminating the Conductor in a Solder Cup.

(1) Strip wire insulation in accordance with earlier instructions.

(2) Tin wire to be terminated in accordance with step 6.

(3) Cut a sufficient length of insulation sleeving/tubing (EC-073) and slide onto wire.

(4) Heat the solder, and insert conductor when solder is molten (allow gases and fluxes to escape). Fully bottom the conductor. Refer to figure 4-12.

(5) The wire shall be centered in the cup and enter parallel to axis of solder cup. Refer to figure 4-13. The wire shall be bottomed and in contact with rear of the solder cup.

(6) Insulation clearance shall be a minimum of one wire diameter and no greater than two wire diameters (including insulation) from the top edge of solder cup.

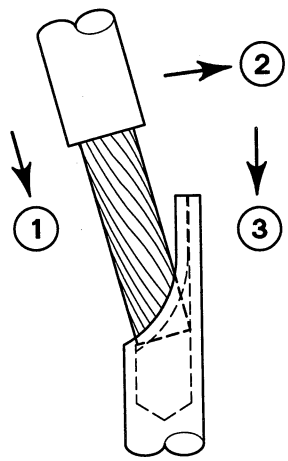

E/SPM-4-12

Figure 4-12. Inserting conductor

(7) The insulation sleeving/tubing shall extend beyond wire insulation a minimum of two wire insulation diameters. Refer to figure 4-14.

(8) The insulation sleeving/tubing shall fit snugly against the wire insulation.

16. INSPECTION. A good solder joint will have a bright silvery appearance, with smooth fillets and feathered, not sharp edges. The entire joint will be covered with a smooth even coat of solder and the contour of the joint will be visible. Refer to figure 4-15. Any of the following indicate a poor solder joint and are cause for rejection:

a. Dull gray, chalky, or granular appearance (evidence of a cold joint).

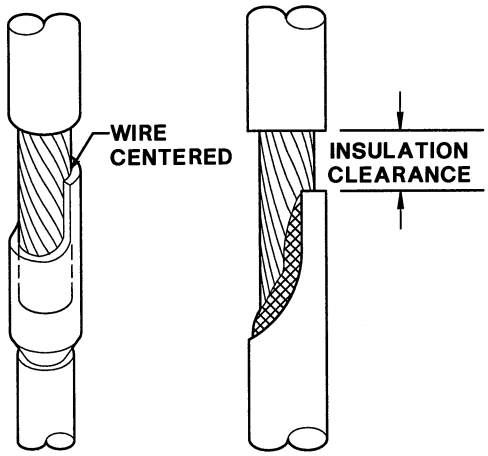

E/SPM-4-13

Figure 4-13. Positioning of conductors

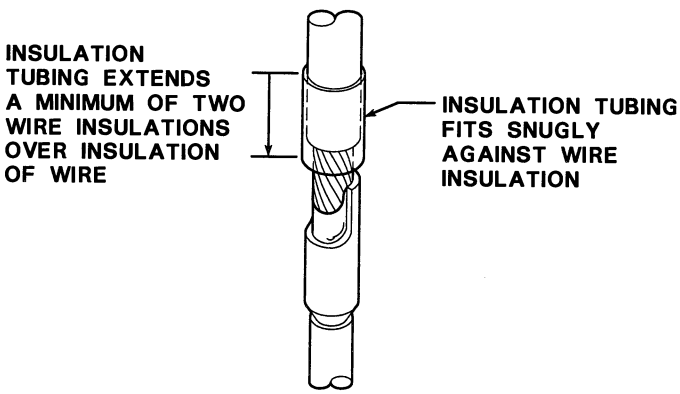

E/SPM-4-14

Figure 4-14. Insulation sleeving/tubing

b. Hair cracks or irregular surface (evidence of a disturbed joint).

c. Grayish, wrinkled appearance (evidence of excessive heat).

d. Partially exposed joint (evidence of insufficient solder).

e. Scorched wire insulation or burned connector inserts.

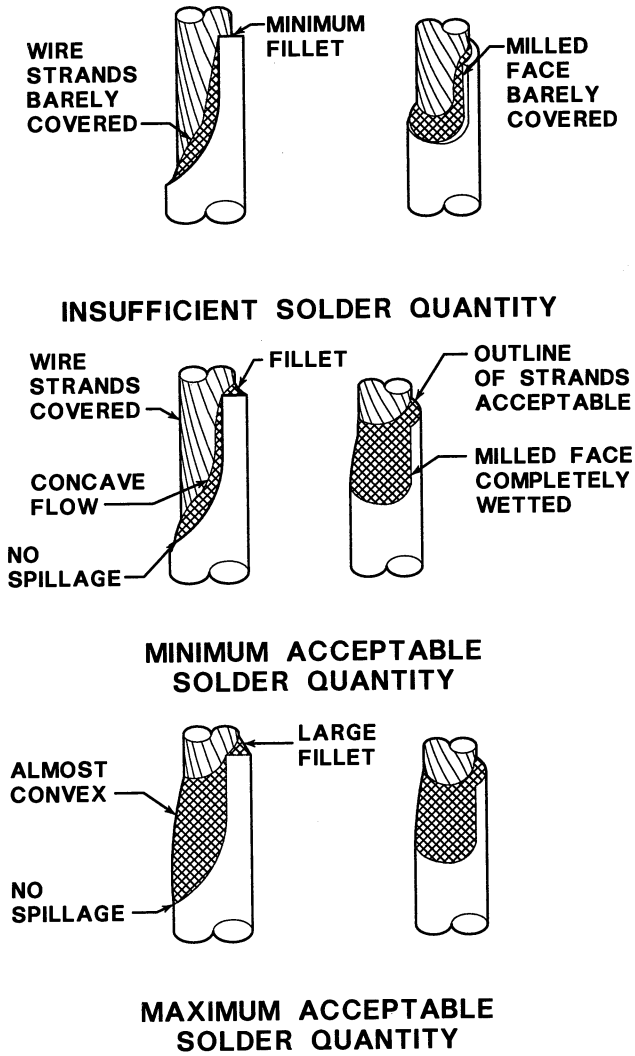

E/SPM-4-15

Figure 4-15. Solder quantity

f. Globules, drips, or tails of solder.

g. If any of the above are present, the joint must be taken apart, parts cleaned, and entire soldering operation repeated using fresh solder and flux.

4-5. SOLDER SHIELD TERMINATIONS.

This paragraph describes the authorized solder sleeves and installation procedures for terminating shielded cable on helicopters. Shielded termination using pigtails is also discussed.

1. SOLDER SLEEVES. Solder sleeves shall conform to MIL-S-83519. This specification covers environment

resistant, heat-shrinkable solder type shield terminations. They may be used on data-bus, RF and shielded cables in applications where operating temperature does not exceed 302°F (150°C). Each termination has a colored thermal indicator which is designed to disappear when surfaces have reached wetting temperature. Terminations are supplied premarked with a specific identification code. MIL-S-83519 shield terminations are available in two styles as follows:

a. M83519/1 series itemizations are used with MIL-C-27500 jacket types: 05, 08, 09, 10, 11, 12, 14, 15, 17, 18, 23 and their double jacket equivalents and all MIL-C-7078 cables. The ground lead must be fabricated from M22759/32 wire.

b. M83519/2 series terminations are used with the same cables as the M83519/1 series. These terminations have pre-installed M22759/32 ground leads.

2. SOLDER SLEEVE SHIELD TERMINATION FOR M83519/1 SERIES.

a. Prepare cable in accordance with applicable procedures in table 4-4, 4-5, or 4-6.

b. Prepare grounded lead by stripping one end of the applicable M22759/32-22-9 wire.

c. Using figure 4-16 as a guide, select the proper termination for the cable and ground lead being used.

d. Assemble the cable, ground lead, and terminations as shown in figure 4-17.

Table 4-4. Center strip preparation

Remove 1/4 to 5/16 inch (6.35 to 7.94 mm) of cable jacket at the desired termination point as follows:

a. Score the jacket around the cable in two places, 1/4 to 5/16 inch (6.35 to 7.94 mm) apart.

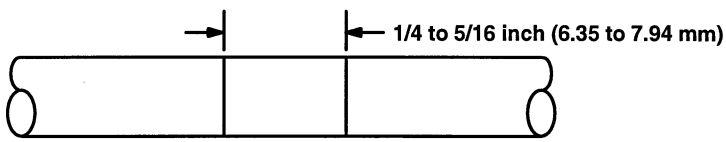

b. Score the jacket between the cuts.

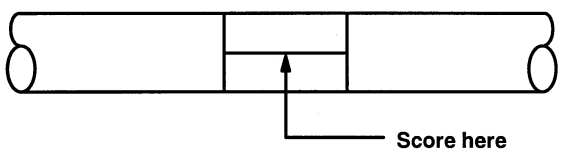

c. Remove the section of jacket.

Table 4-5. End strip preparation

This cable can be stripped according to the following procedures designed to leave the shield braid smooth and flat. The use of finger cots is recommended to prevent transfer of skin oil to the shield.

a. Score and remove the jacket.

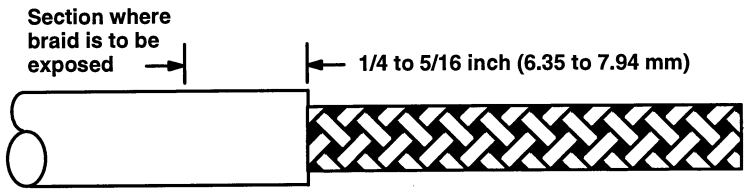

b. Bunch the braid.

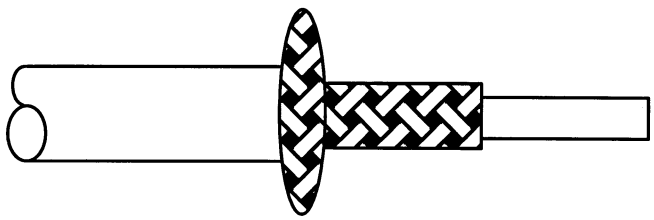

c. Trim the braid as close as possible to the jacket.

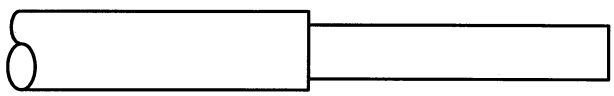

d. Score the jacket 1/4 to 5/16 inch (6.35 to 7.94 mm) from the end of the braid.

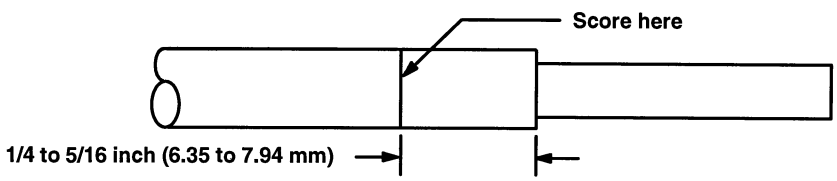

e. Remove section of jacket carefully by pulling straight. This will flatten the braid strand ends.

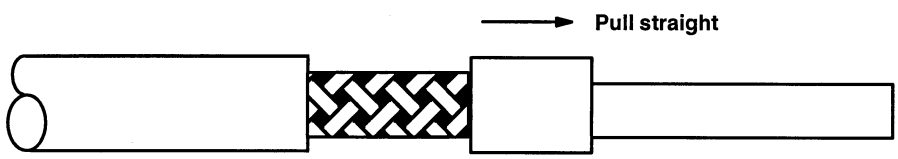

f. Inspect the cable to make sure that the braid strands are lying flat against the primary insulation.

Table 4-6. End strip with braid fold-back preparation

This cable can be stripped according to the following procedures designed to leave the shield braid smooth and flat. The use of finger cots is recommended to prevent transfer of skin oil to the shield.

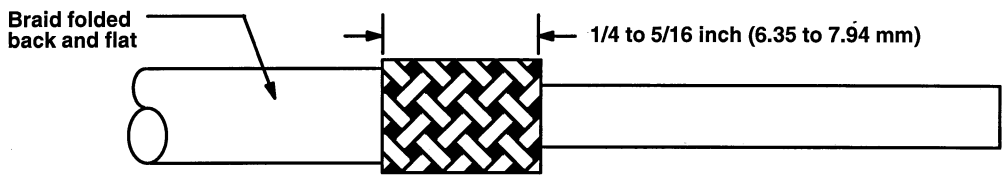

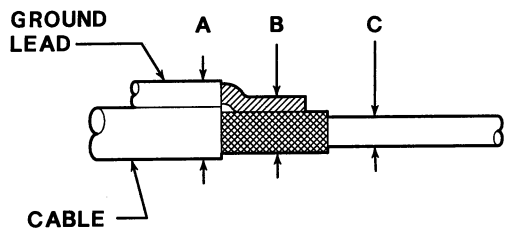

Part No.	MARKING CODE	A MAX	B MIN	C MIN
M83519/1-1	S101X	7/64 (2.78 mm)	3/64 (1.19 mm)	1/32 (0.79 mm)
M83519/1-2	S102X	9/64 (3.57 mm)	5/64 (1.98 mm)	1/32 (0.79 mm)
M83519/1-3	S103X	13/64 (5.16 mm)	3/32 (2.38 mm)	3/64 (1.19 mm)
M83519/1-4	S104X	1/4 (6.35 mm)	1/8 (3.18 mm)	5/64 (1.98 mm)
M83519/1-5	S105X	19/64 (7.54 mm)	5/32 (3.97 mm)	3/32 (2.38 mm)

Figure 4-16. M83519/1 termination selection

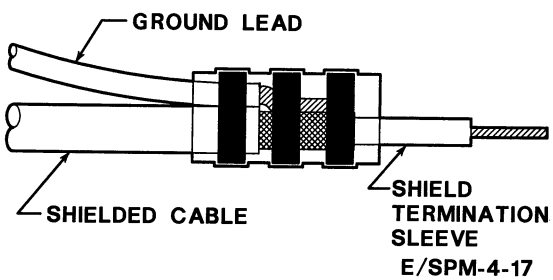

Figure 4-17. M83519/1 termination placement

NOTE

Allow termination to cool before moving.

e. Using heating tool HT-900 or equivalent and appropriate reflector, direct heat at the middle portion of the termination. Refer to figure 4-18. Heat until the following is observed:

(1) Sleeve shrinks.

WARNING

CONVENTIONAL HOT AIR GUNS MUST NOT BE USED ON FUELED HELICOPTERS BECAUSE OF EXPOSED HEATING ELEMENTS. USE A RAYCHEM HT-900, OR EQUIVALENT, COMPRESSED AIR/NITROGEN HEATING TOOL, QUALIFIED TO MIL-M-83521/5.

(2) Solder melts and flows into the wire and shield strands.

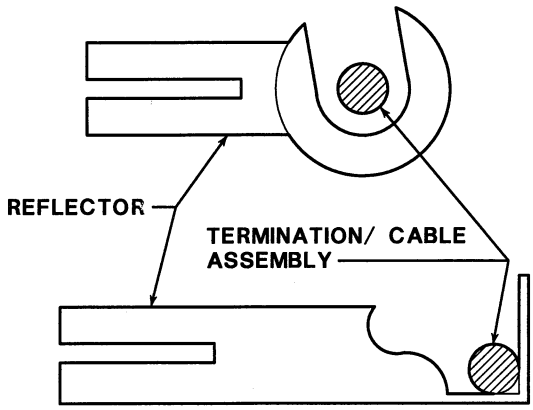

E/SPM-4-18

Figure 4-18. Position termination in reflector

(3) Sealing rings melt and begin to seep out the ends of the sleeve.

f. Inspect termination in accordance with paragraph 4-5, step 4.

3. SOLDER SLEEVE SHIELD TERMINATION FOR M83519/2 SERIES.

a. Prepare cable in accordance with applicable procedures in table 4-4, 4-5 or 4-6.

b. Using prepared cable, wire, and figure 4-19, select the proper termination for the cable being used.

c. Position applicable termination on cable. Refer to figure 4-20.

WARNING

CONVENTIONAL HOT AIR GUNS MUST NOT BE USED ON FUELED HELICOPTERS BECAUSE OF EXPOSED HEATING ELEMENTS. USE A RAYCHEM HT-900, OR EQUIVALENT, COMPRESSED AIR/NITROGEN HEATING TOOL, QUALIFIED TO MIL-M-83521/5.

d. Using heating tool HT-900 or equivalent, and appropriate reflector, direct heat at the middle portion of the termination. Refer to figure 4-18. Heat until the following is observed:

(1) Sleeve shrinks.

(2) Solder melts and flows into the wire and shield strands.

(3) Sealing rings melt and begin to seep out the ends of the sleeve.

e. Inspect termination in accordance with paragraph 4-5, step 4.

4. SOLDER SLEEVE TERMINATION INSPECTION.

NOTE

The thermal indicator is an installation aid and evidence of color change shall not be used as sole criterion for acceptance of terminated assemblies.

a. Underheated terminations shall show definite signs of presence of the thermal indicator. The soldered area shall show traces of the thermal indicator at the minimum acceptable level. Thermal indicator will not be visible in the soldered area at maximum solder flow level.

b. Visually examine sealing rings to ensure that they have recovered tightly around cable.

c. Minimum solder flow. Accept if all of the following conditions are present:

(1) Solder has lost all appearance of ring shape.

(2) Ground lead and shield contours are visible.

(3) There is a definite filet visible along ground lead and shield interface.

d. Maximum solder flow. Accept if all of the following conditions are present:

(1) Fillet is clearly visible between ground lead and shield.

(2) Joint area is visible despite browning of sleeve.

e. Insufficient heat. Reject if any of the following conditions are present:

(1) Contour of solder preform is visible.

(2) Contour of ground lead and/or shield is obscured by solder.

f. Overheated. Reject if any of the following conditions are present:

(1) Joint area is not visible because of severe darkening of outer sleeve.

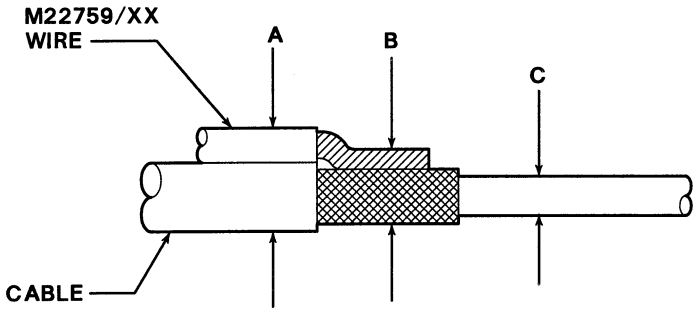

PART NO.	MARKING CODE	GROUND LEAD WIRE GAGE	A MAX	B MIN	C MIN
M83519/2-1	S0201X	20	7/64	1/32	1/64
M83519/2-2	S0202X	20	9/64	1/16	1/32
M83519/2-3	S0203X	20	13/64	5/64	3/64
M83519/2-4	S0204X	20	1/4	3/32	5/64
M83519/2-5	S0205X	20	19/64	9/64	3/32
M83519/2-6	S0206X	22	7/64	1/32	1/64
M83519/2-7	S0207X	22	9/64	1/16	1/32
M83519/2-8	S0208X	22	13/64	5/64	3/64
M83519/2-9	S0209X	22	1/4	3/32	5/64
M83519/2-10	S0210X	22	19/64	9/64	3/32
M83519/2-11	S0211X	24	7/64	1/32	1/64
M83519/2-12	S0212X	24	9/64	1/16	1/32
M83519/2-13	S0213X	24	13/64	5/64	3/64
M83519/2-14	S0214X	24	1/4	3/32	5/64
M83519/2-15	S0215X	24	19/64	9/64	3/32
M83519/2-16	S0216X	26	7/64	1/32	1/64
M83519/2-17	S0217X	26	9/64	1/16	1/32
M83519/2-18	S0218X	26	13/64	5/64	3/64
M83519/2-19	S0219X	26	1/4	3/32	5/64
M83519/2-20	S0220X	26	19/64	9/64	3/32

(DIMENSIONS ARE IN INCHES)

E/SPM-4-19

Figure 4-19. M83519/2 termination selection

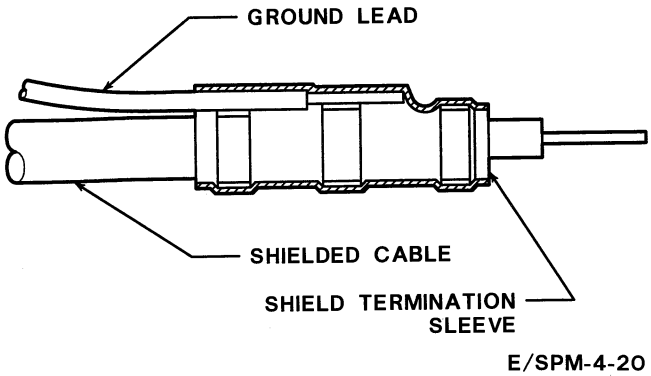

Figure 4-20. M83519/2 termination placement

(2) Solder fillet is not visible along ground lead and shield interface.

(3) Wire insulation damaged (slight browning okay) outside of sleeve.

5. REWORK OF SOLDER SLEEVES. The insulation sleeve must be replaced if it is misaligned, overheated or otherwise damaged.

a. Remove sleeve by performing the following:

(1) Score sleeve using a sharp blade. It is not necessary to cut through the sleeve. Use care not to cut cable jacket or ground lead insulation.

(2) Reheat sleeve until it softens and then grasp it with needle-nose pliers, on the side opposite of the scored line, and gently pull the sleeve off of the assembly.

b. If examination of the solder joint after sleeve removal show that the solder joint is acceptable, reinsulate the termination using the following procedures:

(1) Use a terminator of the correct size.

(2) Remove the solder preform by crushing the preform and allowing it to drop out of the sleeve.

(3) Center the sleeve over the solder joint and heat until it recovers onto the assembly.

6. SOLDER JOINT REPLACEMENT. The solder joint must be remade if it is misaligned or there is insufficient solder in the joint because of overheating.

a. Disassemble joint using the following procedures:

(1) Remove sleeve using the procedures in subparagraph 5, a.

(2) Heat solder joint until the solder melts and then carefully separate the components.

b. Reterminate the solder joint removing as much solder from the cable shield as possible and then installing a new terminator as described in paragraph 4-4.

7. INSPECTION OF REWORK. Inspect all reworked assemblies per paragraph 4-5, step 4.

8. TERMINATING MULTIPLE SHIELDED CABLES. When terminating multiple shielded cables using solder sleeves proceed as follows:

NOTE

If four or more shields are to be terminated at a given termination point, the shields should be arranged into groups. Each group will consist of a maximum of four shields linked from one shield to the other. The last termination of each group will then be terminated with a splice cap. Final termination of splice cap to ground, or a connector pin, requires a separate wire. All splice caps will have a maximum of four wires.

a. Install solder sleeves as outlined previously in paragraph 4-5.

b. Each cable in turn is attached to the adjacent cable and the final hookup wire is terminated with a contact and then inserted into the connector. Refer to figure 4-21.

9. SHIELD TERMINATION. When terminating a shielded cable assembly using a pigtail, refer to figure 4-22 and proceed as follows:

a. Determine and mark the point at which shielding is to terminate. This will depend on length of conductor necessary to make the connection, or in some cases on length of braid pigtail required to ground shielding.

b. Push back the shielding so as to form a bulge at this point, insert an awl, or other pointed tool, between the strands of shielding and work an open circular area into the shield. Maximum shield strand breakage shall not exceed 10 percent. If more than 10 percent are broken, use of an M83159/1 shield terminator is permissible.

c. Bend the cable, insert the tool between shielding and wire and pull conductor through.

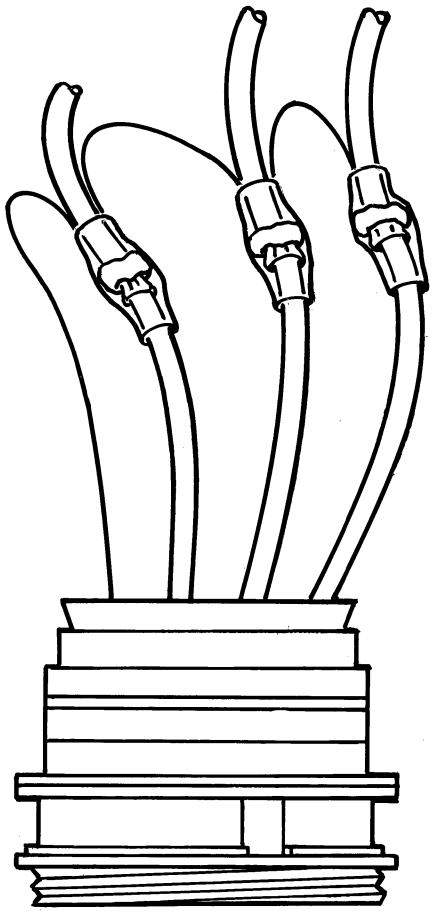

E/SPM-4-21

Figure 4-21. Terminating multiple shielded cables with solder sleeves

d. Pull the empty part of shield taut and tin the last 1/4 inch unless crimped-on type terminal is to be attached. Crimp termination is then accomplished as required.

10. MULTIPLE SHIELD TERMINATIONS. When terminating multiple shielded cables using pigtails proceed as follows:

a. Form a pigtail on each shielded cable. Refer to step 9.

b. Crimp a single wire into one end of a splice then insert and crimp pigtails in opposite end. Refer to figure 4-23.

c. Solder or crimp single wire in a selected contact.

11. ALTERNATE MULTIPLE SHIELD TERMINATIONS. An alternate method employing pigtails may be used if connector has a cable clamp. The procedure is as follows:

NOTE

In the following steps if all shields will not fit into one solderless terminal lug, use several terminal lugs and distribute them under both screws.

a. Form a pigtail on each shielded wire and crimp together in a solderless terminal lug.

b. Attach the terminal lug under the screw on the cable clamp. Refer to figure 4-24.

12. FLOATING SHIELD TERMINATIONS. Wiring installations that do not require the shield to be terminated to a contact or a ground are prepared as follows:

a. Strip the outer insulating jacket to expose a maximum five-inch length of shield.

b. Push back and trim shield leaving 1/4 to 5/16 inch of bare shield.

c. Fold the shield back over the outer jacket. Inspect wires to ensure that center conductor was not cut during stripping.

d. Slide a 3/4-inch length of heat shrinkable tubing (EC-069) over the folded back shield and apply heat. The heat shrinkable tubing shall be installed before conductors are terminated.

e. The exposed length of conductor should be the minimum length which is sufficient to accept insertion and removal of tools, if applicable, but not more than four inches.

4-6. SHIELDED CABLE SPLICES.

This section covers selection and installation procedures used for making environment resistant in-line splices in shielded cables.

1. TOOLS AND EQUIPMENT.

Tools Required
M22520/5-01 Crimp Tool with die sets -101 or -102 as required
RayChem model CV-5300 or HT-900 minigun heating tool (not to be used on fueled aircraft).
Ruler readable to 0.0625 inch.
Stripping tools for cable jacket and primary wires.
Small scissors or diagonal cutters for trimming cable braid.

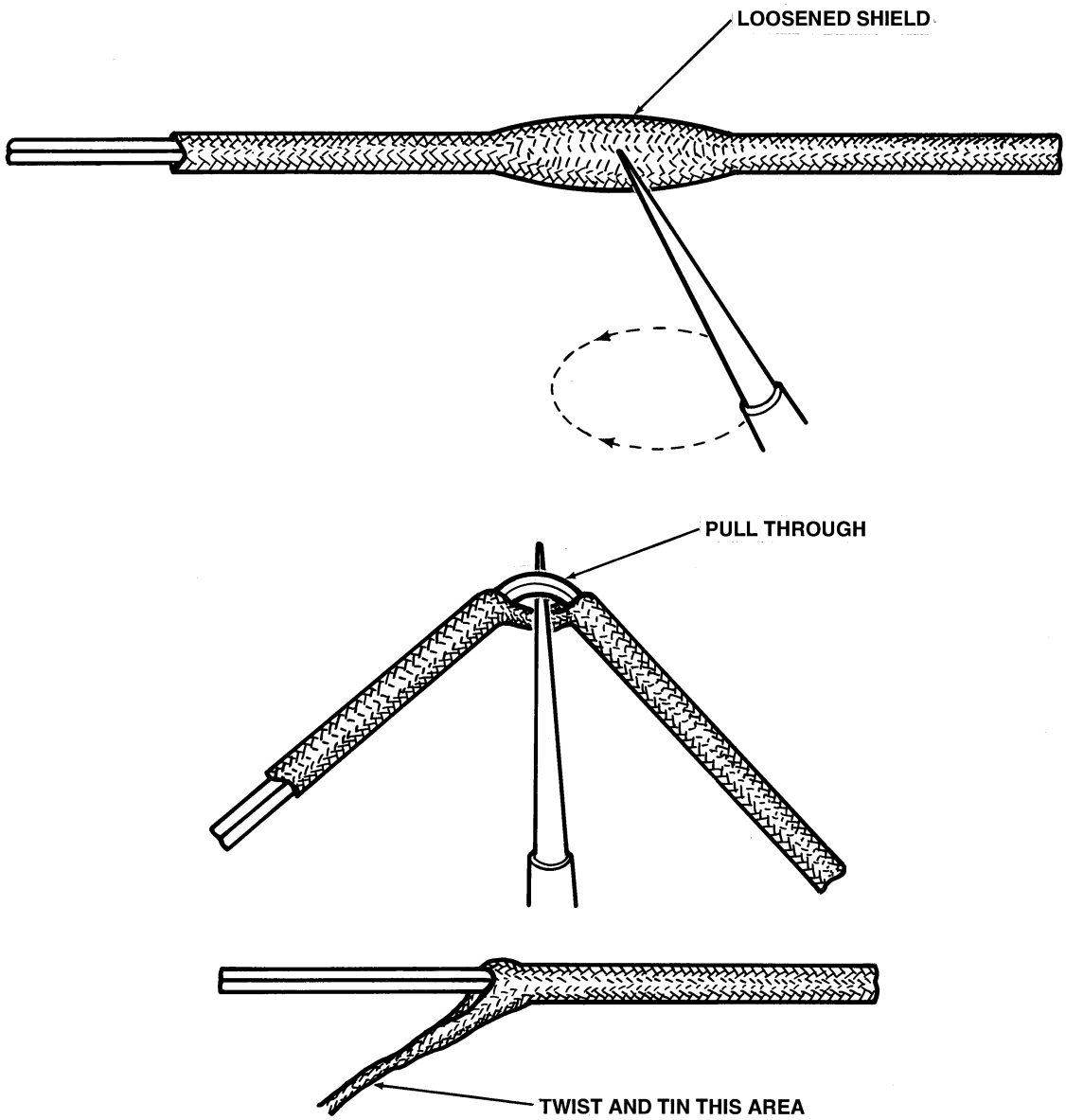

NOTE

Do not tin if crimp terminal is to be installed.

E/SPM-4-22

Figure 4-22. Shield termination

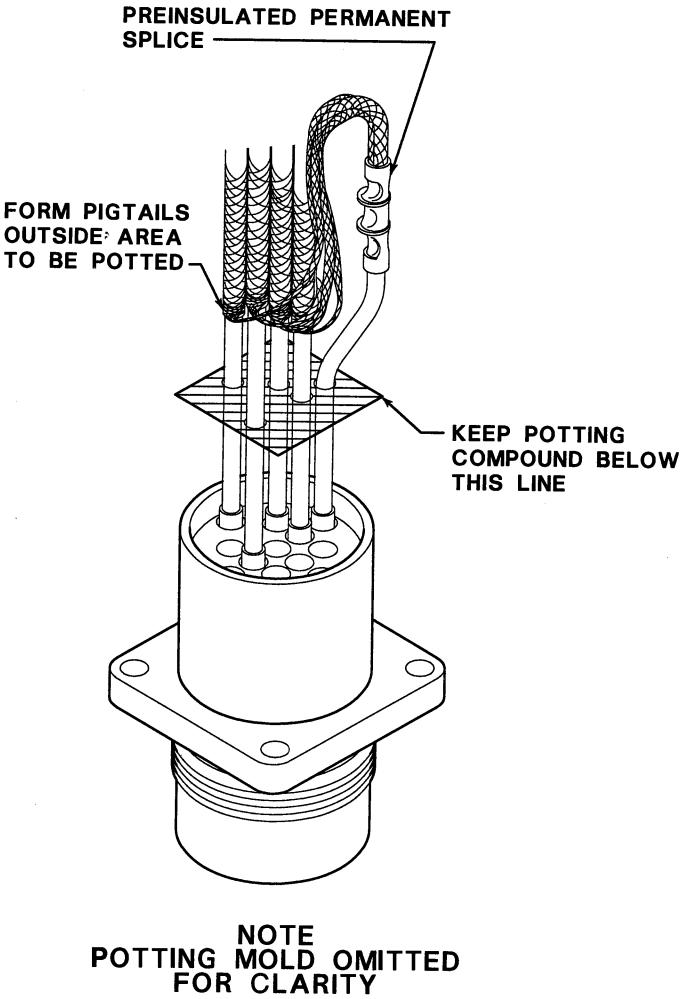

E/SPM-4-23

Figure 4-23. Terminating multiple shielded cables using pigtails

2. INSTALLATION PROCEDURES. Select proper splice kit from tables 4-8 and 4-9.

Example: A mixed gage cable having three 20 gage conductors connected to three 16 gage conductors would require D-150-0260 kit.

a. Refer to table 10 to determine material contained in each kit.

b. Refer to table 4-11 for dimensions material and a cross reference of material to kit.

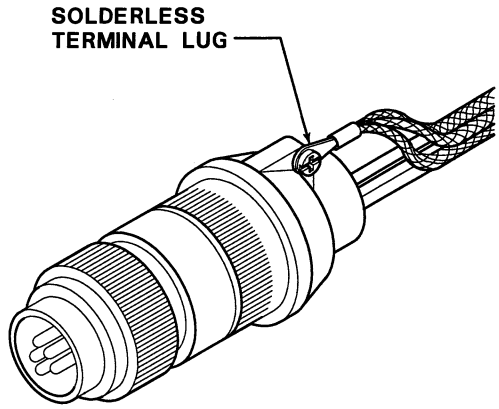

E/SPM-4-24

Figure 4-24. Terminating multiple shielded cables

3. CABLE PREPARATION. References to cables A and B are used to denote opposite sides of splice. All tolerances are plus or minus 0.0625 inch unless noted otherwise. Strip cables as follows:

a. Remove cable jacket as follows:

	Both Cables
Single Conductor Cables	2 in. (50.8 mm)
Two Conductor Cables	3 in. (76.2 mm)
Three Conductor Cables	4.25 in. (107.95 mm)
Four Conductor Cables	5.5 in. (139.7 mm)

b. Remove all but 0.5 in. (12.7 mm) of braid.

c. Stagger cut conductors. Cables A and B are mirror images e.g. longest primary conductor in cable A is shortest in cable B. Refer to figure 4-25.

4. MULTICONDUCTOR CABLES. Measure from cable jacket. Refer to table 4-7 and figure 4-25.

Table 4-7. Dimensions from cable jacket to end of conductor

First Conductor	1.25 in. (31.75 mm)
Second Conductor	2.5 in. (63.5 mm)
Third Conductor	3.75 in. (95.25 mm)
Fourth Conductor	5.0 in. (139.7 mm)

a. Strip all conductor 0.25 to 0.313 in. (6.35 to 7.938 mm).

b. Table 4-10 provides a material list for each kit. If the two cables to be spliced have different size conductors, place items as follows:

(1) Large cable. Place outer sleeve, larger terminator, and jumper braid.

(2) Small cable. Place smaller terminator.

5. SPLICE ASSEMBLY.

a. Primary Splice:

(1) Place one sealing sleeve onto longer lead of each matching set of conductors of cable A and B.

(2) Install a crimp splice on each conductor of cable A.

(3) Crimp matching conductors into open end of splice.

(4) Center sealing sleeves over completed splices and apply heat to center of sleeve to lock in position.

(5) Apply heat ends of sleeve until sealing rings melt and flow along wire insulation.

6. INSPECTION.

a. Wire colors in opposite sides of crimp are correct.

b. Crimp indentations are clearly visible.

c. Sealing sleeve is fully recovered and inserts have lost their shape and flowed along wire.

d. Sealing sleeve is not split

7. BRAID SPLICE.

a. Slide jumper braid forward so that trailing end is at end of cable jacket.

b. Trim braid and form both ends of braid around the cable shields making sure that end of jumper braid does not extend onto cable jacket.

c. Position terminators so that solder preform is located approximately 0.25 in. (6.35 mm) from cable jacket.

d. Heat terminators until solder melts and flows into braid.

e. Inspection. Ensure terminators have been heated enough and there is no unmelted solder.

Table 4-8. Kits (D-150-XXXX) for 1 to 1 splice

Primary Gage	Number of Primaries			
	One	Two	Three	Four
22	-0255	-0256	-0257	-0257
20	-0255	-0256	-0257	-0257
18	-0258	-0259	-0260	-0260
16	-0258	-0259	-0260	-0260
14	-0261	-0262	-0262	-0262
12	-0261	-0262	-0262	-0262

Table 4-9. Kits (D-150-XXXX) for mixed gage splices

SPLICE CONFIGURATION		KIT
SIDE A	SIDE B	
20AWG TWISTED PAIR	16AWG TWISTED PAIR	-0259
20AWG TRIO	16AWG TRIO	-0260
2X22AWG SINGLE	1X20AWG SINGLE	-0255
2X22AWG SINGLE	1X16AWG SINGLE	-0258

Table 4-10. Material list

ITEM	D-150-0255 PART NAME	QTY/ KIT
1	D-150-0255-01-01	1
2	D-150-0255-02-01	1
3	D-150-0255-03-01	2
4	D-150-0255-04-01	1
5	D-150-0255-05-01	1

ITEM	D-150-0256 PART NAME	QTY/ KIT
1	D-150-0255-01-02	1
2	D-150-0255-02-01	1
3	D-150-0255-03-02	2
4	D-150-0255-04-01	2
5	D-150-0255-05-01	2

ITEM	D-150-0257 PART NAME	QTY/ KIT
1	D-150-0255-01-02	1
2	D-150-0255-02-01	1
3	D-150-0255-03-03	2
4	D-150-0255-04-01	4
5	D-150-0255-05-01	4

ITEM	D-150-0258 PART NAME	QTY/ KIT
1	D-150-0255-01-01	1
2	D-150-0255-02-01	1
3	D-150-0255-03-01	2
4	D-150-0255-04-02	1
5	D-150-0255-05-02	1

ITEM	D-150-0259 PART NAME	QTY/ KIT
1	D-150-0255-01-02	1
2	D-150-0255-02-01	1
3	D-150-0255-03-03	2
4	D-150-0255-04-02	2
5	D-150-0255-05-02	2

ITEM	D-150-0260 PART NAME	QTY/ KIT
1	D-150-0255-01-02	1
2	D-150-0255-02-02	1
3	D-150-0255-03-03	2
4	D-150-0255-04-02	4
5	D-150-0255-05-02	4

ITEM	D-150-0261 PART NAME	QTY/ KIT
1	D-150-0255-01-02	1
2	D-150-0255-02-01	1
3	D-150-0255-03-02	2
4	D-150-0255-04-03	1
5	D-150-0255-05-03	1

ITEM	D-150-0262 PART NAME	QTY/ KIT
1	D-150-0255-01-02	1
2	D-150-0255-02-01	1
3	D-150-0255-03-04	2
4	D-150-0255-04-03	4
5	D-150-0255-05-03	4

Table 4-11. Dimensions of kit material and cross reference of material to kits

ITEM NO. 1 OUTER SLEEVE

PART NAME	LENGTH (NOM.)	I.D. BEFORE	I.D. AFTER	USED KITS D-150-			
D-150-0255-01-01	8.0	0.315	0.080	0255	0258		
D-150-0255-01-02	8.0	0.470	0.120	0256	0257	0259	0260
				0261	0262		

ITEM NO. 2 JUMPER BRAID

PART NAME	LENGTH (NOM.)*	I.D. MIN.*	USED IN KITS D-150-			
D-150-0255-02-01	3.5	0.230	0255	0256	0257	0258
			0259	0261		
D-150-0255-02-02	5.5	0.344	0260	0262		

*Measured on mandrel equal to I.D. min.

ITEM NO. 3 TERMINATOR

PART NAME	LENGTH (NOM.)	I.D. MIN.	USED IN KITS D-150-			
D-150-0255-03-01	0.625	0.180	0255	0258		
D-150-0255-03-02	0.750	0.235	0256	0261		
D-150-0255-03-03	0.750	0.280	0257	0259	0260	
D-150-0255-03-04	0.750	0.370	0262			

ITEM NO. 4 SEALING SLEEVE

PART NAME	LENGTH (NOM.)	COLOR	USED IN KITS D-150-			
D-150-0255-04-01	0.085	RED	0255	0256	0257	
D-150-0255-04-02	0.110	BLUE	0258	0259	0260	
D-150-0255-04-03	0.170	YELLOW	0261	0262		

ITEM NO. 5 CRIMP SPLICE

PART NAME	LENGTH (NOM.)	COLOR	USED IN KITS D-150-			
D-150-0255-05-01	0.045	RED	0255	0256	0257	
D-150-0255-05-02	0.064	BLUE	0258	0259	0260	
D-150-0255-05-03	0.097	YELLOW	0261	0262		

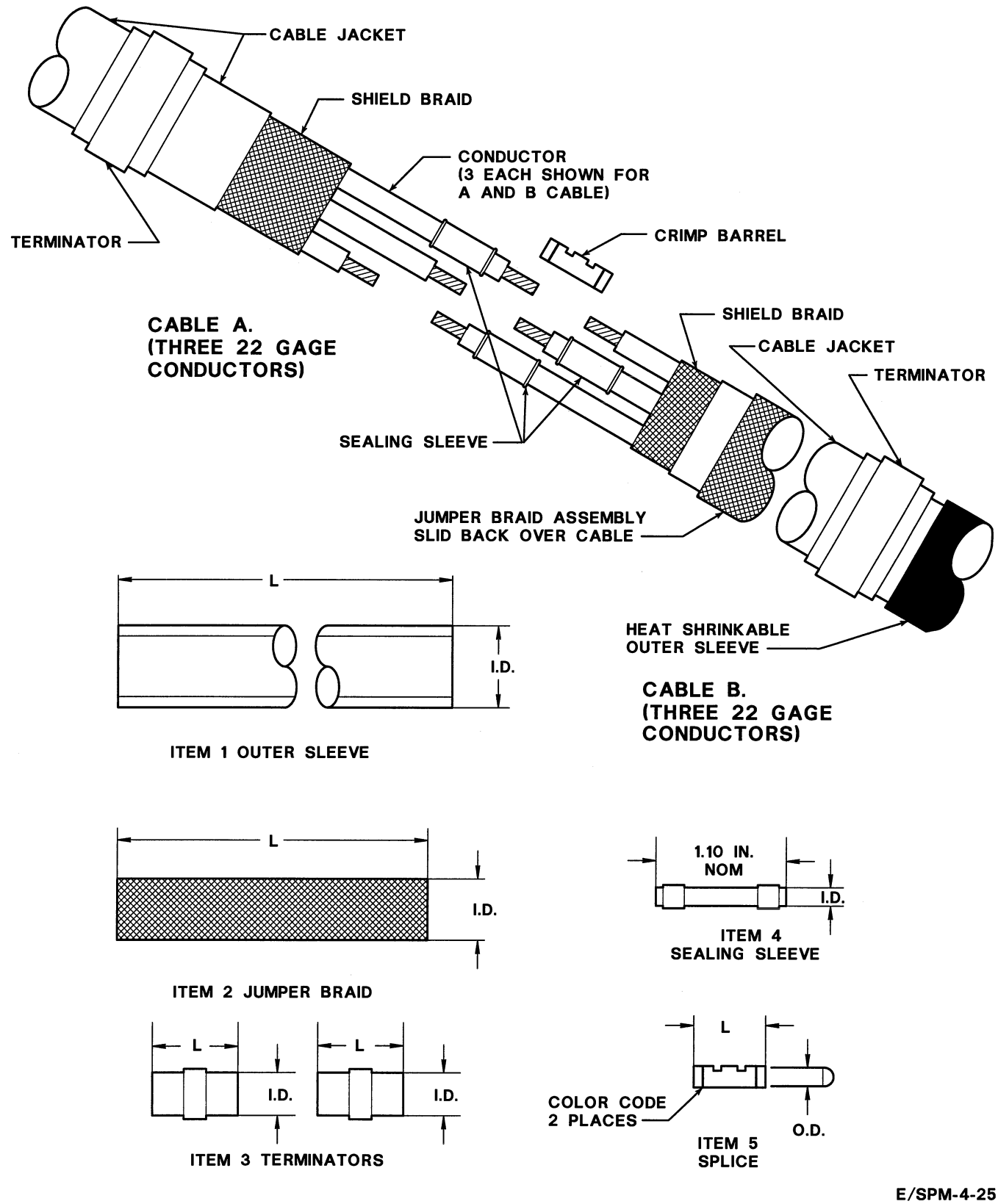

Figure 4-25. Example — 3-conductor shielded cable splice

8. INSULATION OF SPLICE.

a. Center heat shrinkable outer sleeve over completed splice.

b. Heat outer sleeve, starting in center, work toward one end and then the other. Move splice through heat slowing enough to keep sleeve recovering.

c. Inspection. Ensure no splits or tears are present on sleeve.

NOTE

BAS-KIT-010 (EC-066) contains materials and instructions to make shielded cable splices.

9. FILTER LINE CABLE TERMINATIONS.

Procedures for terminating shielded and jacketed filter line cables are shown in table 4-12.

4-7. CONTACT CRIMPING PROCEDURES.

1. CRIMPING TOOLS. Crimping may be accomplished with hand tools that are cycle controlled by a precision ratchet that releases the handles at the proper crimp depth. Crimp tools have a turret or positioner to select the proper crimp depth for a specified contact and wire size.

2. CONTACT CRIMPING. The optimum method of attaching wire to the contact is by crimping the barrel of the contact around the wire. This controlled compression gives reliable mechanical strength and electrical continuity. Crimping requires exact wire preparation and the proper tool to maintain manufacturers standards for the equipment. Each contact has a viewing hole in the barrel to ensure proper placement of the wire.

3. CRIMPING CONFIGURATIONS. The four indent crimp provides the most uniform displacement of wire and contact material and is used as the MIL standard. Refer to figure 4-26. The impression of the crimp horizontally for MIL standard is the octadent which is illustrated in figure 4-27.

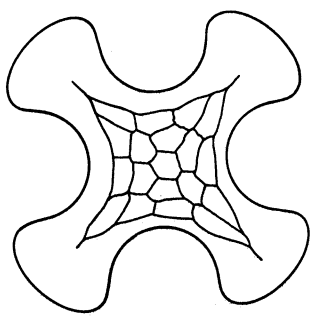

E/SPM-4-26

Figure 4-26. 4 Indenture crimp

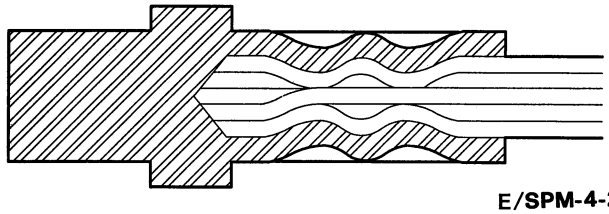

E/SPM-4-27

Figure 4-27. Octadent crimp

4. M22520 CRIMP TOOL. Refer to figure 4-28 for identification and operation of this tool. The basic M22520/2-01 and M22520/7-01 tool use locating devices known as positioners. They are individual locaters with a data plate attached to the top which specifies the contact part number(s) accommodated, and correlates the wire size with the tool selector setting. MIL-C-22520/7 positioners can only be used on the M22520/7-01 basic tool. A typical positioner is shown in figure 4-28.

5. TURRET HEADS. Turret Heads. These heads have a turret which has three separate POSITIONERS that are color-coded and marked with the applicable contact size accommodated by each individual positioner within the head. The color and contact size correspond to the information on the foil label (data plate) attached to the side of the head. The proper positioner is selected for the contact type and size to be crimped by referring to the data plate. A typical turret head is shown in figure 4-28.

a. The procedures for crimping contacts to wire conductor is as follows:

(1) Select proper positioning head to be used for contacts being crimped.

(2) If the head to be used is a turret head, first depress the turret trigger to release the turret to the indexing or extended position as shown in figure 4-28.

(3) Place the head over the retaining ring on the back of the tool (selector side) and seated against the tool body; secure the 9/64 socket head screws with an Allen wrench. If positioning head is single positioner type, omit steps 4. and 5.

(4) If the positioning head is turret type, it has three separate positioners that are color coded and marked with applicable contact size accommodated by each individual positioner. Refer to data plate to select proper positioner to be used for contact being crimped.

Table 4-12. Termination of shield and jacketed filter line cable

1. Cut slit and remove jacket from end of cable:

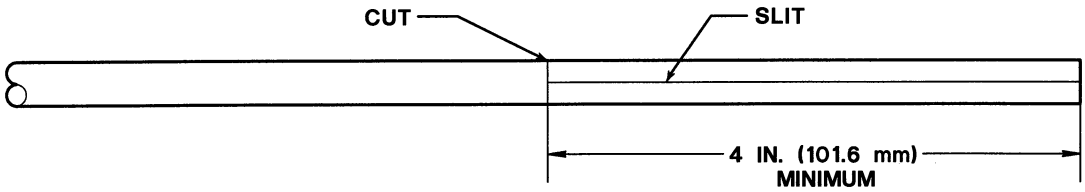

2. Bunch, cut, and remove braided shield:

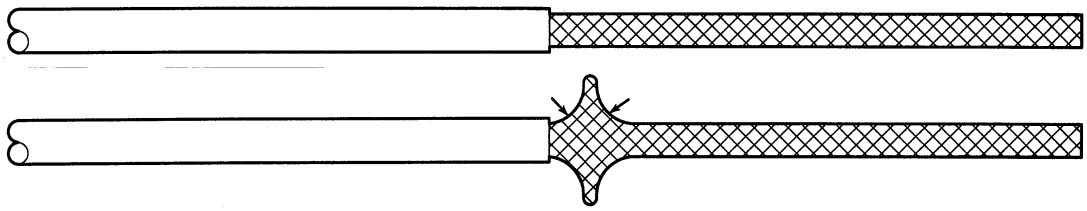

NOTE

Stripping procedures of filter line shielded jacketed cable for termination into junction modules and other terminating devices other than connectors shall be in accordance with paragraph 4-5, step 3.

3. Cut, slit, and remove jacket:

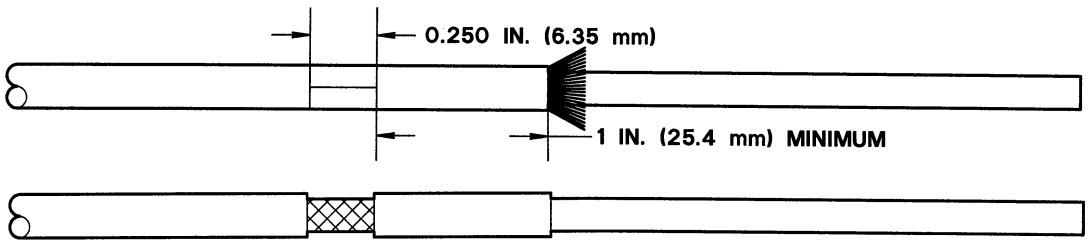

4. Position solder sleeve termination and heat with hot air:

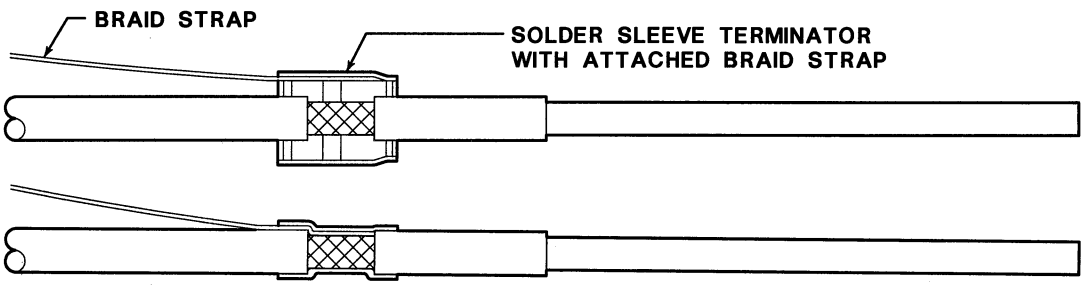

5. Install protective sleeve (EC-069) using hot air:

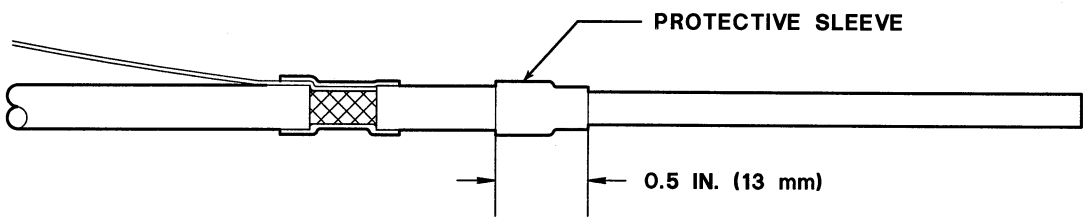

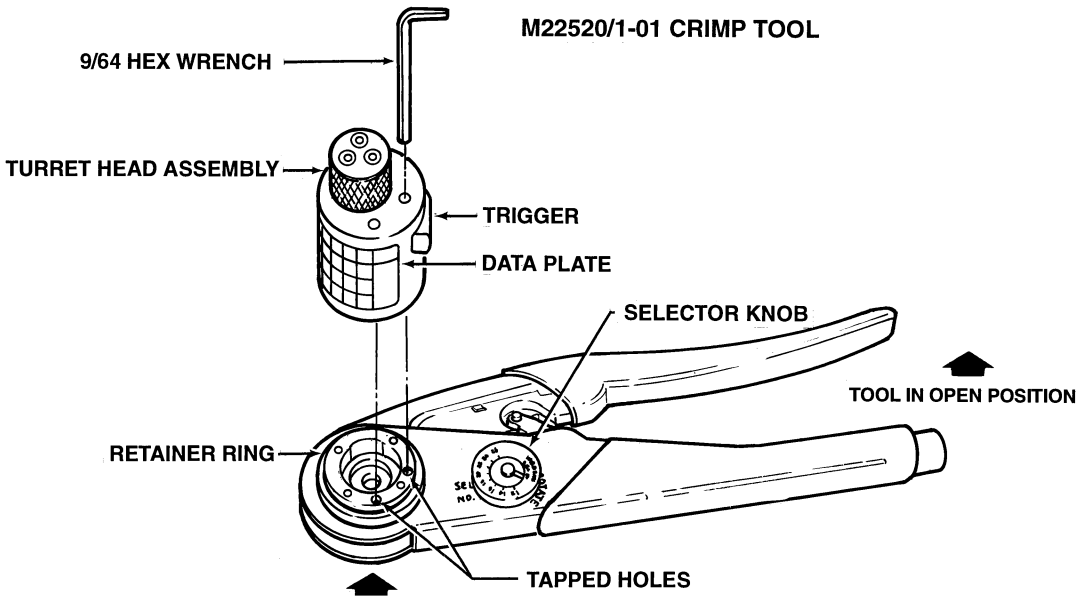

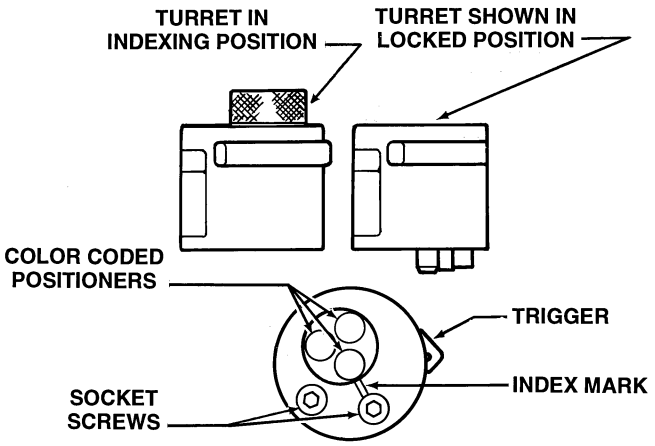

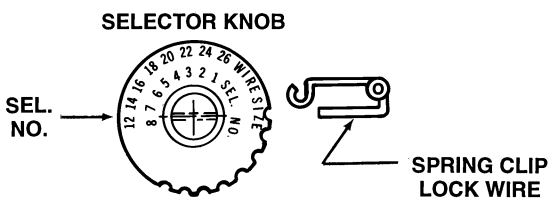

Instructions for changing Turret head:

1. Press trigger which releases Turret to indexing position.
2. Place selected Turret Head assembly onto retainer ring with screws lined up with tapped holes.
3. After Turret Head assembly is seated against ring, tighten socket head screws with 9/64 inch Allen wrench. Turret should index easily without binding.
4. To remove, loosen socket head screws until threads are disengaged from retainer ring and remove with a straight lifting motion.
5. All heads (single position, universal and turret) are attached by means of two socket head screws.

Instructions for Indexing Turret Head Assemblies:

1. Press trigger which releases Turret to indexing position.
2. Select positioner desired from color coded data plate on side of Turret Head assembly.
3. Index Turret until color colded positioner is lined up with Index mark on top of Turret Head assembly, at which time the trigger will position the Turret.
4. Press Turret until it snaps into locked position.

Instructions for Using Indentor Closure Selector:

1. Refer to data plate on Turret Head assembly. Below the wire size and opposite the contact size is listed the correct indentor closure number.
2. Remove the spring clip lock from selector knob.
3. Tool must be in open position when using selector.
4. Raise selector knob and rotate to desired selector number.
5. Replace the spring clip and tool is ready for use.
6. Repeat instruction procedures when changing contact and/or wire sizes.

E/SPM-4-28-1

Figure 4-28. Turret head crimper (Sheet 1 of 2)

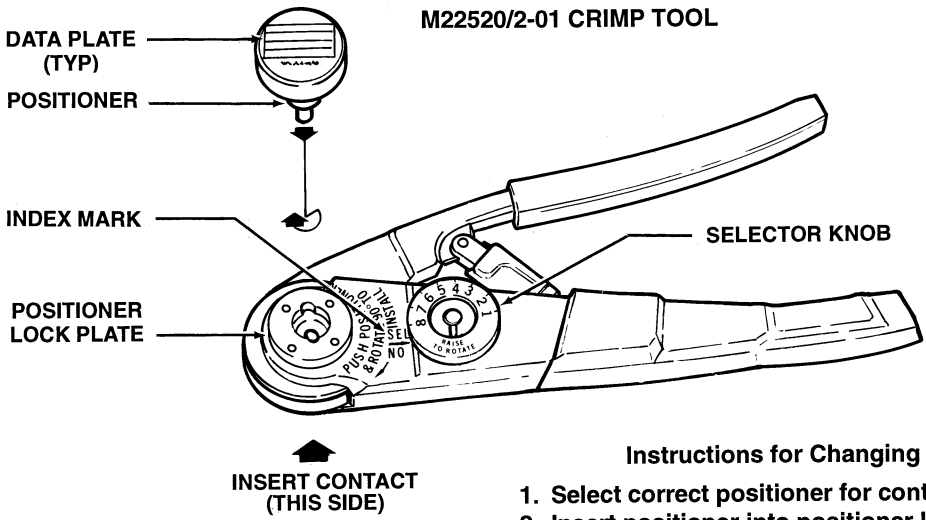

Instructions for Changing Positioners

1. Select correct positioner for contact being crimped.
2. Insert positioner into positioner lock plate. Push and rotate 90° to install.
3. Determine correct selector setting for the wire size from the data plate on end of positioner.
4. Lift selector knob and rotate until selector number aligns with Index mark.
5. Tool is now ready for use. Insert contact and complete crimping cycle.

CRIMPING INSTRUCTIONS

1. Insert contact thru indentor opening into positioner.
2. Insert wire into contact and hold securely to insure that it bottoms in contact. Close handles until tool bottoms and ratchet "Kicks Off". Release handles and remove crimped contact.

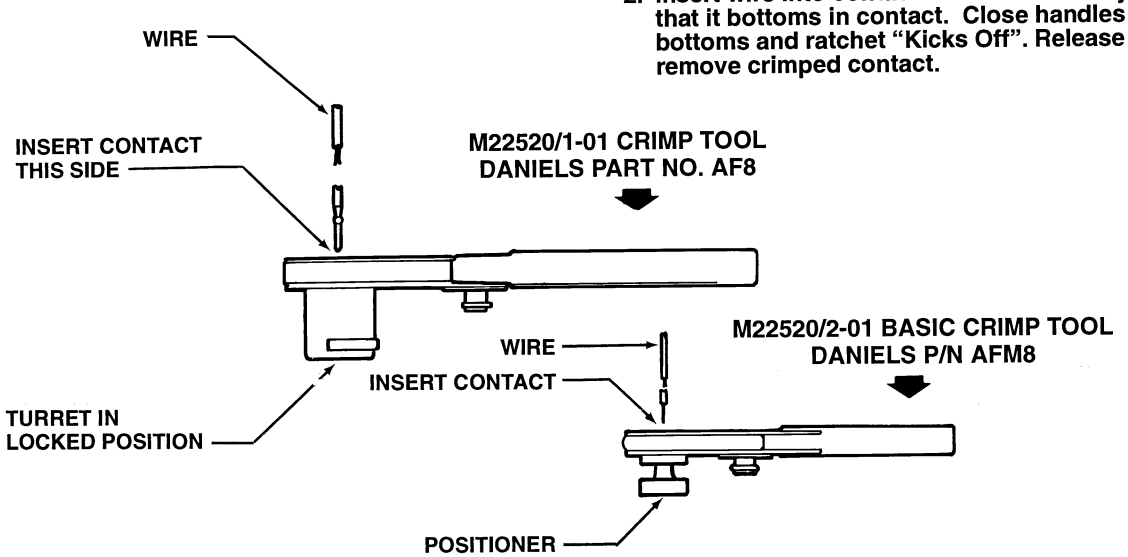

NOTE: After crimping cycle is completed, inspect contact. Make sure the wire is visible thru inspection hole and there are no fractures in contact.

E/SPM-4-28-2

Figure 4-28. Turret head crimper (Sheet 2)

(5) Rotate turret until correct positioner is lined up with the index mark on turret head and push turret in until it snaps into locked position.

(6) Refer again to data plate for correct selector setting for wire size being used. With handles fully open, remove spring clip lockwire from selector knob, lift and rotate selector knob (or slide the thumb button) to the correct setting and release. Refer to figure 4-28. Install spring clip lockwire.

(7) Determine the proper length of insulation to be stripped. Wire must be visible in inspection hole and there should be a 0.000 to 0.031 inch gap between the contact and the wire insulation. See figure 4-29.

NOTE

When crimping contacts with an insulation support cup, make sure the insulation extends into it 0.000 to 0.031 inch (0.40 to 0.80 mm) from bottom of cup.

(8) Insert the stripped wire into wire barrel of contact until the end of the wire can be seen through the inspection hole. Insert wire and contact through indenters on front side of tool (opposite from selector side) until it bottoms and fully seats in positioner.

(9) Hold the wire and contact in place and squeeze tool handles until they fully bottom and ratchet releases, thus allowing handles to automatically return to the open position.

(10) Remove the crimped contact and inspect. Refer to step 7 and figure 4-29.

6. SINGLE POSITION HEAD (POSITIONER). The procedure for crimping contacts utilizing the positioner is as follows:

a. Select the proper positioner to be used for the contact being crimped.

b. Insert the positioner into the retaining ring on back of tool selector side. Refer to figure 4-28. The positioner is spring-loaded and must be pushed in then rotated 90 degrees clockwise until it locks into position. Insert spring clip lockwire, if present, through retaining ring.

c. Refer to the data plate for correct selector setting for wire size being used. With handles fully open, remove spring clip lockwire from selector knob, lift and rotate selector knob to correct setting and release and reinstall spring clip lockwire.

d. Strip wire as described in paragraph 4-3.

e. Insert wire and contact; crimp and inspect as per step 7 and figure 4-29.

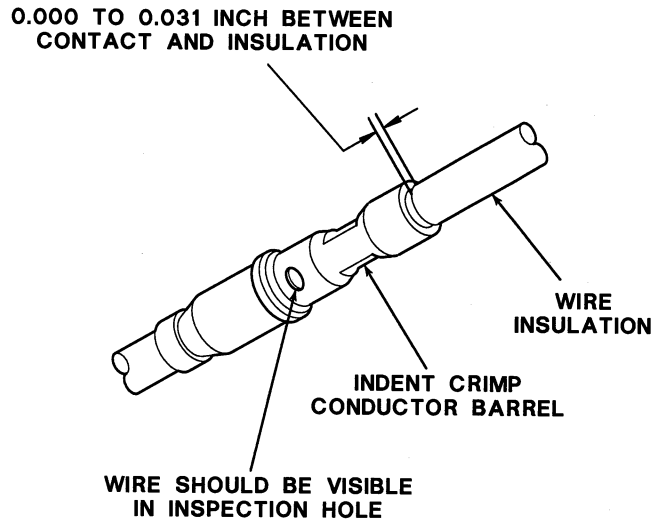

CRIMPED CONTACT

E/SPM-4-29

Figure 4-29. Correct crimped connector pin

7. CRIMP INSPECTION. Inspect crimped contact for the following. Refer to figure 4-29.

a. Wire is visible through inspection hole in wire barrel. No wire strands shall protrude through inspection hole.

b. Position of crimp impression is midway on wire barrel. (2 series of 4 indents)

c. Insulation gap should be less than 0.031 inch.

d. Contact is not bent or distorted.

e. Wire strands shall not be nicked or loose.

f. Contact wire barrel is not cracked and plating is intact.

g. All wire strands shall be inside contact barrel and inserted to bottom of barrel.

NOTE

The following instructions in step 8 are to be used as a guideline. Always refer to the tool manufacturers recommended instructions for inspection.

8. TOOL INSPECTION GAGING. All crimping tools can be checked for proper calibration of the crimping jaws (indenters) by means of GO/NO-GO inspection gages. If the GO gage does not pass through indenter tips and/or

NO-GO gage passes through the tips, do not use the tool but return it for repair. The tools should be checked before each series of crimping operations. Proceed as follows:

CAUTION

DO NOT CRIMP DOWN ON THE GAGE PINS AS THIS WILL PREVENT THE TOOL FROM FULL CYCLING TO THE RATCHET RELEASE POSITION.

a. Inspection of the M22520/01, M22520/2-01, and M22520/7-01 Basic Tool. Inspection gaging is performed on the basic tool only. The tools may be gaged with a positioning device installed, as long as it does not interfere with the gage operation. If the presence of the positioning device makes gaging difficult, remove it before inspecting.

b. The inspection procedure is as follows:

(1) Select the proper inspection gage to be used from table 4-13.

(2) Set the selector at the proper selector number as specified in table 4-13.

(3) Close the handles completely and hold.

Table 4-13. Crimp tool inspection gages

Crimping Tool Part Number	Inspection Gage Part Number	Selector Setting
M22510/1-01	M22520/3-1	4
M22520/2-01	M22520/3-1	8
M22520/7-01	M22520/3-3	8

(4) The GO gage (green end) should pass freely through the indenter. Refer to figure 4-30

(5) The NO-GO gage (red end) should not enter through the indenter tips. Refer to figure 4-30

4-8. CONTACT INSERTION/REMOVAL.

1. INSERTION TO FRONT RELEASE CONNECTORS. Insertion tools for inserting contacts into front release connector inserts are shown in figure 4-31. There is a separate tool for each contact size. Contact sizes are listed in table 4-14. An indicating band on the working end of the tool determines correct depth of tool insertion. Use these tools to insert contacts in front release connectors with removable contacts.

Table 4-14. Contact and wire size range

Contact Size	Wire Range Size
20	24 – 20
16	22 – 16
12	14 – 12
8	10 – 8
4	6 – 4
0	2 – 0

CAUTION

DO NOT USE TOOLS THAT HAVE BURRS OR SHARP EDGES. BURRS OR SHARP EDGES CAN CUT THROUGH GROMMET WIRE SEALING WEBS AND DESTROY THE ENVIRONMENTAL SEALING CAPABILITIES OF A CONNECTOR.

a. Insert the crimped contact into the connector as follows:

(1) Slide rear accessories back onto wire bundle.

(2) Select the correct insertion tool and insert the crimped end of the contact into the hollow end of the insertion tool and lay wire in handle. Refer to table 4-14.

(3) Guide the contact into the correctly numbered grommet hole in the rear face of the insert and feed the contact carefully into the hole.

NOTE

Isopropyl alcohol can be used as a lubricant.

(4) Push the tool straight in at right angles to the grommet surface until contact is fully seated.

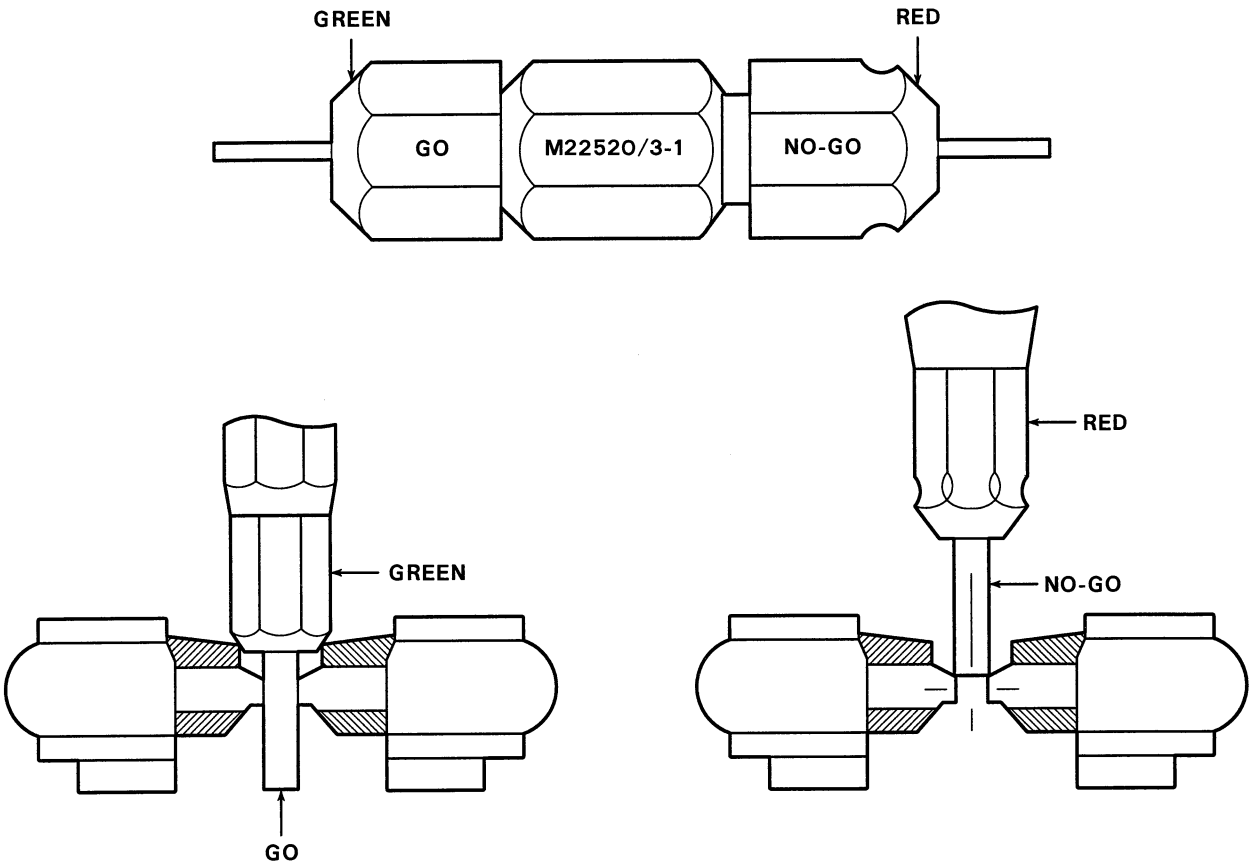

Figure 4-30. Crimp tool inspection tool guide

(5) Withdraw the tool keeping it perpendicular to the grommet face.

CAUTION

DO NOT ATTEMPT TO RESEAT A CONTACT ONCE THE INSERTION TOOL HAS BEEN REMOVED. REMOVE CONTACT AND START OVER AGAIN WITH CONTACT BARREL PROPERLY LOCATED IN TOOL. FAILURE TO FOLLOW THIS PRECAUTION WILL CAUSE INSERTION TOOL TO SHEAR BARREL WHILE INSIDE GROMMET. SHARP EDGE OF SHEARED MATERIAL WILL CUT THROUGH THE GROMMET WEB AND CAUSE A SHORT CIRCUIT.

b. Gently pull on wire to make sure contact is held in place.

(1) Fill all unused holes with unwired contacts and sealing plugs of appropriate size.

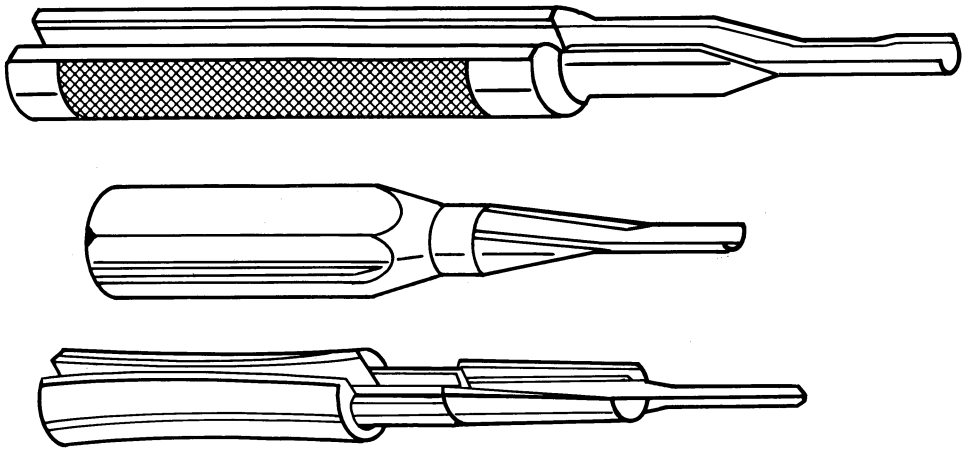

MS24256A20
MS24256A16

INSERTION TOOLS

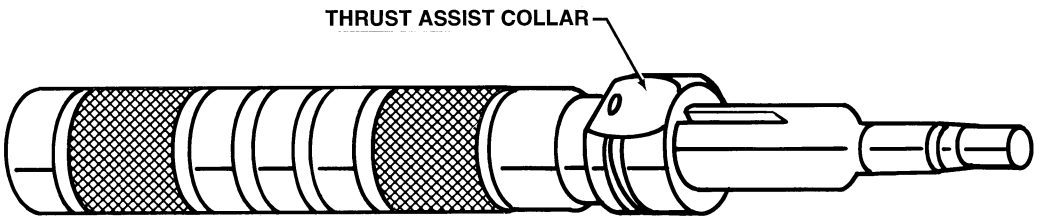

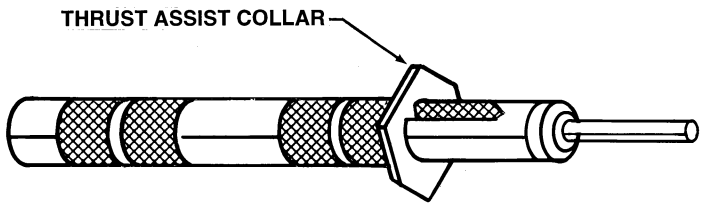

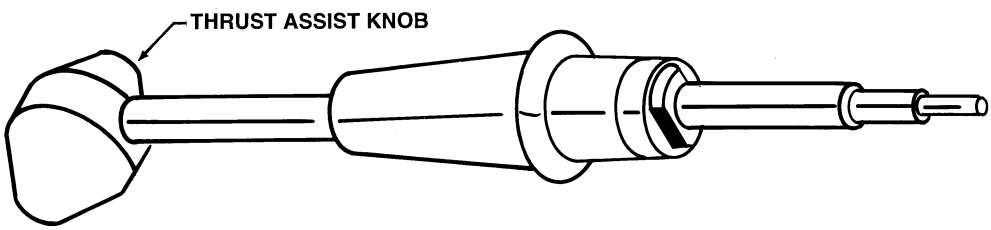

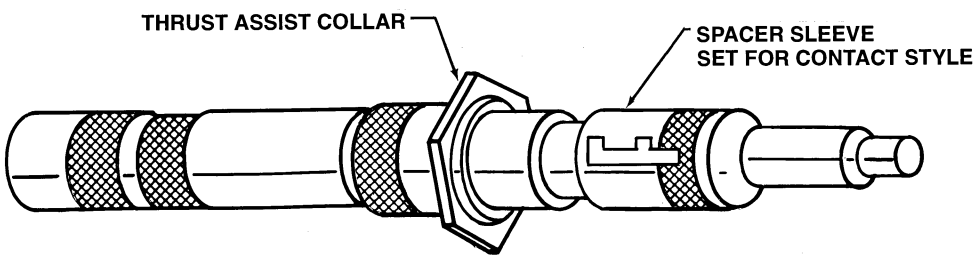

MS24256R20
MS24256R16

EXTRACTION TOOLS

E/SPM-4-31

Figure 4-31. Insertion and extraction tools for front release crimp-type contacts

2. REMOVAL FROM FRONT RELEASE CONNECTOR. Tools for extracting contacts from front release connector inserts are shown in figure 4-31. The sizes for each contact are listed in table 4-14. Extraction tools have a hollow cylindrical probe which fits snugly over the pin or socket end of the contact and releases the insert retention clip when pushed over the contact. Two indicating bands determine correct depth; the band nearest the working end of the tool is for pin contacts, the other for socket contacts. The extraction tool has a thrust assist collar (or slide) which is pushed forward to eject the contact from the insert retention clip by means of an internal plunger.

a. Select the correct extraction tool for the contact to be removed.

CAUTION

MAKE SURE THE EXTRACTION TOOL IS ALWAYS EXACTLY ALIGNED WITH THE CONTACT TO AVOID DAMAGE TO THE CONTACT OR INSERT.

b. Working from the front of mating end of the connector, slip the hollow end of the extraction tool over the contact, with the tool parallel to the contact and squarely perpendicular to the insert face. Refer to figure 4-32

NOTE

Some extraction tools have a spacer sleeve with positions for either pin or socket contacts. Set to correct position before installing tool on contact.

c. Push the tool toward the rear of the connector with a firm steady push until the tool comes to a positive stop and bottoms in the insert hole. A slight rotation of the tool may aid the tool insertion.

d. Push the thrust assist collar or slide forward as far as it will go.

e. Withdraw the tool from the contact, keeping the tool perpendicular to the insert face.

f. Remove the contact from the back of the connector.

3. CONTACT INSERTION FOR REAR RELEASE CONNECTOR. Insertion tools may be single ended, or double ended. Each is color-coded to contact size. Refer to table 4-15. Connector rear accessories (cable clamp, etc.) must be removed prior to installation or removal of contacts.

NOTE

Connectors having contacts which are installed and removed from the rear of the connector have blue color bands around them.

a. Contact installation with single or double ended tool. Refer to figure 4-33

(1) Select correct installation tool and place contact wire in groove of installation tool.

CAUTION

CONTACT MUST BE INSERTED PERPENDICULAR TO THE FACE OF THE CONNECTOR. DO NOT TIP, SPREAD, OR ROTATE THE TOOL WHILE IN THE CONNECTOR.

(2) Slide tool down wire on to contact crimp barrel until it butts against the contact shoulder.

Table 4-15. Insertion/removal tool for rear release contacts

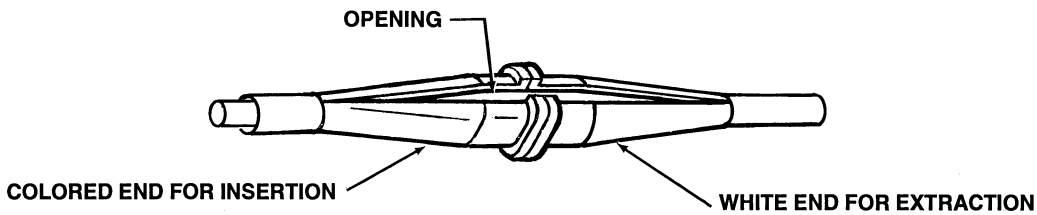

E/SPM TABLE #4-20

Tool Part No.	Insertion End	Removal End
M81969/14-04	Yellow	White
M81969/14-03	Blue	White
M81969/14-10 M81969/14-11	Red	White
M81969/14-01	Green	White

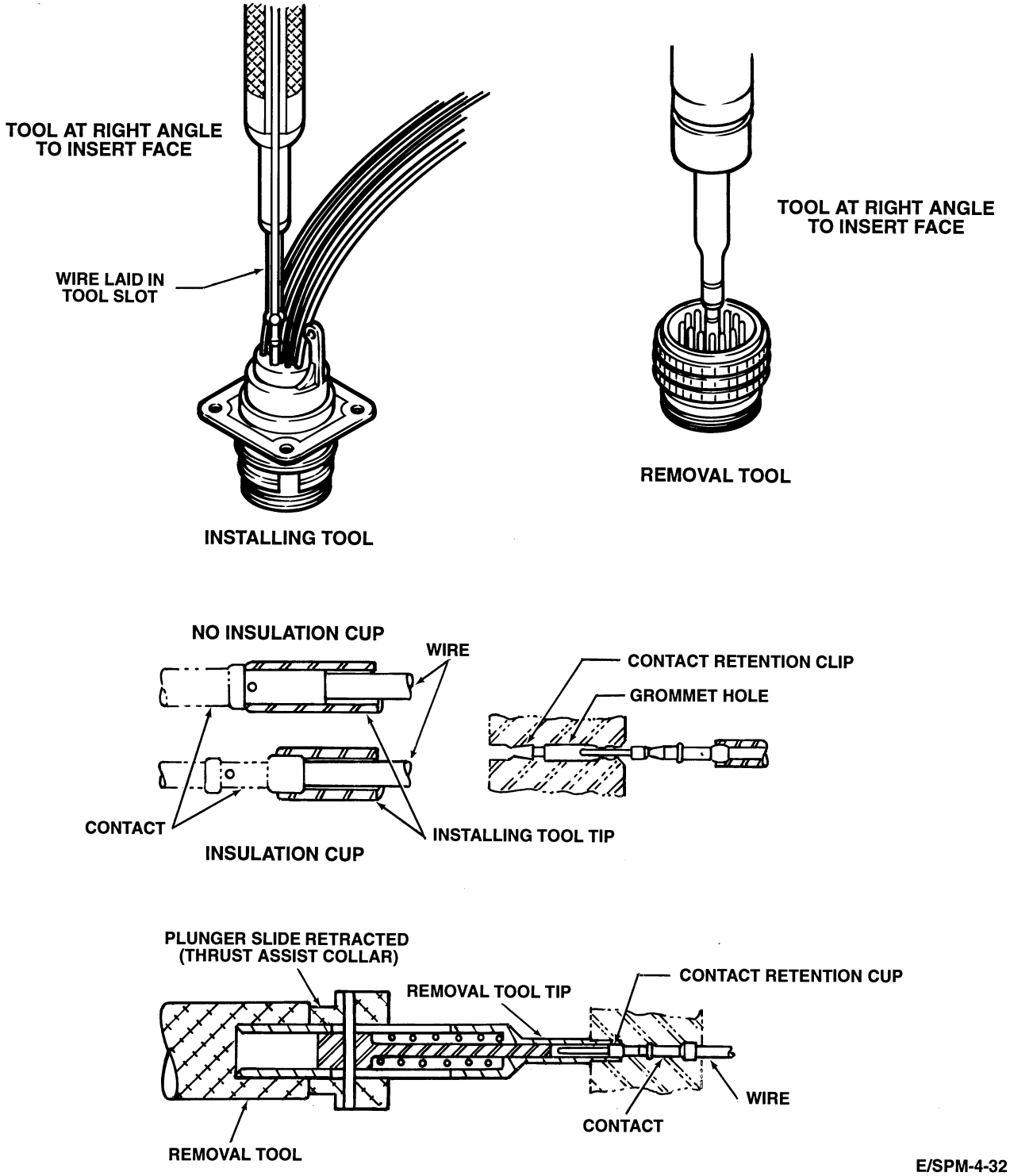

Figure 4-32. Installation and removal of crimp contacts

INSTRUCTIONS FOR PLASTIC TOOLS

INSTALLING (COLORED END)

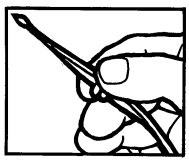

1. Hold the insertion half of tool (colored) between the thumb and forefinger and lay the wire to be inserted along the slot, leaving about 1/2 inch protruding from the end of the tool to the crimp barrel of the contact.

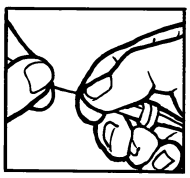

2. Squeeze the wire hard into the tool at the tip, between the thumb and forefinger and at the same time quickly pull the protruding wire with the other hand away from the tool.

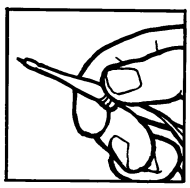

3. The wire will now have snapped into place. Pull it back through tool until the tip seats on the back end of the crimp barrel.

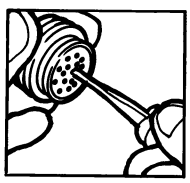

4. Holding the connector with the rear seal facing you slowly push the contact straight into the connector seal.

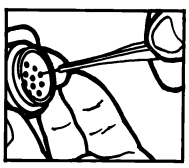

5. A firm stop will be evident when the contact positively seats in the connector.

REMOVAL (WHITE END)

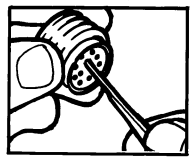

1. With the rear of connector facing you, lay the wire of contact to be removed along the slot of removal half (White) of the tool, leaving about 1/2 inch from the end of the tool to the rear of the connector.

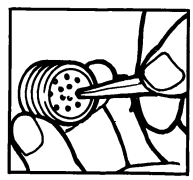

2. Squeeze the wire hard into the tool between the thumb and forefinger about 1/2 inch from the tip and at the same time quickly pull the connector away from the tool with the other hand.

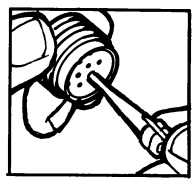

3. The wire will now have snapped into place. Slide the tool down over the wire and into the rear seal and push it slowly into the connector until a positive resistance is felt. At this time, the contact retaining clip is in the unlock position.

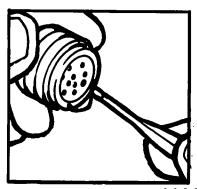

4. Press the wire of the contact to be removed against the connections of the plastic tool and pull both the tool and the contact-wire assembly out of the connector.

CAUTION

DO NOT TIP, SPREAD OR ROTATE TOOL WHILE IN CONNECTOR.

REAR RELEASE CONNECTORS IDENTIFICATION

MATED PLUG AND RECEPTACLE

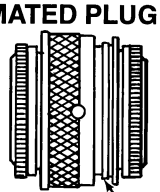

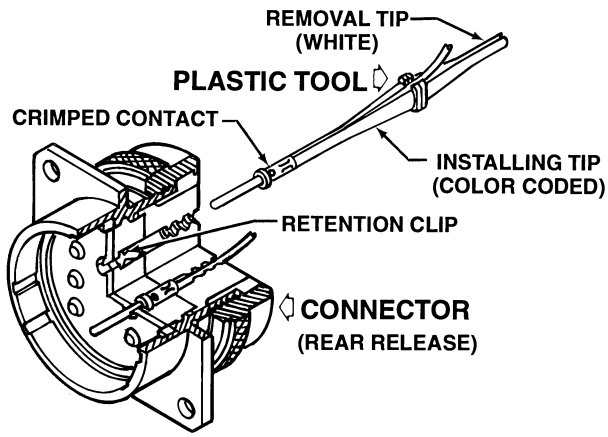

Connectors having contacts which are installed and removed from the rear of the connector have BLUE color bands around them.

E/SPM-4-33

Figure 4-33. M81969/14 Plastic-type insertion/removal tool

(3) Grip tool, wire, and contact as a unit and guide contact into connector through sealing grommet and insert until contact is firmly seated.

(4) Release grip on wire and withdraw tool from the connector until it clears the grommet. Hold wire forward while tool is being removed from wire.

(5) Gently pull wire to ensure contact is secure in connector.

4. CONTACT REMOVAL FROM REAR RELEASE CONNECTOR.

NOTE

For unwired contacts, an additional tool may have to be used in conjunction with the extraction tool to push the unwired contact from the front after the locking tines have been released by the extraction tool in rear.

a. Remove with tweezer-type installation tool.

(1) Select correct removal tool.

(2) Compress tweezer handles to open tips and place wire in groove. Reduce pressure on the handles, allowing tips to close without nicking or cutting the insulation. Slide tool down wire into connector until it stops to release spring clip.

CAUTION

DO NOT EXERT EXCESSIVE FORCE ON WIRE. IF CONTACT IS NOT EASILY EXTRACTED, REMOVE TOOL AND REPEAT PROCEDURES.

(3) To remove contact, pull on wire while withdrawing tool.

b. Removal with single or double ended contact removal tool.

(1) Select correct removal tool and place around the attached wire to be removed.

CAUTION

TO AVOID DAMAGE TO TOOL AND/OR CONNECTOR, DO NOT TIP, SPREAD, OR ROTATE TOOL WHILE IN CONNECTOR.

(2) Slide tool down wire into the connector through the sealing grommet and into the insert until the tool stops against contact shoulder.

(3) Grip wire and tool as a unit and withdraw wire, tool, and contact from the connector simultaneously.

4-9. SOLDERLESS TERMINALS.

1. GENERAL. Electrical copper wires and cables are terminated with crimp-type tinned copper terminal lugs to provide an easy and reliable method of making connections and disconnections.

Crimp-type terminal lugs are tinned copper with the barrel preinsulated or uninsulated depending on application. The insulated types have a tube of polytetrafluoroethylene (TFE) or similar material permanently affixed to the copper barrel.

This paragraph describes recommended methods for terminating copper and aluminum wires, using solderless terminal lugs. It also describes recommended methods for permanently joining (splicing) wire, using solderless splices. Figure 4-34 illustrates a typical solderless terminal.

Hand, portable power, and stationary power tools are available for crimping terminal lugs. These tools crimp the barrel to the conductor, and simultaneously form the insulation support to the wire insulation. Use standard (Class 1) tools; M22520/5-01 tool with M22520/5-100 dies for sizes 26 through 10 to crimp standard copper terminal lugs M25036, M7928/1, and M7928/2.

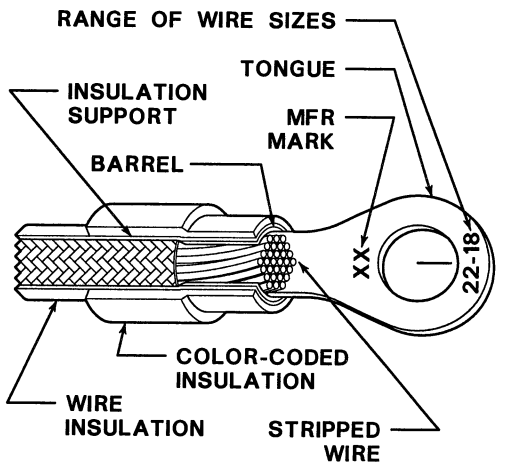

Figure 4-34. Pre-insulated terminal — cutaway

2. TERMINAL TYPES.

a. Copper wire, sizes 26 through 10 are terminated with crimp preinsulated tinned copper terminal lugs. Figure 4-34 shows the insulation as a permanent part of the terminal lug extending beyond the end of the barrel so that it covers a portion of the wire insulation. This eliminates using insulation sleeves. In addition, preinsulated copper terminal lugs have a wire insulation grip barrel beneath the insulation sleeve for additional termination mechanical strength. Pre-insulated crimp-type copper terminal lugs accommodate more than one copper wire size therefore the insulation sleeve is color-coded. This facilitates the identity of the wire sizes that can be terminated by each of the terminal lugs. Refer to table 4-17 to identify the wire sizes for each color code.

3. HIGH PRESSURE CRIMPING.

a. Wire sizes 8 through 2 require a power operated crimp tool for terminations and splices. The following procedures are referenced to the AMP Hydraulic hand tool 59975-1. Refer to figure 4-35

(1) For die selection.

(a) Press head latch and open crimp head as illustrated in figure 4-36.

(b) Pull back die latch and rotate thumb knob until desired die size appears.

(c) Rotate thumb knob left or right until die latch locks wheel in desired position.

(d) Close head.

Table 4-16. Wire stripping for 2 through 8 wire

WIRE SIZE	WIRE STRIP LENGTH			
	TERMINALS		BUTT SPLICES AND PARALLEL SPLICES	
(AWG)	MIN	MAX	MIN	MAX
8	21/64	23/64	13/32	7/16
6	25/64	27/64	15/32	1/2
4	29/64	31/64	17/32	9/16
2	33/64	35/64	19/32	5/8

Table 4-17. Color coding of copper terminal lug insulation

Terminal lug insulation color	Wire sizes used with
Yellow	26 – 24
Red	22 – 20, 18
Blue	16 – 14
Yellow	12 – 10

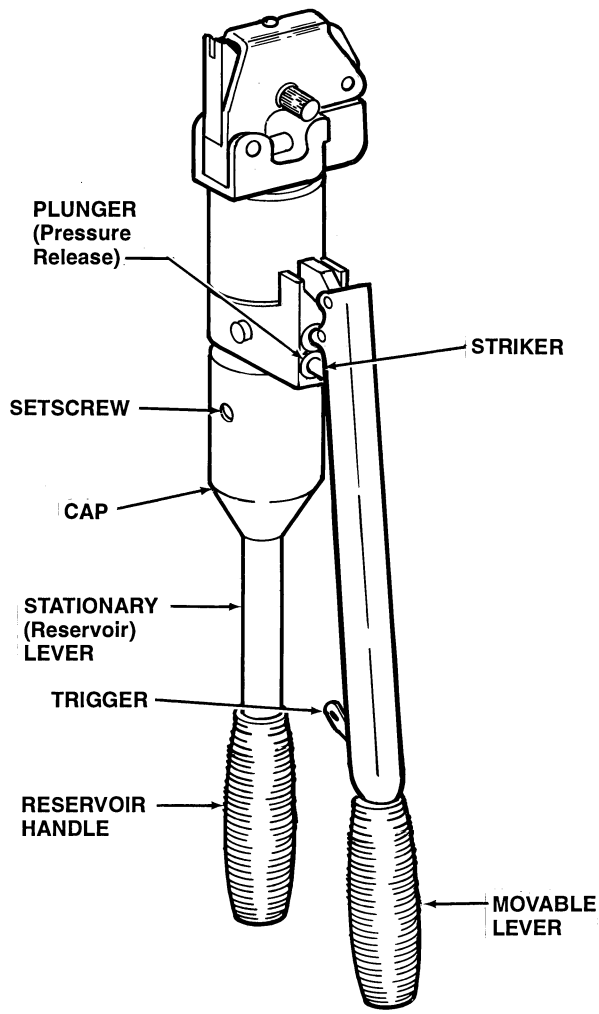

Figure 4-35. AMP Hydraulic hand crimper

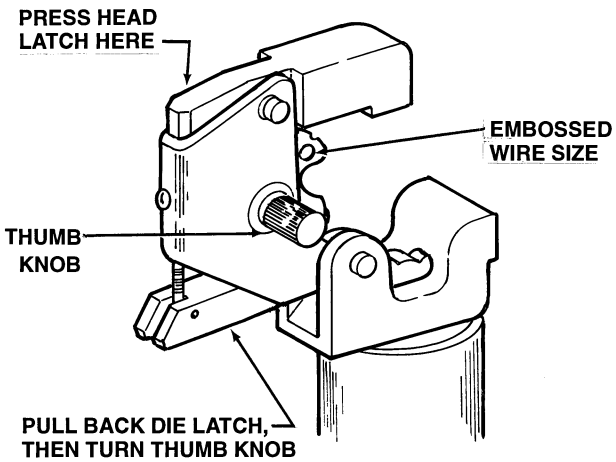

E/SPM-4-36

Figure 4-36. Hydraulic crimp head

(2) Crimping procedure.

(a) Strip wire to dimensions listed in table 4-16.

(b) Insert terminal or splice in upper die as shown in figure 4-37.

(c) Pump lever until lower die grips terminal or splice.

(d) Insert stripped wire into wire barrel of terminal or splice.

(e) Pump lever until an audible pop is heard to indicate completion of crimp.

(f) Retract movable die by pulling movable lever slightly outward. Then, while squeezing trigger (to actuate striker) compress levers to depress plunger. Movable die will now retract.

(3) Inspect crimp for the following criteria:

(a) Centering of crimp (crimp may be off center but not off end of wire barrel).

(b) Wire size being used matches wire range stamped on die position and terminal.

(c) End of wire is flush with or extends slightly beyond end of wire barrel.

(d) There are no nicked or missing strands.

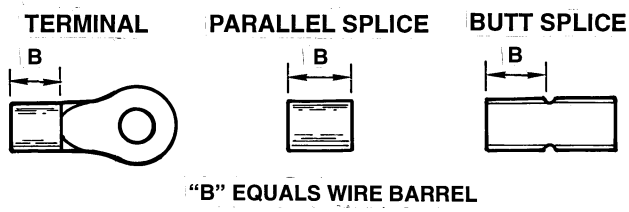

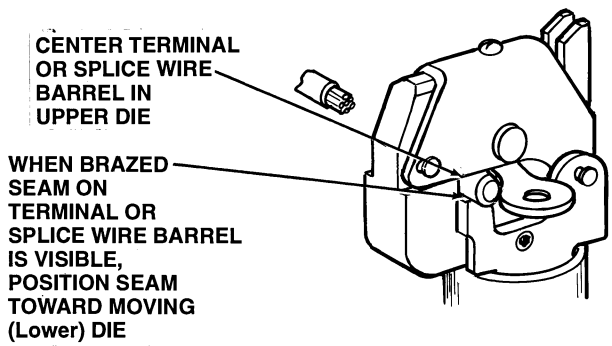

E/SPM-4-37

Figure 4-37. Terminal or splice positioning

4. HAND CRIMP TOOLS. M22520 hand crimping tools have a self-locking ratchet which prevents the tools from opening until crimp is complete. Refer to figure 39, 40, and 41. This mechanism must never be disassembled since it ensures proper crimping closure. These tools are checked by means of a gage for assurance of quality crimps. For good crimping results, gaging is done before each series of crimping operations. The M22520/5-01 tool with M22520/5-100 die is checked with gage M22520/3-9 for No. 12 and No. 10 die closure, and M22520/3-10 for the No. 26 through No. 14 die closure. Gaging is done with the tools in the fully closed position. Return tools which are out of tolerance for repair. A hand crimping tool for high temperature terminals is shown in figure 4-38.

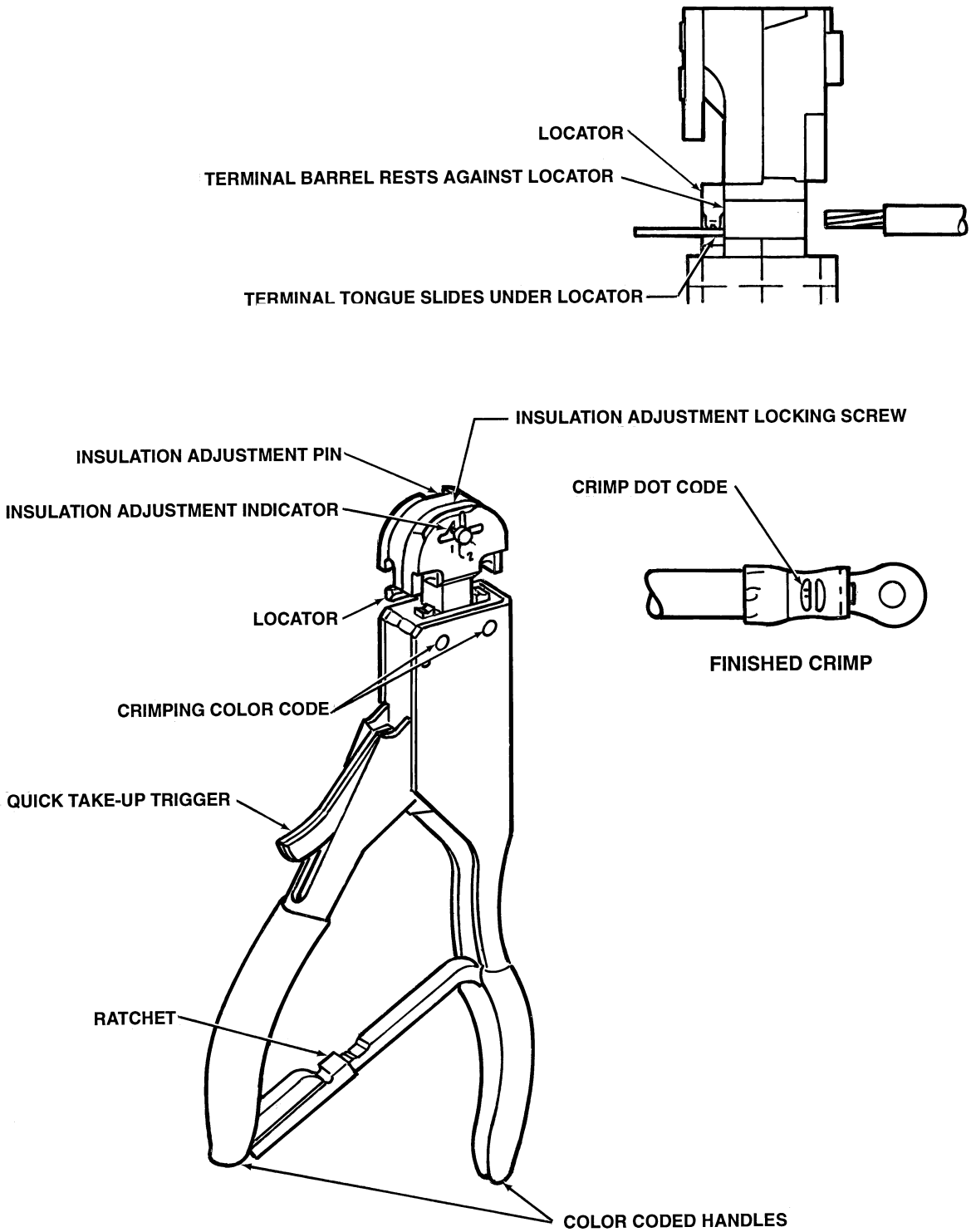

Figure 4-38. AMP Crimping tool T-head 59250 for high temperature terminals

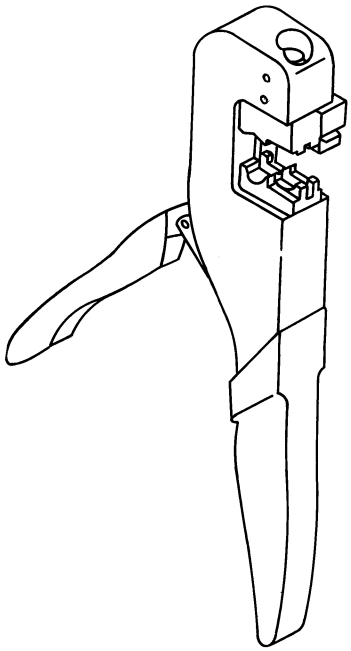

E/SPM-4-39

Figure 4-39. M22520 Series die type crimp tool

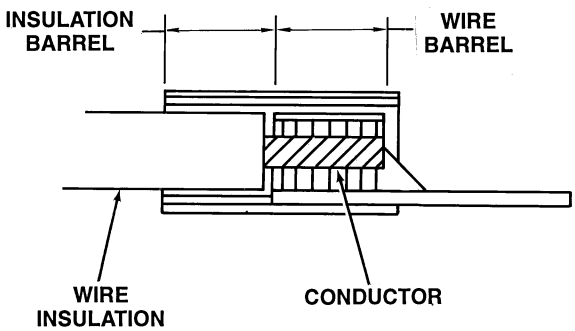

E/SPM-4-40

Figure 4-40. Insertion of wire into insulated terminal lug

5. CRIMPING PROCEDURE.

CAUTION

IF NOT PROPERLY STRIPPED, SOME OF THE SMALLER GAGE THIN-WALL WIRE INSULATION CAN BE INADVERTENTLY INSERTED AND CRIMPED IN THE TERMINAL BARREL.

a. Strip wire insulation dimension given in table 4-18.

Table 4-18. Wire stripping lengths for small copper terminal lugs (insulation restriction)

Wire size	Strip length (In inches)
26 and 24	5/32 (3.97 mm)
22 and 20	3/16 (4.76 mm)
18 – 14	1/4 (6.35 mm)
12 and 102	9/32 (7.14 mm)

b. Check tool with gage M22520/3-9 for No. 12-10 die closure and M22520/3-10 for the No. 26-14 die closure. Tools out of adjustment must be returned for repairs.

c. Insert terminal lug, tongue first, into wire side of tool crimping jaws, until terminal lug barrel butts flush against tool stop on the locator.

d. Squeeze tool handles slowly until tool jaws hold terminal lug barrel firmly in place, but without denting it.

e. Insert stripped wire into terminal lug barrel until wire insulation butts flush against near end of wire barrel. Refer to figure 4-40.

f. Squeeze tool handles until ratchet releases.

6. INSPECTION OF CRIMPED CONNECTIONS. Examine the crimped connection carefully for the following:

CAUTION

DO NOT USE ANY CONNECTION WHICH IS FOUND DEFECTIVE AS A RESULT OF THE VISUAL INSPECTION. CUT OFF DEFECTIVE CONNECTION AND REMAKE USING A NEW TERMINAL LUG OR SPLICE.

a. Indent centered on terminal lug barrel or splice barrels.

b. Indent in line with barrel; not cracked.

c. Terminal lug or splice barrel not cracked, nicked, bent or distorted.

d. Terminal lug or splice insulation not cracked.

e. Insulation grip crimped.

f. All wire strands are inside terminal lug conductor barrel.

DIE INSTALLATION

1. Align groove in die with key in crimping tool and push shank of die into hole. See detail A. Close handle to make sure dies are properly seated and locked in place. the tool is now ready for use.

DIE REMOVAL

1. With crimping tool handle open, place die removal tool against end of knock-out pad and tap gently. See detail B. The die will be released from the lock spring and ejected approximately 1/16 inch. It can now be removed by hand.

2. Close the crimping tool handle and slide the die removal tool between the die and tool body. See detail C. Pull handle open with a snap action. The die will be released from the lock spring and can then be removed by hand.

M22520/5-01 & /10-01 CRIMP TOOLS

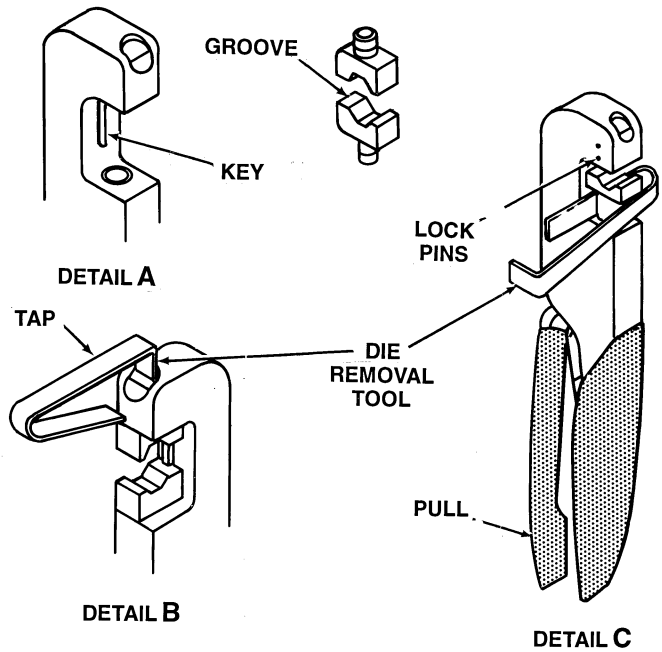

NOTE

DIE REMOVAL TOOL PART NO. HX3-82 FURNISHED WITH CRIMPING TOOL. (IF DIE REMOVAL TOOL IS NOT AVAILABLE, A ROD, 3/16 INCH X 1-3/4 INCHES (APPROX.) MAY BE USED.)

CAUTION

BEFORE ATTEMPTING TO REMOVE DIES FROM TOOL, ASSURE THAT ALL LOCK PINS HAVE BEEN REMOVED. FAILURE TO DO SO MAY RESULT IN SERIOUS DAMAGE TO THE TOOL.

DIE SET IDENTIFICATION

(M22520/10) AND (M22520/5) DIE SETS

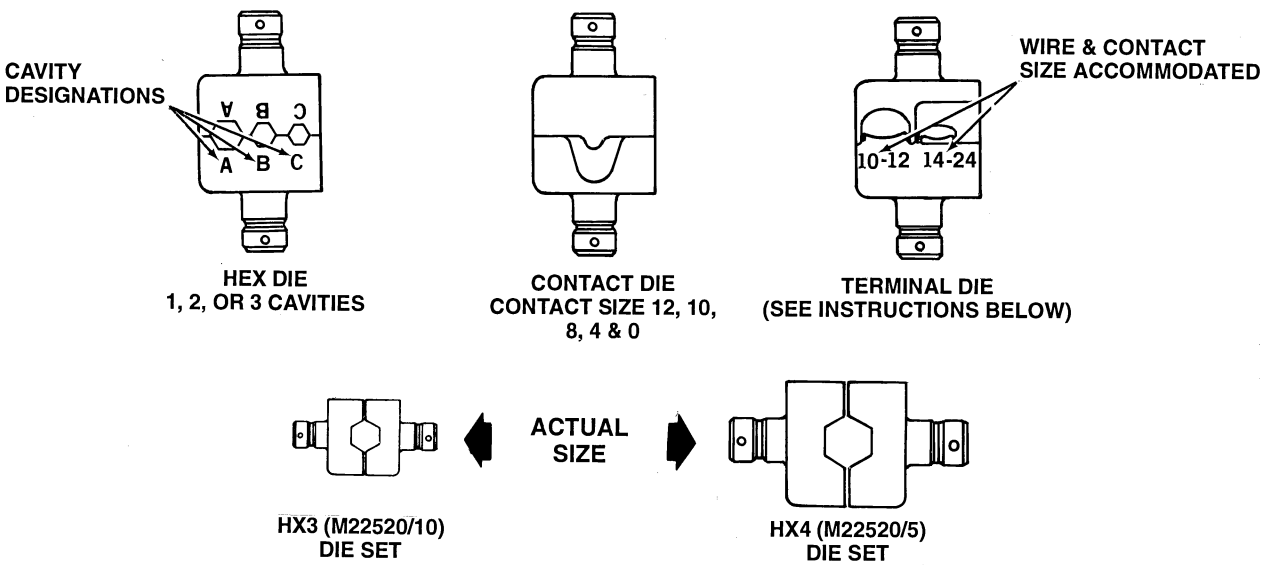

E/SPM-4-41-1

Figure 4-41. Crimp tools M22520/5-01 and /10-01 (Sheet 1 of 2)

DIES FOR CRIMPING TERMINAL LUGS, SPLICES AND END CAPS

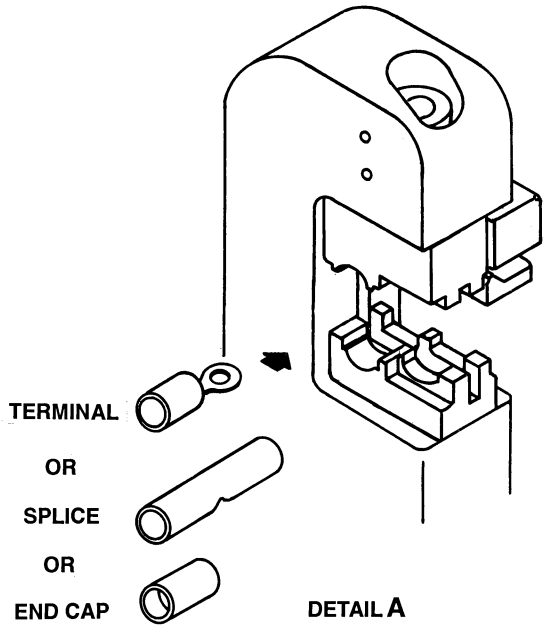

1. With dies open (see detail A), place terminal, splice or end cap in proper cavity. Sizes are stamped below each cavity on side of die.

2. Locate terminal, splice or end cap with locator (see detail B). Terminal should locate with tongue between the arms of the locator. Splice is centered with notch in splice resting on the locator. End caps locate against the face of the locator. Insert wire to proper depth.

3. Close handle of tool until dies are closed and ratchet releases. The crimp is now complete. (see detail C.)

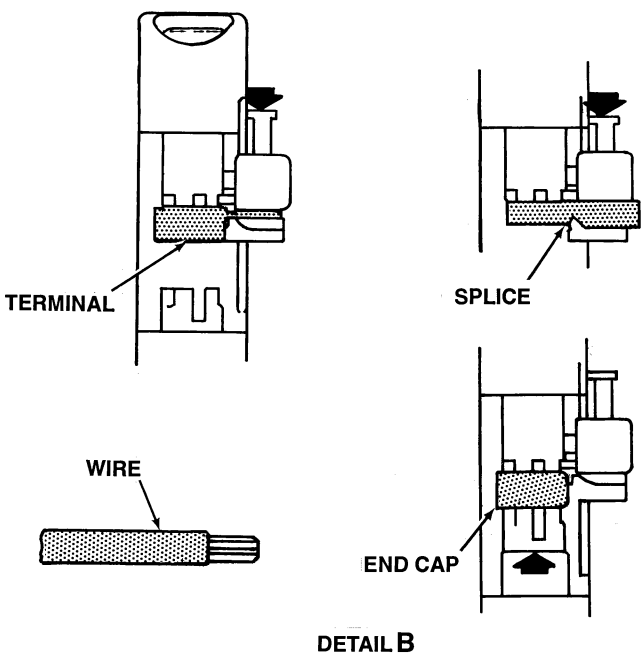

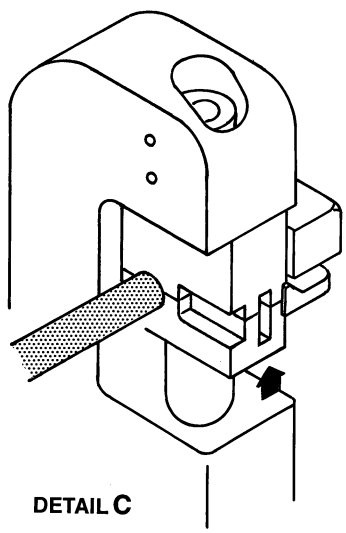

E/SPM-4-41-2

Figure 4-41. Crimp tools M22520/5-01 and /10-01 (Sheet 2)

4-10. SOLDERLESS SPLICES.

Electrical copper wire may be spliced using environmental or insulated splices. This paragraph provides the recommended procedures, tools and parts necessary to perform this operation.

1. RESTRICTIONS.

a. There shall be not more than one splice in any one wire segment between any two connectors or other disconnect points.

b. Splices in bundles must be staggered, and shall not increase size of bundle so as to prevent bundle from fitting into its designated place or cause congestion which will adversely affect maintenance. Refer to figure 4-42.

c. Splices shall not be used to salvage scrap lengths of wire.

d. Splices shall not be used within 12 inches of a termination device except as allowed in step e.

e. Splices may be used within 12 inches of a terminating device when attaching to pigtail spare lead of a connector, or to splice multiple wires to a single wire, or to adjust wire sizes so that they are compatible with contact crimp barrel sizes.

2. ENVIRONMENTAL RESISTANT SPLICES. Environmental resistant splices are permanent splices having a heat shrinkable insulating sleeve and meltable environmental seals to protect the splice against corrosion, degradation over time, and harsh environments.

3. CRIMPING PROCEDURES.

a. Select the correct environmental splice, crimp tool, and die from table 4-19.

NOTE

Gaging is done with the tool in the fully closed position. Refer to crimp tool manufacture manual for gaging procedures.

b. Check crimp tool with applicable gage from table 4-19. Return tools which are out of tolerance for repair.

c. Strip 5/16 to 11/32 inch of insulation from wires. Ensure a gap of 1/32 to 1/16 inch exists between wire insulation and crimp barrel.

d. Position splice crimp barrel in applicable die of the M22520/5-01 or M22520/10-01 crimp tool, so that one end of crimp barrel butts against crimp locator. Lock in place by partially closing handles without denting crimp barrel.

e. Insert wire fully into crimp barrel and crimp by closing handles until ratchet releases.

f. Before completing the splice, slide the sealing sleeve back over one of the wires.

g. Reverse the position of crimp barrel in crimp tool die. The attached wire will extend through slot in crimp locator.

h. Lock crimp barrel in place by partially closing handles without denting crimp barrel.

i. Insert wire fully into crimp barrel and crimp by closing handles until ratchet releases.

WARNING

DO NOT USE HEAT GUNS WITH ELECTRIC MOTORS WHEN WORKING ON HELICOPTERS THAT HAVE NOT BEEN DEFUELED AND PURGED FOR EXTENSIVE MAINTENANCE.

j. Slide sealing sleeve over crimp barrel, center it, and shrink with hot air heater (HT-900). Heat the middle first to lock sleeve in place; then heat ends until sealing rings melt and ooze out around wire. To ensure a good seal, allow splice to cool before handling.

4. PRE-INSULATED SPLICES. Pre-insulated permanent copper splices are used to join small copper wires, sizes 26 through 10. Each splice size can be used for more than one wire size. Splices are color coded in the same manner as pre-insulated small copper terminal lugs.

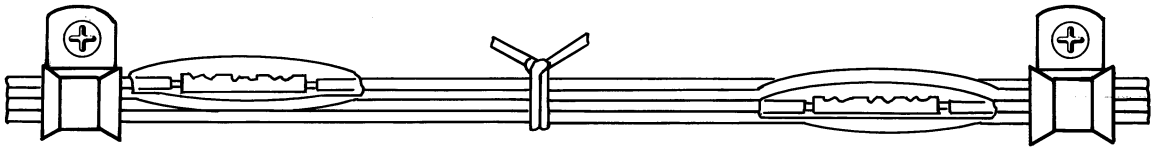

E/SPM-4-42

Figure 4-42. Staggered splices in wire bundle

Table 4-19. Environmental splices and associated crimp tools

Color Code	Splice Part No.	Wire Sizes	Dies		Gauge
			M22520/5-01 Tool	M22520/10-01 Tool	
Red	M81824/1-1	26 – 20	M22520/5-103	M22520/10-104	M22520/3-14
Blue	M81824/1-2	20 – 16	M22520/5-103	M22520/10-104	M22520/3-13
Yellow	M81824/1-3	16 – 12	M22520/5-102	M22520/10-103	M22520/3-12

NOTE: Raychem AD-1377 crimp tool may also be used. See figure 4-44.

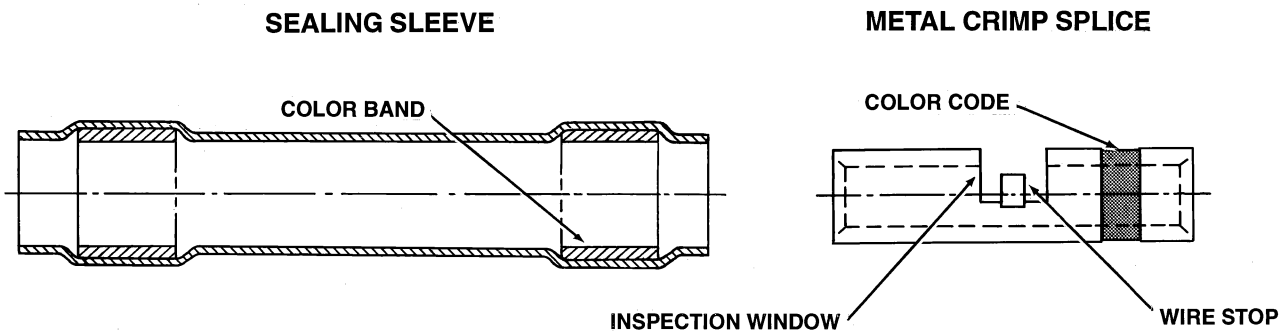

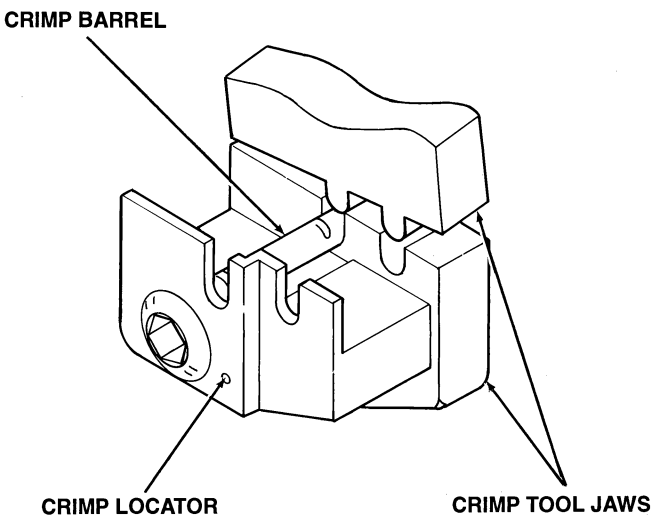

E/SPM-4-43

Figure 4-43. Locating sealed splice crimp barrel in crimping dies

5. CRIMPING PROCEDURE. Crimp pre-insulated copper splices in the 26 to 14 wire size range with the MS90413 tool and the 12 and 10 wire sizes with the MS3316 tool as follows:

NOTE

Pre-insulated splices may be crimped with the M22520/5 or /10 tool as described previously.

a. Check tool for correct adjustment. Tools out of adjustment must be returned to the manufacturer for repairs.

b. Strip wire to length given in table 4-20.

c. For the MS90413 tool, with tool handles fully open, set wire size selector knob to the proper position for wire size being crimped. Slide terminal lug locator down below die surface into fully retracted position. Refer to figure 4-45. For the MS25181 splice, slide the MS90413-2 splice locator back into retracted position, and insert splice into tool so that the locating shoulder on side of splice to be crimped is in the space between the two crimping dies and insulation barrel on this side of splice protrudes from wire side of tool.

For the M7928/3 splice, slide the MS90413-2 locator back into retracted position, and insert the splice into the stationary die so that the MS90413-2 locator finger fits into the locator groove in the splice, and the insulation barrel on the side of the splice to be crimped protrudes from the wire side of the tool.

Table 4-20. Stripping lengths — splices

Wire Size	Stripping Length (Inches)
26 – 24	5/32
22 – 14	7/32
12 – 10	5/16

d. For the MS3316 tool, one locator is used for both terminal lugs and M7928/3 splices. For MS25181 splice, insert splice into the tool so that locating shoulder on the side of splice to be crimped is in the space between the two crimping dies. The insulation barrel on this side of the splice protrudes from wire side of the tool. For M7928/3 splice, insert splice into the movable die so that locator on the tool fits into the groove in the splice. The insulation barrel on the side of the splice to be crimped protrudes from wire side of the tool.

e. Squeeze tool handles slowly until tool jaws hold splice barrel firmly in place, but without denting the barrel.

f. Insert stripped wire into splice barrel which protrudes from wire side of splice until stripped end of wire butts against the stop in the center of the splice. This can be seen through the splice inspection window.

g. Crimp by closing tool handles. Tool will not open until the full crimping cycle has been completed.

h. After crimping, check that wire end is still visible through the inspection window.

i. Reverse position of splice in crimping tool (or location of crimping tool on splice) and repeat steps b. through h. to crimp wire into other side of splice.

4-11. CONNECTOR POTTING.

1. GENERAL. Sealing compound is used to moisture proof and reinforce the wiring, connected to the backs of electrical connectors, against failure caused by vibration and lateral pressure which fatigue the wire at the solder cup. The sealing compound protects electric connectors from corrosion, contamination, and arcing by excluding moisture, metallic particles, and helicopter liquids. This section describes the MIL-S-8516C (EC-067) potting compound used on helicopter electric connectors, and gives instruction for preparing and storing the compound.

2. DESCRIPTION. Sealing compound in accordance with military specification MIL-S-8516A is a two-part polysulfide synthetic rubber compound, consisting of a base and an accelerator (curing agent), packaged together. This compound is used to seal connectors located in areas where the ambient temperature does not exceed 185°F (85°C). MIL-S-23586 silicone rubber compound is used to seal connectors located in areas where the ambient temperature is 185 to 448°F (85 to 232°C). MIL-24041 potting compound is resistant to fuel and oil and can be used in areas where the ambient temperature is up to 258°F (125°C).

3. GENERAL PRECAUTIONS. Potting compound as received from the manufacturer is a two-part kit. The containers must not be separated until used. The kits are properly weighed and require no further weighing when mixing at least one kit at a time. Follow the manufacturer's instructions carefully when mixing the base compound and accelerator if both are in separate containers. Substitution, partial mixing, or use of incorrect proportions of compound and accelerator may produce a sealant with inferior properties.

a. Make sure that the entire amount of accelerator is mixed into the entire amount of base. Any change in catalyst ratio will effect properties of the sealant and may also affect pot life, reversion resistance, and hardness of the cured compound. Do not mix base compounds with accelerator components of different batch numbers because substandard electrical properties may result.

b. Small quantities of mix (less than 1 kit) must be mixed 100 parts (by weight) of base materials to 12 parts (by weight) of accelerator.

WARNING

SEALANT CONTAINS SMALL QUANTITIES OF FLAMMABLE SOLVENTS AND RELEASES FLAMMABLE BYPRODUCTS DURING MIXING AND CURING. OBSERVE ADEQUATE VENTILATION AND FIRE PROTECTION DURING MIXING AND/OR CURING.

4. PREPARATION OF PARTS.

a. The surface of the connectors to be protected with sealer must be free from oil, grease, dirt, etc. Clean thoroughly with aliphatic naphtha (EC-028). Clean surfaces by wiping dry with a clean, lint-free cotton cloth.

b. Apply to cleaned area a mixture of equal parts (by volume) of primer (EC-064) and Tetrahydrofuran (EC-065).

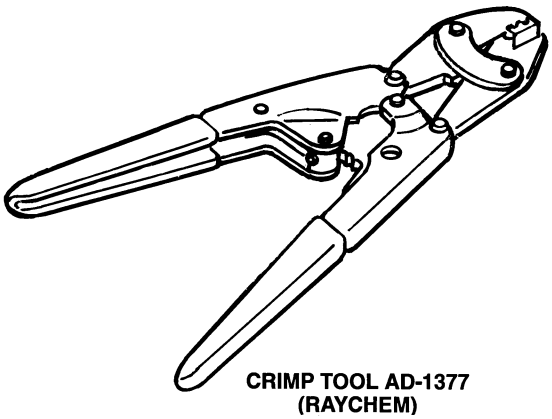

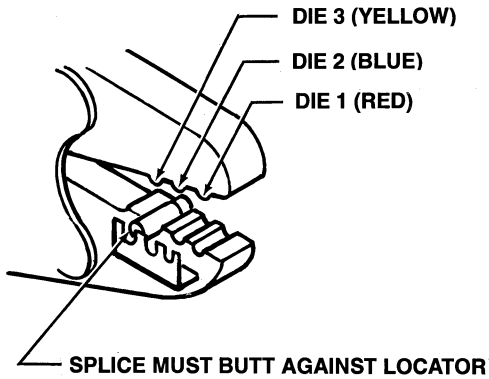

SPLICES	RAYCHEM PART NO.	COLOR CODE
	D-436-36	RED
	D-436-37	BLUE
	D-436-38	YELLOW
	D-436-42	BLUE
	D-436-43	YELLOW
	D-436-26	NONE

E/SPM-4-44

Figure 4-44. RayChem environmental butt splices

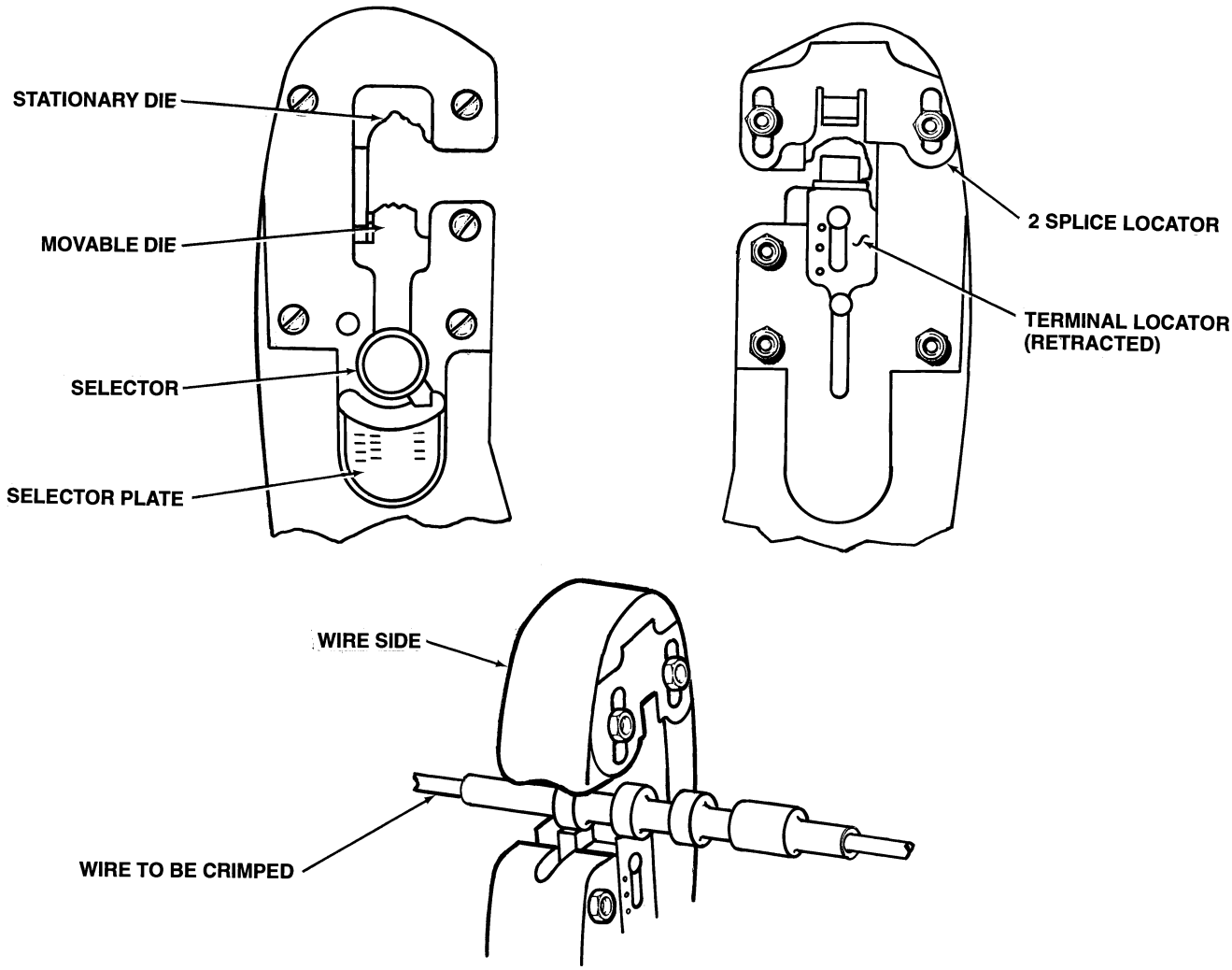

TERMINAL LUG LOCATOR RETRACTED FOR IN-LINE SPLICES
MS25181

E/SPM-4-45

Figure 4-45. Locating MS25181 splice in MS90413-2 crimping tool

5. PREPARATION OF SEALANT.

Equipment and Materials Required

Equipment

1. Automatic mixer
2. Pressure gun and accessories

   Pyles No. 950 with various cartridges and tips or Senco No. 250 with various cartridges and tips.
3. Freezer capable of maintaining a temperature of –30°F (–34.4°C)
4. Heat gun that provides heat of up to 120°F (45.9°C)
5. Centrifuge capable of operating at 2000 RPM

Material

1. Aliphatic Naphtha (EC-028)
2. Methyl-Ethyl-Ketone (MEK) (EC-081)
3. Strippable plastic coating compound (Hot dipping) (EC-062)
4. MIL-S-8516 (Potting Compound) (EC-067)

To prepare sealant proceed as follows:

WARNING

THE ACCELERATOR CONTAINS TOXIC COMPOUNDS. WEAR RUBBER OR POLYETHYLENE GLOVES TO AVOID SKIN CONTACT, AND CLEAN HANDS THOROUGHLY IF MATERIALS CONTACT SKIN.

a. Slowly stir accelerator to a smooth, creamy paste.

b. Agitate the sealer (MIL-S-8516) for at least two minutes by hand stirring. Refer to figure 4-46.

c. Weigh out the desired amount of sealer.

d. Weigh out 12 parts of accelerator for each 100 parts of sealer used.

e. Add the required quantity of accelerator to the base material and thoroughly agitate until no accelerator streaks or traces of unmixed sealer are visible. This usually requires approximately five minutes. The sealer must assume a uniform pink or tan color.

f. To ensure that material is adequately mixed, spread a thin film on white paper and examine closely for accelerator or sealer streaks.

g. The working life of the accelerated sealer is approximately 90 minutes at 36 to 75°F (24 to 27°C). Longer working life may be obtained by cooling the sealer to 5 to 60°F (5 to 15.5°C) just prior to addition of accelerator.

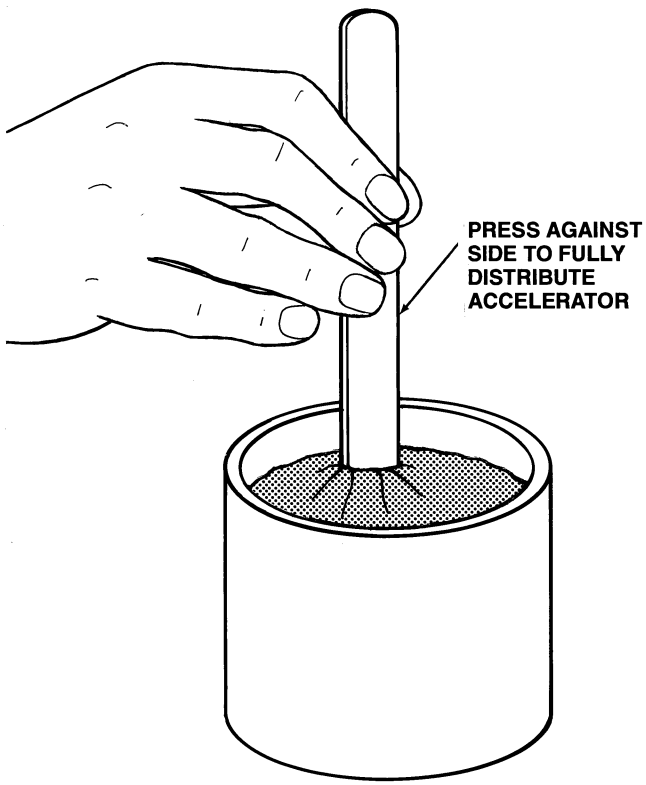

Figure 4-46. Hand mixing potting compound

h. The accelerated sealer may also be stored, for periods of from 24 to 36 hours, by cooling quickly immediately after acceleration and keeping at a temperature of –20°F (–29°C).

i. After storing at low temperature, the accelerated sealer may be thawed out by blowing compressed air on the outside of the container. Do not raise the temperature of the sealer by heating or by blowing air into the container.

j. If the mixed compound is not to be used immediately, store it as directed in paragraph 7.

k. Sealants having an application time of one hour or less shall be hand mixed on the job.

6. MECHANICAL MIXING PROCEDURE. Mechanical mixing should be done at 60°F (15°C) or lower to prolong the working life of the sealant. The procedure is as follows:

a. Hand mix the accelerator, or use paint shaker vibrating machine if available. Shake for five to seven minutes.

b. If the base material is packaged in a metal can, cut off the top of the container using a mechanical can opener. This should leave a smooth wall without any burr at the top of the can.

c. Clamp base material container securely to drill press geared to 50 RPM minimum to 90 RPM maximum. Insert a mixing paddle fashioned from a drill rod and wire. Refer to **figure 4-47.**

d. Start drill press motor and slowly lower mixing paddle into the base compound to combine any material which may settle out.

e. Scrape all accelerator from its container and place it in the base material. Start drill press motor again and mix slowly for approximately two minutes. Stop machine, raise paddle, and scrape container walls as clean as possible. Start the drill press and lower the mixing paddle again and continue mixing for an additional three minutes.

f. Make thin spread of sealant on white paper as described in paragraph 5. If necessary, continue mixing in two-minute cycles followed by paper test until no traces of unmixed material are visible. The sealant is then ready for use.

g. If the mixed compound is not to be used at once, store in accordance with instructions in paragraph 8.

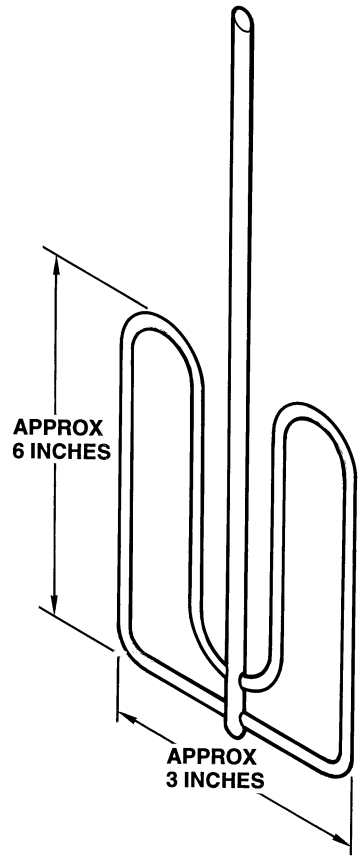

E/SPM-4-47

Figure 4-47. Mixing paddle for potting compound

7. STORAGE OF UNMIXED SEALING COMPOUND. Store base compound and accelerator in a cool place, preferably under refrigeration. Shelf life for MIL-S-8516 and MIL-S-23586 compounds is approximately six months when stored below 73°F (23°C) and can be extended to one year when stored at 45°F (7°C) or below.

CAUTION

DO NOT STORE SEALING COMPOUND AT TEMPERATURES ABOVE 26°C. KEEP BASE COMPOUND AND ACCELERATOR TOGETHER IN THE CARTON AS FURNISHED. NOTE MANUFACTURING DATE STAMPED ON CARTON AND USE OLDEST MATERIAL FIRST.

CAUTION

DO NOT USE SEALING COMPOUND WHICH HAS EXCEEDED NORMAL SHELF LIFE UNLESS IT HAS BEEN TESTED BY AN APPROPRIATE LABORATORY TO EVALUATE ITS ACCEPTABILITY FOR FURTHER USE.

8. STORAGE OF MIXED SEALING COMPOUND. Mixed MIL-S-8516 potting compound can be stored in cartridge tubes for periods of 30 to 60 days provided the filled tubes are quick-frozen immediately after mixing and are stored at –40°F (–40°C). Quick-freezing of the filled tubes is done by immersing for five minutes in O-T-620 trichloroethane cooled with solid BB-C-104 carbon dioxide to temperatures below –49°F (–45°C). Freezing by slow cooling air is not recommended since it reduces the mixed storage life. Mixed MIL-S-23586 potting compounds, usually have shorter storage life than MIL-S-8516 compounds after quick freezing. The storage life of quick-frozen MIL-S-23586 potting compounds is usually less than three weeks at –40°F (–40°C). In general, extended storage of mixed, frozen potting compound shortens pot life and cure time after thawing. The method to determine whether the frozen compound is suitable for use is to thaw the material. If it is still pourable and has sufficient pot life remaining for application purposes it can be considered satisfactory. Mixed compound in tubes should not be stored in dry ice since the material will absorb carbon dioxide and cause sponging or porosity.

9. APPLICATION OF SEALER. Apply the properly mixed, accelerated sealer to the connector shell with a spatula, putty knife or flow gun. A flow tip small enough to reach soldered wire connections at base of plug is recommended. Apply the accelerated sealer so that no large entrapped air bubbles remain which result in loss of strength and electrical properties. The sealing of the connectors must protect the electrical wiring connections completely, as shown in figure 4-48.

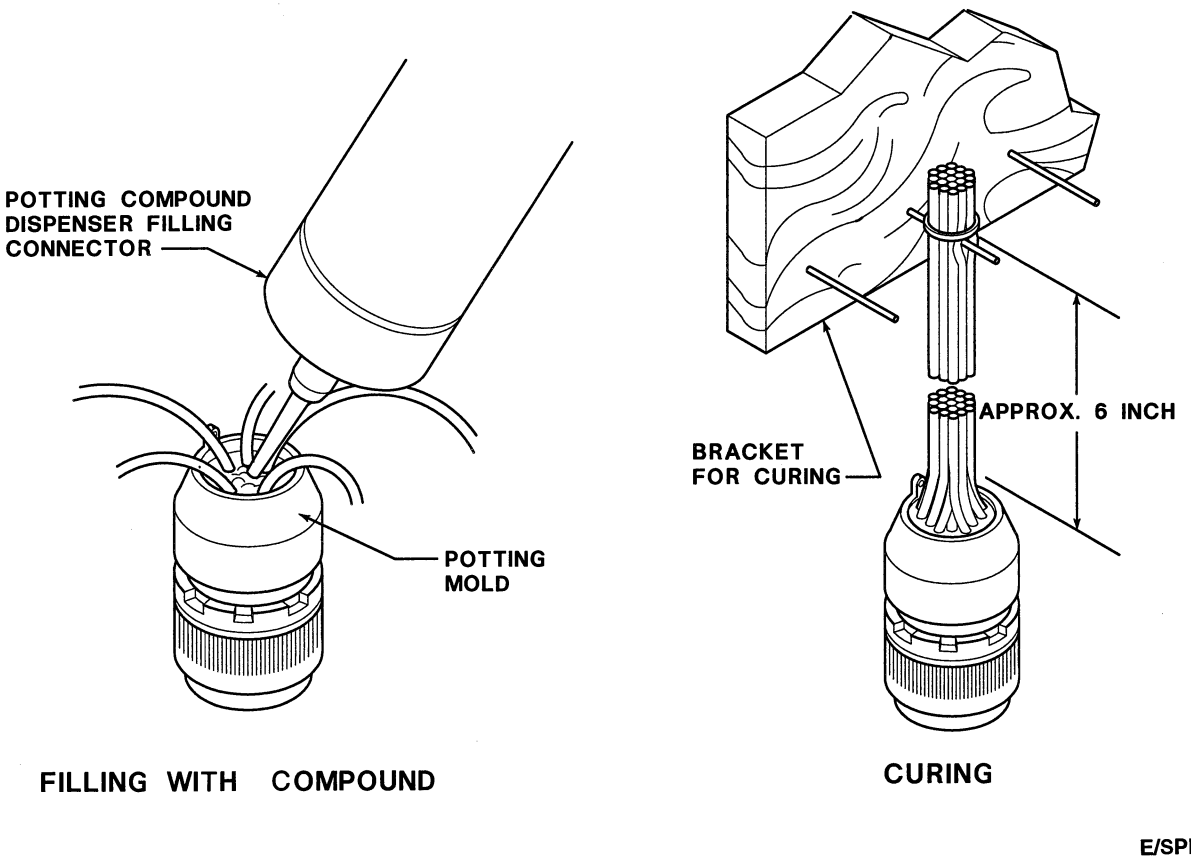

Figure 4-48. Filling and curing of potting

10. CURING OF SEALER.

a. Cure the accelerated sealer for at least 24 hours at (22 to 27°C) before the connectors are installed in the electrical system. The curing time will be shortened if temperatures are higher and will be lengthened if temperatures are lower.

NOTE

Remove excess sealer from equipment before it cures, using toluene TT-T548.

b. When a finish, such as primer or lacquer, has been removed during stripping, refinish the area around the new sealant with the same finish as was used originally.

11. REMOVAL OF SEALANT.

WARNING

TO PREVENT INJURY TO HANDS, HEAVY RUBBER GLOVES MUST BE WORN DURING THE FOLLOWING PROCEDURES.

a. Cut away as much sealant as possible around the repair area, using a sharp micarta scraper. Do not use a tool made of metal.

b. Mask off the area surrounding the scraped sealant with fabric-backed masking tape, (EC-049) and similarly mask any areas where the ensuing application of stripper may splash or drip.

c. Apply stripper (EC-047) to the scraped sealant as heavily as possible without running or dripping. A micarta scraper pushed under the sealant will accelerate the action of the stripper. Wipe off immediately any stripper that falls accidentally on unmasked surrounding areas with a clean dry cloth, and mark its position for cleaning later, refer to **paragraph 4-11,** step 12.

d. At 10 minute intervals, remove the stripper and any loosened sealant with micarta scraper, and apply a fresh quantity of stripper. Do not allow the stripper to dry out on the sealer. Repeat this cycle of operations until all the sealant has been removed. If there is any finish, such as primer or lacquer, under the sealant, continue stripping to bare metal.

e. Remove all masking tape.

f. Roughen all surfaces of the original sealant adjacent to the stripped area over at least one inch of their length, using a micarta scraper or clean hardwood. Take care not to scratch the surrounding metal surfaces.

12. CLEANING PRIOR TO RESEALING.

WARNING

TO PREVENT INJURY TO SKIN, HEAVY RUBBER GLOVES MUST BE WORN.

a. Remove all dirt and foreign matter which may have accumulated during stripping operations and other structural repairs.

b. Scrub the stripped area and surroundings with a clean cloth dampened with methylene chloride MIL-M-6998 (EC-027). Apply the cloth to only a small area at a time and change the cloth frequently.

c. Wipe the area thoroughly with a clean cloth dampened with butyl acetate (EC-082). Apply the cloth to only a small area at a time, and wipe off with a clean dry cloth before the butyl acetate dries. Change both cloths frequently.

d. Wipe the whole area under repair with a clean dry cloth.

13. PREPARATION OF CONNECTORS.

a. MS3100, 3106, and 3108 connectors – Assemble the back shell to the connector. Build up the back shell, if necessary, with the cellophane tape (EC-068) to a depth of at least 0.25 inch past the solder pots.

b. MS3102 connectors – All MS3102 connectors shall have a fitting sleeve of cellophane tape over the back barrel before potting. Tape sleeve shall be sufficient height to allow potting to a depth of at least 0.25 inch past the solder pots. Remove tape after potting has cured.

c. Other connectors – MS3103, 3110, 3112, 3114, 3116, and 25183 connectors are supplied with separate plastic polyethylene molds. They shall be used in accordance with manufacturer's instructions.

14. PREPARATION OF UNETCHED TEFLON WIRE.

WARNING

ETCHANT SOLUTION (EC-063) IS FLAMMABLE AND MUST NOT BE EXPOSED TO OPEN FLAME. RUBBER GLOVES AND SAFETY GOGGLES MUST BE WORN. ANY ETCHING SOLUTION SPILLED ON SKIN MUST BE IMMEDIATELY FLUSHED OFF WITH RUNNING WATER. ETCHANT IS TOXIC IF TAKEN INTERNALLY, DUE TO CAUSTIC SODA FORMED ON REACTION WITH MOISTURE. IF ACCIDENTALLY SWALLOWED, DRINK MILK OR WATER. DO NOT INDUCE VOMITING. OBTAIN IMMEDIATE MEDICAL SERVICE.

a. Before potting, teflon wires not pre-etched shall be treated as follows:

(1) Roughen (very lightly) the area to be etched using 600 grit sandpaper or Scotchbrite (EC-092). Do not sand through braids on outer insulation.

(2) Clean roughened area with aliphatic naphtha (EC-028), MEK (EC-081). Wipe dry before solvent evaporates.

CAUTION

THE ETCHANT CONTAINS INGREDIENTS THAT ARE HARMFUL TO METAL COMPONENTS. THEREFORE CARE MUST BE TAKEN TO ENSURE ETCHANT DOES NOT COME IN CONTACT WITH WIRE, SOLDER, SOLDER PIN, OR CONNECTOR. ANY ETCHANT SPILLED ON CONNECTOR MUST BE IMMEDIATELY WIPED OFF USING A CLEAN CLOTH SATURATED WITH NAPHTHA (EC-028), OR MEK (EC-081).

b. Dip wire connecter end into (hot dipping) strippable plastic coating compound (EC-062) deep enough to encapsulate solder pin, solder, and bare wire.

c. Dip, pour, or swab the etchant (EC-063) onto the area required for potting. This area shall not exceed 0.25 inch from end of insulation to a minimum of 0.75 inch and a maximum of 1.5 inch onto insulation.

d. Allow the etchant to remain on the wire insulation until the insulation becomes dark (normally 15 seconds to 1 minute).

e. Using a clean cloth saturated with naphtha or MEK clean etched area.

f. Peel strippable plastic coating compound from connector pin end of wire.

g. Place unused etchant in suitable container fro disposal.

15. APPLICATION OF POTTING COMPOUND. Potted-type connectors differ from the standard type by having a shorter body shell. The potting compound is to be applied as follows:

WARNING

SEALANT CONTAINS SMALL QUANTITIES OF FLAMMABLE SOLVENTS AND RELEASES FLAMMABLE BYPRODUCTS DURING MIXING AND CURING. OBSERVE ADEQUATE VENTILATION AND FIRE PROTECTION DURING MIXING AND/OR CURING.

NOTE

Complete potting within two hours after cleaning.

a. Slide the plastic mold over the wire bundle if applicable or ensure tape sleeve is in place.

b. Ensure all wires are soldered or crimped to connector pins and all connector pins are inserted in connector.

CAUTION

POLYTETRAFLUORETHYLENE (TFE) AND FLUORINATED ETHYLENE PROPYLENE (FEP) INSULATED WIRES REQUIRE SPECIAL PREPARATION PRIOR TO POTTING. REFER TO PARAGRAPH 4-11, STEP 14.

c. Install spare wires on all unused pins. Use the largest gage wire that would normally be attached to each contact. Spare wires are approximately 9 inches long.

d. Insulate spare wires using MS25274 end caps. Refer to table 4-21 to determine end cap part number.

e. Clean the complete connector assembly by scraping off rosin and then brush vigorously in new unused trichloroethane.

f. Insert potting gun nozzle between center wires so that sealant will flow around contacts.

g. Maintain tip of nozzle slightly below swell of material level while moving the nozzle up as connector fills.

h. To prevent air entrapment, pat down compound, if necessary, with a 1 inch dowel. Tap connector assembly on a resilient surface or vibrant mechanically to help flow compound into all spaces and to release trapped air.

i. Immediately after filling connector, tie wires together loosely about 6 in. from the connector. Make sure that wires are centrally located in the connector so that each wire is completely surrounded by potting compound. Suspend the assembly so that the potting material remains level, as shown in figure 4-48 and allow to air cure for at least 1 1/2 hours at 75°F (24°C) without any movement. Make sure that the tie is applied after potting.

Table 4-21. Wire end caps

MS NUMBER	COLOR	WIRE SIZE
M25274-1	Yellow	26 – 24
M25274-1	Red	22 – 18
M25274-1	Blue	16 – 14
M25274-1	Yellow	12 – 10

WARNING

THE ACCELERATOR CONTAINS A TOXIC LEAD COMPOUND. AVOID EXCESSIVE SKIN CONTACT. CLEAN HANDS THOROUGHLY AFTER USING. WEAR GLOVES.

WARNING

SEALANT CONTAINS SMALL QUANTITIES OF FLAMMABLE SOLVENTS AND RELEASES FLAMMABLE BYPRODUCTS DURING MIXING AND CURING. OBSERVE ADEQUATE VENTILATION AND FIRE PROTECTION DURING MIXING AND/OR CURING.

j. Carefully place assembly, still suspended, into a drying oven for 3 to 4 hours at 100 °F (38°C), or air cure at 75°F (24°C) for 24 hours.

NOTE

Full cure with maximum electrical characteristics is not achieved until 24 hours after potting. Do not perform electrical insulation resistance tests until this period has passed.

4-12. SEMICONDUCTOR MAINTENANCE.

In solid state circuits the impedance's and resistance's encountered are of much lower values than those encountered in earlier state of the arts circuitry. Therefore, when measuring values of capacitors an instrument accurate in the high ranges must be employed. Capacitor polarity must be observed when measuring resistance. Usually more accurate measurements can be obtained if the semiconductor are removed from the circuit.

1. SEMICONDUCTOR TEST EQUIPMENT. Damage to semiconductors by test equipment is usually the result of accidentally applying too much current or voltage to the elements. Common causes of damage from test equipment are discussed in the following paragraph.

a. Test equipment with transformerless power supplies is one source of high current. However, this type of test equipment can be used by employing an isolation transformer in the AC power line.

b. It is possible to damage semiconductors from line current, even though the test equipment has a power transformer in the power supply, if the test equipment is provided with a line filter. This filter may function as a voltage divider and apply half voltage to the semiconductor. To eliminate this condition, connect a ground wire from the test equipment chassis to the chassis of the equipment under test before making any other connections.

c. Another cause of semiconductors damage is a multimeter that requires excessive current to provide adequate indications. Multimeters with sensitivities of less than 20,000 ohms-per-volt should not be used on semiconductors as they could cause damage. If more than one milliampere is drawn on any range, this range can not be safely used on small semiconductors.

d. When using a battery-type power supply, always use fresh batteries of the proper value. Make certain that the polarity of the power supply is correct for the equipment under test. Do not use power supplies having poor voltage regulation

2. TRANSISTOR TESTING. A transistor checker should be used to properly evaluate transistors. If a transistor tester is not available, a good multimeter may be used. Make sure that the multimeter meets the requirements outlined in the preceding paragraph.

a. To check a PNP transistor, connect the positive lead of the multimeter to the base of the transistor and the negative lead to the emitter. Generally, a resistance reading of 50,000 ohms or more should be obtained. Reconnect the multimeter with the negative lead to the base. With positive lead connected to the emitter or collector a resistance value of 500 ohms or less should be obtained.

b. Similar tests can be made on an NPN transistor. With the negative lead of the multimeter connected to the base of the transistor the value of resistance between the base and the collector or emitter should be high. With the positive lead of the multimeter connected to the base, the value of resistance between the collector or emitter should be low. If these results are not obtained, the transistor is probably defective and should be replaced.

CAUTION

IF A TRANSISTOR IS FOUND TO BE DEFECTIVE, MAKE CERTAIN THAT THE CIRCUIT IS IN GOOD OPERATING ORDER BEFORE INSTALLING A REPLACEMENT TRANSISTOR. IF A SHORT CIRCUIT EXISTS IN THE CIRCUIT, PUTTING IN ANOTHER TRANSISTOR WILL MOST LIKELY RESULT IN BURNING OUT THE NEW COMPONENT. DO NOT DEPEND UPON FUSES TO PROTECT TRANSISTORS.

c. Always check the value of the bias resistors in series with the various elements. A transistor is very sensitive to improper bias voltage; therefore, a short or open circuit in the bias resistance may damage the transistor.

3. REPLACING SEMICONDUCTORS. Never remove or replace a semiconductor with a supply voltage turned on. Transients thus produced may damage the semiconductor or others remaining in the circuit. If a semiconductor is to be evaluated in an external test circuit, be sure that no more voltage is applied to the semiconductor than normally is used in the circuit from which it came.

a. Use only a low heat soldering iron when installing or removing soldered-in parts.

b. When installing or removing a soldered-in semiconductor grasp the lead to which heat is applied between solder joint and the semiconductor with long-nosed pliers. This will dissipate some of the heat that would otherwise conduct into the semiconductor from the soldering iron. Make certain that all wires soldered to semiconductor terminals have first been properly tinned so that the necessary connection can be made quickly. Excessive heat will permanently damage a semiconductor.

c. In some cases, power transistors are mounted on heat sinks that are designed to dissipate heat away from them. In some power circuits, the transistor must also be insulated from the ground. This insulating is accomplished by means of an insulating washer made of mica. When replacing transistors mounted in this manner, be sure that the insulating washers are replaced in proper order. After the transistor is mounted, and before making any connections, check from the case of the transistor to ground with a multimeter to see that the insulation is effective.