TECHNICAL BULLETIN

ENGINE AUTOMATIC RE–IGNITION MODIFICATION

1. PLANNING INFORMATION

A. Aircraft Affected:

All Model 369H/HE/HM/HS/D series helicopters with engine automatic re–ignition kit installed.

B. Assembly/Components Affected By This Bulletin:

369H90118 engine automatic re–ignition kit.

C. Reason:

To disconnect a defective switch in the XDS9 assembly from the system because replacement switches are not available. Also to change the manual reset function of the XDS9 engine automatic re–ignition (**RE-IGN**) indicator light to automatic reset after engine re–ignition.

D. Description:

This modification disconnects the wires from the switch in the XDS9 assembly from the system. The disconnected wires are then spliced together to make the XDS9 **RE-IGN** indicator light reset automatically after engine re–ignition.

E. FAA Approval

The technical design aspects of this Bulletin are FAA Approved.

F. Manpower:

Two man–hours.

G. Time of Compliance:

Customer option, at operator's discretion.

H. Interchangeability:

None

I. Points of Contact:

For further assistance, contact the Field Service Department at MDHI, Mesa, Arizona. Telephone 1–800–388–3378 or (480) 346–6387. DATAFAX: (480) 346–6813.

J. Material/Part Availability:

N/A

K. Warranty Policy:

N/A

L. Disposition of Parts Removed:

N/A

M. Tooling:

N/A

TECHNICAL BULLETIN

N. Weight and Balance

N/A

O. Electrical Load Data:

N/A

P. Other Publications Affected:

CSP-HE/HS-1 Rotorcraft Flight Manual, CSP-D-1 Rotorcraft Flight Manual, CSP-H-3 Optional Equipment Manual, and CSP-HMI-3 Handbook of Maintenance Instruction, Instruments - Electrical - Avionics.

2. ACCOMPLISHMENT INSTRUCTIONS

A. Preparation:

NOTE:

- Make sure you hear engine igniter when you do the operational test.
- If you do not hear engine igniter during the operational test, repair the defective auto re-ignition system before you do the modification.

(1). Before you do this modification, do an operational test of the engine automatic re-ignition system. Refer to the before engine start procedures of the applicable Rotorcraft Flight Manual.

B. Modification Instructions:

(Ref. Figure 1 and Figure 2)

NOTE: If it is necessary to disconnect wires for switch access, make sure you put a label on them. You must connect these wires when the modification is complete.

(1). 369H/HE/HM/HS helicopter, get access to the rear end of XDS9 light assembly (Ref. CSP-H-2 Basic Handbook of Maintenance Instructions and CSP-H-3 Optional Equipment Manual).

(2). 369D helicopter, get access to the rear end of XDS9 light assembly (Ref. CSP-HMI-3 Handbook of Maintenance Instruction, Instruments - Electrical - Avionics).

(3). Disconnect all wires from switch S2 Normally Open (NO) terminal.

(4). Disconnect all wires from switch S1 Normally Closed (NC) terminal.

(5). Splice the disconnected wires together, use a solder splice or solder and heat shrinkable sleeving.

(6). 369H/HE/HM/HS helicopter, install components removed for access to XDS9 light assembly (Ref. CSP-H-2 Basic Handbook of Maintenance Instructions and CSP-H-3 Optional Equipment Manual).

(7). 369D helicopter, install components removed for access to XDS9 light assembly (Ref. CSP-HMI-3 Handbook of Maintenance Instruction, Instruments - Electrical - Avionics).

(8). Remove, or apply black paint to, the **PRESS TO RESET** decal on the engine automatic re-ignition switch panel.

C. Ground Operational Test:

(1). Apply external electrical power to the helicopter.

(2). Make sure **ARMED** and **RE-IGN** lights come on when test switch is set to **TEST** or arm switch is set to **ARM**.

(3). Make sure you hear engine igniter.

(4). Make sure **RE-IGN** light goes off after you release the test or arm switch.

(5). Disconnect electrical power from helicopter.

D. Ground Operational Test With Engine In Operation:

(1). For early systems with the arm switch and torquemeter oil pressure switch, do the steps that follow:

(a). Start engine (Ref. applicable Rotorcraft Flight Manual).

(b). Set engine torque to approximately 40 psi.

(c). Set arm switch to **ARM**, make sure **ARMED** light comes on

(d). Decrease engine torque to below 25 psi, make sure **RE-IGN** light comes on.

(e). Increase engine torque to approximately 40 psi, make sure **RE-IGN** light goes off.

(f). Shut down engine (Ref. applicable Rotorcraft Flight Manual).

(2). For systems with the arm switch and Engine Power Out (EPO) box, do the steps that follow:

(a). Start engine (Ref. applicable Rotorcraft Flight Manual).

(b). Set arm switch to **ARM**, make sure the **ARMED** light comes on.

(c). Set N_2 above 98%, make sure the **RE-IGN** light is off.

(d). Decrease RPM to less than 98%, make sure the **RE-IGN** light comes on.

(e). Increase N_2 to 103%, make sure the **RE-IGN** light goes out.

(f). Shut down engine (Ref. applicable Rotorcraft Flight Manual).

(3). For later systems with the test switch, do the steps that follow:

(a). Start engine (Ref. applicable Rotorcraft Flight Manual).

(b). Make sure the **ARMED** comes on when there is transmission oil pressure.

(c). Set N_2 above 98%, make sure the **RE-IGN** light is off.

(d). Decrease RPM to less than 98%, make sure the **RE-IGN** light comes on.

(e). Increase N_2 to 103%, make sure the **RE-IGN** light goes out.

(f). Shut down engine (Ref. applicable Rotorcraft Flight Manual).

(4). Make a record in the Compliance Record section of the Rotorcraft Log Book that this technical bulletin has been completed.

TECHNICAL BULLETIN

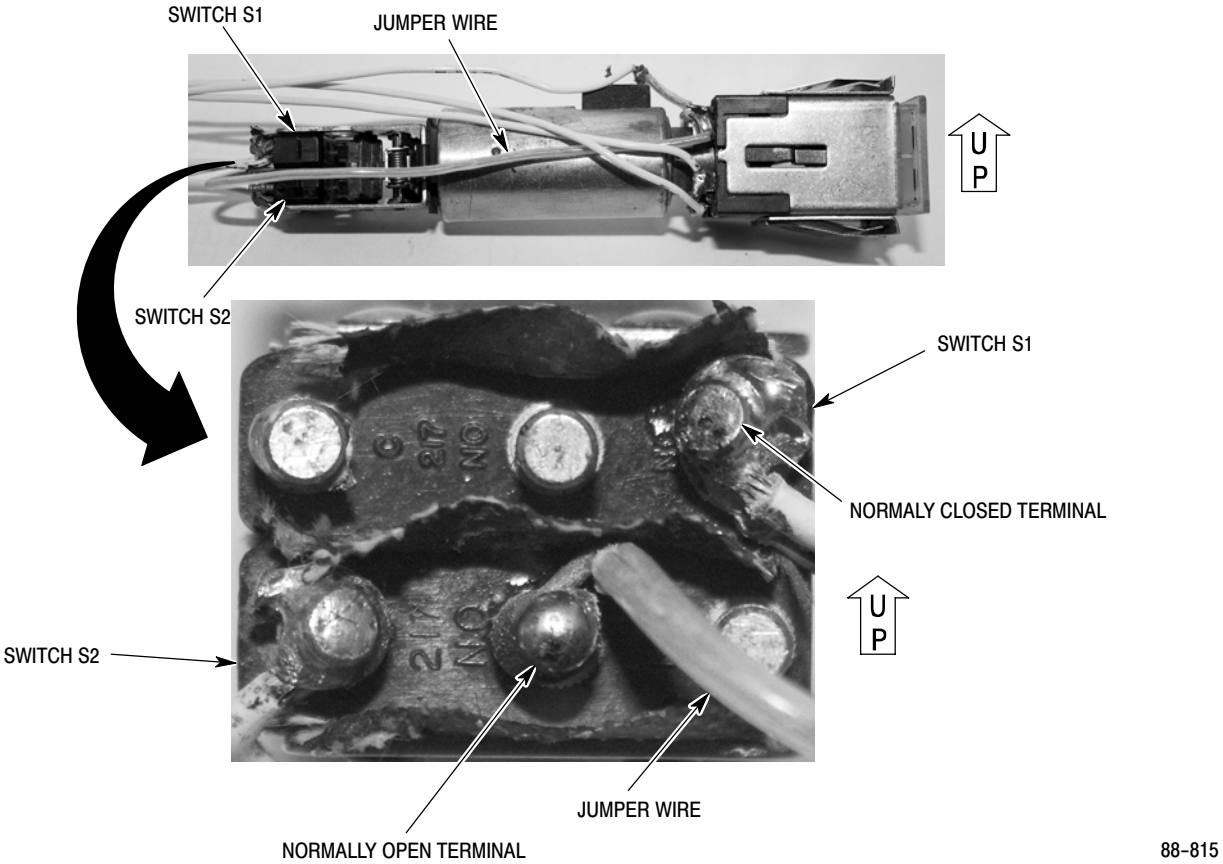

Figure 1. Engine Automatic Re-Ignition Indicator Light

TECHNICAL BULLETIN

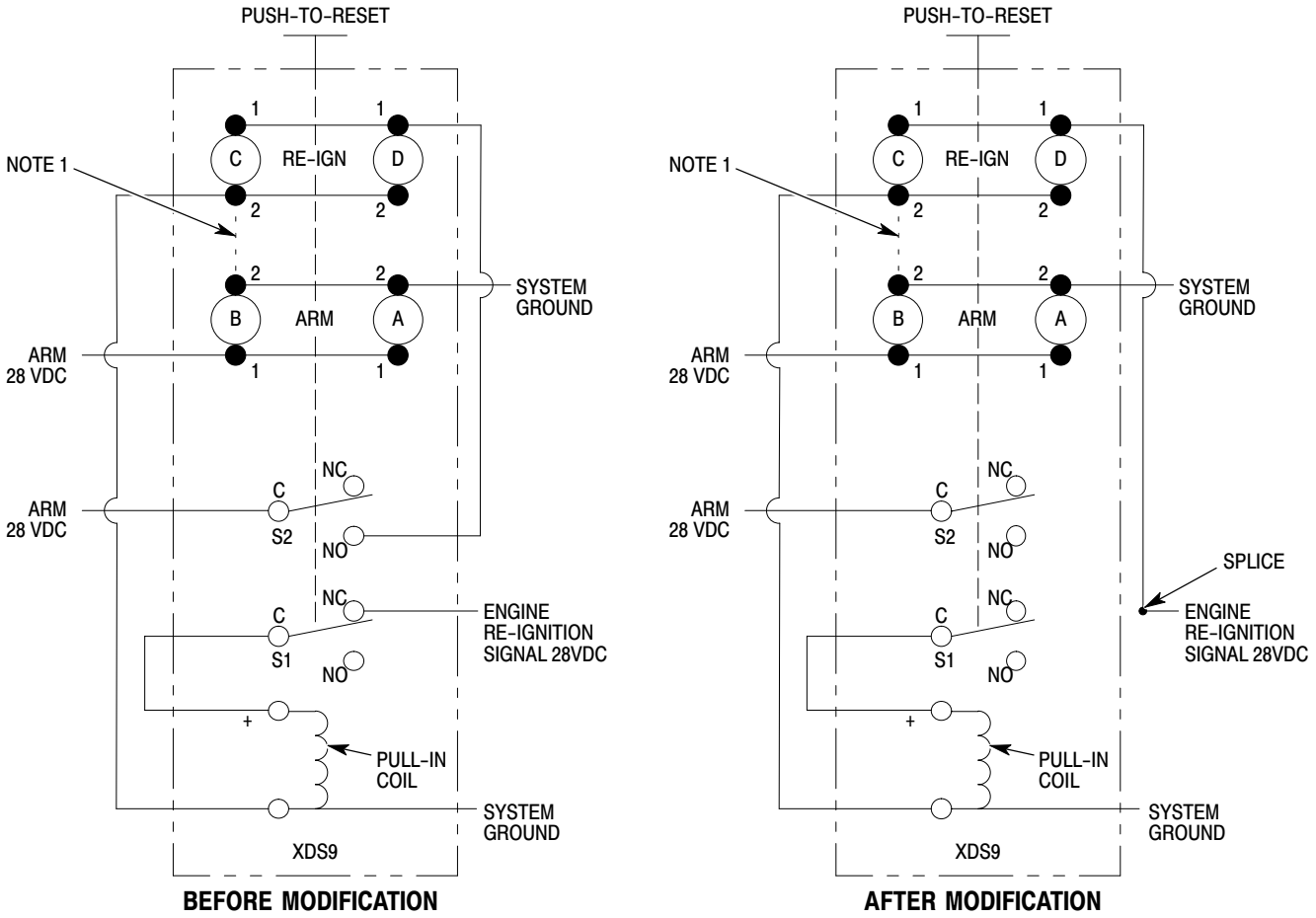

NOTES:
1. INSTALLED IN EARLY SYSTEMS. DO NOT CHANGE.
2. WIRE INDENTIFICATION IS DIFFERENT FOR DIFFERENT KITS, BUT INPUT AND OUTPUT SIGNAL FUNCTIONS STAY THE SAME.

88-814

Figure 2. XDS9 Switch Assembly Connection Modification

TECHNICAL BULLETIN

This page intentionally left blank!