Manual: CSP–HMI–2, Handbook of Maintenance Instructions
Models: 369D/E/FF – 500/600N Helicopters
Issued: 31 October 1990
Revision 38: 25 May 2006

FILING INSTRUCTIONS:

1. Before inserting this change, ensure the manual is current.
   Check the existing List of Effective Pages in the manual to ensure all prior revisions are inserted. **(Do not insert this revision if prior revisions are not inserted)**.
2. Incorporate this change by removing old pages and inserting new pages as indicated below.

Remove Pages	Insert Pages
Cover/Title	
Cover/Title	Cover/Title
TR	
1 and 2	1 and 2
List of Effective Pages	
TR 05-002	None
A thru J	A thru J
Contents	
iii and iv	iii and iv
Bulletins	
7 and 8	7 and 8
04-00-00	
1 thru 14	1 thru 14
Chapter 5	
i and ii	i and ii
05-00-00	
1 and 2	1 thru 4
05-20-10	
1 thru 4	1 thru 4
05-20-20	
5 and 6	5 and 6

Remove Pages	Insert Pages
Chapter 20	
i and ii	i and ii
20-10-00	
201 thru 205/(206 blank)	201 thru 206
20-90-00	
None	20-90-00 Cover
None	201 thru 204
Chapter 53	
i thru vi	i thru vi
53-30-00	
203 thru 215/(216 blank)	203 thru 214
67-10-00	
511 and 512	511 and 512
67-20-30	
405 thru 408	405 thru 408
71-10-10	
603 and 604	603 and 604
78-20-00	
201 thru 204	201 thru 204
78-30-00	
201 and 202	201 and 202

This Page Intentionally Left Blank

MDHI MODEL HELICOPTERS

MODELS 369D/E/FF - 500/600N

Basic Handbook of Maintenance Instructions

(CSP-HMI-2)

SERVICING AND MAINTENANCE

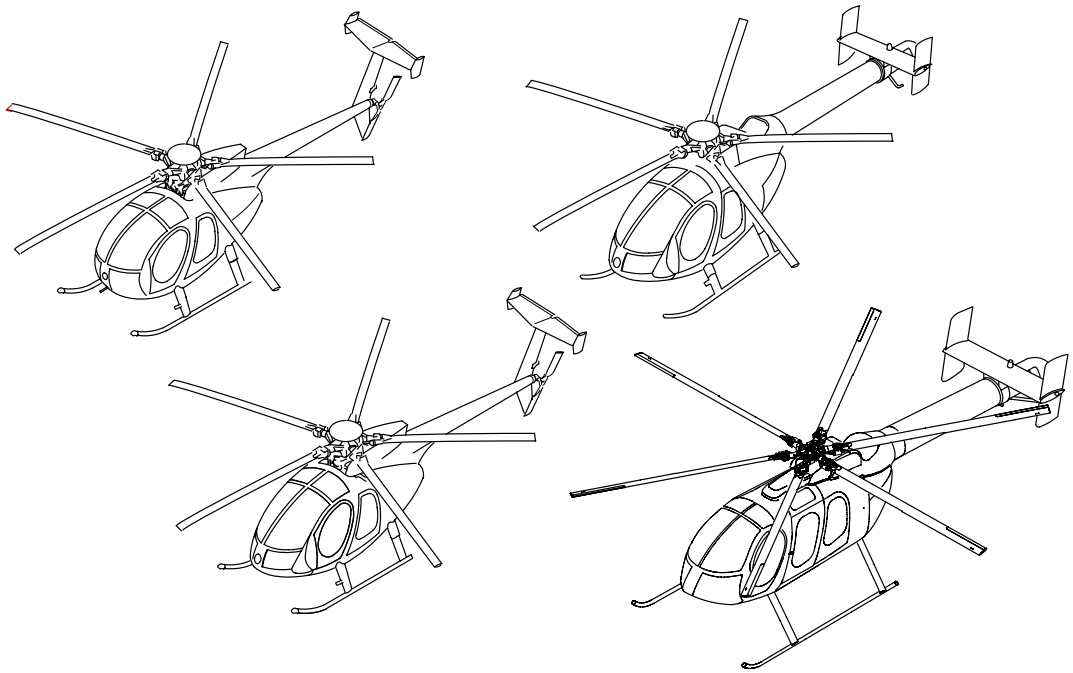

MD Helicopters, Inc.
4555 East McDowell Road
Mesa, Arizona 85215-9734

Copyright © 1999-2006 by MD Helicopters, Inc.
All rights reserved under the copyright laws.

Issued: 31 October 1990
Revision No. 38: 25 May 2006

PROPRIETARY RIGHTS NOTICE

The technical data and information contained in this publication is the property of and proprietary to MD Helicopters, Inc. and is not to be disclosed or reproduced in whole or in part without the written consent of MD Helicopters, Inc.

RESTRICTED USE

MDHI provides this manual for use by owners, operators and maintainers of MDHI products and authorized parts. Use by STC or PMA applicants or holders as documentation to support their certificates is not an authorized use of this manual and is prohibited. MDHI takes no responsibility for customer's use of parts manufactured under an STC or PMA when this manual is used as documentation with the Federal Aviation Administration to justify the STC or PMA. Use of unauthorized parts on MDHI products will void the MDHI warranty offered to the customer on components and may void the warranty on the helicopter.

MD Helicopters, Inc.
4555 East McDowell Road
Mesa, Arizona 85215-9734

MD HELICOPTERS INC.

RECORD OF TEMPORARY REVISIONS

MANUAL TITLE: CSP-HMI-2 MAINTENANCE MANUAL

REV. NO.	DATE INSERTED	BY	REMOVED BY INCORPORATING
91-001			Revision 3
91-002			Revision 4
92-001			Revision 5
92-002			
92-003			
92-004			
92-005			Revision 6
93-001			Revision 7
93-002			Revision 8
93-003			Revision 9
93-004			
93-005			
93-006			
94-001			
94-002			Revision 11
95-001			Revision 12
95-002			Revision 13
95-003			
96-001			
96-002			
97-001			Revision 18
97-002			
98-001			Revision 20
98-002			Revision 21
98-003			
98-004			Revision 22
98-005			
99-001			
01-001			Revision 31
02-001	01-23-02		Revision 32
02-002	01-30-02		Revision 32

REV. NO.	DATE INSERTED	BY	REMOVED BY INCORPORATING
03-001	06-18-03		Revision 34
03-002	06-25-03		Revision 34
03-003	12-18-03		Revision 35
03-004	01-09-04		Revision 35
04-001	05-28-04		Revision 36
05-001	03-18-05		Revision 37
05-002	12-16-05		Revision 38

This Page Intentionally Left Blank

LIST OF EFFECTIVE PAGES

INSERT LATEST CHANGE PAGES, DESTROY SUPERSEDED PAGES

The highest revision number indicates pages changed, added or removed by the current change.

Date of original and revision pages are:

Original	31 October 1990
Revision 1	29 March 1991
Revision 2	10 May 1991
Revision 3	09 September 1991
Revision 4	20 January 1992
Revision 5	24 August 1992
Revision 6	21 December 1992
Revision 7	01 June 1993
Revision 8	23 July 1993
Revision 9	22 April 1994
Revision 10	26 September 1994
Revision 11	18 January 1995
Revision 12	06 October 1995
Revision 13	31 May 1996
Revision 14	13 September 1996
Revision 15	15 November 1996
Revision 16	06 January 1997
Revision 17	24 February 1997
Revision 18	17 October 1997
Revision 19	16 December 1997
Revision 20	01 June 1998
Revision 21	24 August 1998
Revision 22	10 March 1998
Revision 23	01 June 1999
Revision 24	07 December 1999
Revision 25	28 April 2000
Revision 26	17 August 2000
Revision 27	09 October 2000
Revision 28	30 November 2000
Revision 29	11 May 2001
Revision 30	11 July 2001
Revision 31	05 November 2001
Revision 32	18 March 2002
Revision 33	24 June 2002
Revision 34	21 August 2003
Revision 35	20 May 2004
Revision 36	11 November 2004
Revision 37	13 December 2005
Revision 38	25 May 2006

Cover/Title

Cover/Title . . . . . Revision 38

Change Request

CRi and CRii . . . . . N/A

Temporary Revision

1 . . . . . Revision 38
2 . . . . . Revision 32

List of Effective Pages

A thru J . . . . . Revision 38

Table of Contents

i and ii . . . . . Revision 29
iii . . . . . Revision 34
iv . . . . . Revision 38
v and vi . . . . . Revision 29

Bulletins

1 . . . . . Revision 23
2 . . . . . Revision 24
3 and 4 . . . . . Revision 23
5 and 6 . . . . . Revision 24
7 . . . . . Revision 38
8 . . . . . Revision 23
9/(10 blank) . . . . . Revision 24

Chapter 01

i/(ii blank) . . . . . Revision 26

01-00-00

1 . . . . . Revision 26
2 thru 4 . . . . . Revision 23
5 and 6 . . . . . Revision 26
7 . . . . . Revision 29
8 . . . . . Revision 28
201 . . . . . Revision 23
202 . . . . . Revision 30
203 . . . . . Revision 23
204 . . . . . Revision 26
205 thru 208 . . . . . Revision 23
209 . . . . . Revision 36
210 . . . . . Revision 30
211 and 212 . . . . . Revision 36

Chapter 04
i and ii . . . . . Revision 34
04-00-00
1 thru 14 . . . . . Revision 38
04-00-01
1/(2 blank) . . . . . Revision 26
Chapter 05
i and ii . . . . . Revision 38
05-00-00
1 thru 4 . . . . . Revision 38
05-10-00
1 and 2 . . . . . Revision 34
3 . . . . . Revision 37
4 . . . . . Revision 34
05-20-00
1 thru 12 . . . . . Revision 35
05-20-10
1 thru 4 . . . . . Revision 36
05-20-15
1 . . . . . Revision 29
2 and 3/(4 blank) . . . . . Revision 31
05-20-20
1 . . . . . Revision 36
2 thru 4 . . . . . Revision 37
5 . . . . . Revision 38
6 . . . . . Revision 36
05-50-00
1 thru 7 . . . . . Revision 24
8 . . . . . Revision 26
9 and 10 . . . . . Revision 34
Chapter 06
i and ii . . . . . Revision 34
06-00-00
201 thru 205 . . . . . Revision 23
206 . . . . . Revision 36
207 thru 210 . . . . . Revision 23
211 . . . . . Revision 36
212 . . . . . Revision 34
Chapter 07
i/(ii blank) . . . . . Revision 23
07-00-00
201 thru 206 . . . . . Revision 23
Chapter 08
i/(ii blank) . . . . . Revision 23
08-00-00
201 thru 203/(204 blank) . . . . . Revision 23
08-10-00
201 . . . . . Revision 23
202 and 203 . . . . . Revision 27
204 thru 210 . . . . . Revision 23
211 . . . . . Revision 36
212 thru 217/(218 blank) . . . . . Revision 23
Chapter 09
i/(ii blank) . . . . . Revision 23
09-00-00
201 thru 204 . . . . . Revision 23
Chapter 10
i/(ii blank) . . . . . Revision 23
10-10-00
201 thru 204 . . . . . Revision 23
10-20-00
201 thru 203/(204 blank) . . . . . Revision 23
10-30-00
201 thru 206 . . . . . Revision 23
Chapter 11
i/(ii blank) . . . . . Revision 23
11-00-00
201 thru 217/(218 blank) . . . . . Revision 23
11-40-00
201 thru 211/(212 blank) . . . . . Revision 23
Chapter 12
i . . . . . Revision 23
ii . . . . . Revision 32
12-00-00
301 and 302 . . . . . Revision 23
303 . . . . . Revision 24
304 . . . . . Revision 34
305 . . . . . Revision 26
306 and 307 . . . . . Revision 24
308 . . . . . Revision 26
309 . . . . . Revision 23
310 and 311 . . . . . Revision 32
312 . . . . . Revision 23
Chapter 18
i thru iii/(iv blank) . . . . . Revision 23
18-10-00
201 . . . . . Revision 23
202 . . . . . Revision 31
203 and 204 . . . . . Revision 37

401 thru 404 . . . . . Revision 23
501 . . . . . Revision 23
502 . . . . . Revision 34
503 thru 505 . . . . . Revision 23
506 and 507 . . . . . Revision 24
508 thru 510 . . . . . Revision 23

18-10-60
201 . . . . . Revision 23
202 and 203/(204 blank) . . . . . Revision 31
401 thru 404 . . . . . Revision 23
501 . . . . . Revision 23
502 . . . . . Revision 34
503 thru 509 . . . . . Revision 23
510 . . . . . Revision 37
511 and 512 . . . . . Revision 23

18-20-00
201 . . . . . Revision 34
202 and 203 . . . . . Revision 23
204 . . . . . Revision 34
205 and 206 . . . . . Revision 23

18-20-30
201 thru 205/(206 blank) . . . . . Revision 23

Chapter 20
i and ii . . . . . Revision 38

20-10-00
201 thru 206 . . . . . Revision 38

20-20-00
201 and 202 . . . . . Revision 23

20-30-00
201 and 202 . . . . . Revision 23
203 thru 206 . . . . . Revision 34

20-40-00
201 thru 204 . . . . . Revision 23

20-90-00
201 thru 204 . . . . . Revision 38

Chapter 21
i and ii . . . . . Revision 23

21-10-00
201 thru 204 . . . . . Revision 23

21-40-00
201 thru 207 . . . . . Revision 23
208 . . . . . Revision 27
209 . . . . . Revision 37
210 . . . . . Revision 23
901 thru 911/(912 blank) . . . . . Revision 23

Chapter 25
i . . . . . Revision 24
ii thru vii/(viii blank) . . . . . Revision 23

25-00-00
1 and 2 . . . . . Revision 23

25-10-00
201 thru 205 . . . . . Revision 23
206 . . . . . Revision 24
207 and 208 . . . . . Revision 23

25-15-00
201 thru 204 . . . . . Revision 23
901 and 902 . . . . . Revision 23

25-20-00
201 thru 211/(212 blank) . . . . . Revision 23

25-21-00
201/(202 blank) . . . . . Revision 23
901 thru 908 . . . . . Revision 23

25-30-00
201 thru 214 . . . . . Revision 23

25-40-00
201 thru 207/(208 blank) . . . . . Revision 23

25-50-00
101 thru 106 . . . . . Revision 23
401 thru 408 . . . . . Revision 23
601 and 602 . . . . . Revision 23
901 thru 907/(908 blank) . . . . . Revision 23

25-60-00
201 and 202 . . . . . Revision 23

25-63-00
201 thru 216 . . . . . Revision 23
901 thru 910 . . . . . Revision 23

Chapter 26
i/(ii blank) . . . . . Revision 23

26-10-00
201 thru 203/(204 blank) . . . . . Revision 23

26-20-00
201 and 202 . . . . . Revision 23

Chapter 28
i . . . . . Revision 19
ii . . . . . Revision 37
iii and iv . . . . . Revision 28
v thru vii/(viii blank) . . . . . Revision 31

28-00-00
1 and 2 . . . . . Revision 19
101 . . . . . Revision 29

102 and 103 . . . . . Revision 19
104 . . . . . Revision 23
201 and 202 . . . . . Revision 19
401 thru 414 . . . . . Revision 19
415 and 416 . . . . . Revision 36
417 thru 422 . . . . . Revision 19
501 thru 504 . . . . . Revision 19
505 . . . . . Revision 36
506 . . . . . Revision 19
507 . . . . . Revision 29
508 thru 510 . . . . . Revision 19
601 thru 603 . . . . . Revision 19
604 . . . . . Revision 28
605 thru 607/(608 blank) . . . . . Revision 19
801 thru 807/(808 blank) . . . . . Revision 19

28-00-60
1 thru 3/(4 blank) . . . . . Revision 19
101 . . . . . Revision 29
102 . . . . . Revision 19
103/(104 blank) . . . . . Revision 21
201 and 202 . . . . . Revision 32
401 thru 405 . . . . . Revision 19
406 and 407 . . . . . Revision 34
408 thru 422 . . . . . Revision 19
501 and 502 . . . . . Revision 22
503/(504 blank) . . . . . Revision 21
601 . . . . . Revision 19
602 thru 606 . . . . . Revision 31
801 thru 805/(806 blank) . . . . . Revision 19

28-25-00
1 and 2 . . . . . Revision 20
101/(102 blank) . . . . . Revision 20
201 and 202 . . . . . Revision 20
203 thru 205/(206 blank) . . . . . Revision 19
601 and 602 . . . . . Revision 20
603 thru 605/(606 blank) . . . . . Revision 19
901 and 902 . . . . . Revision 20
903 . . . . . Revision 28
904 thru 918 . . . . . Revision 19

Chapter 32
i . . . . . Revision 19
ii thru vi . . . . . Revision 26

32-10-00
1/(2 blank) . . . . . Revision 19
301 thru 308 . . . . . Revision 19
401 and 402 . . . . . Revision 19
403 and 404 . . . . . Revision 26
405 . . . . . Revision 19
406 and 407/(408 blank) . . . . . Revision 26
601 . . . . . Revision 31
602 thru 605/(606 blank) . . . . . Revision 26
801 thru 805 . . . . . Revision 19
806 and 807/(808 blank) . . . . . Revision 26
901 thru 908 . . . . . Revision 19

32-10-60
1/(2 blank) . . . . . Revision 19
301 thru 303/(304 blank) . . . . . Revision 19
401 . . . . . Revision 19
402 . . . . . Revision 26
403 . . . . . Revision 34
404 . . . . . Revision 20
405 and 406 . . . . . Revision 19
407/(408 blank) . . . . . Revision 20
601 . . . . . Revision 31
602 . . . . . Revision 19
603/(604 blank) . . . . . Revision 22
801 thru 803/804 blank) . . . . . Revision 19

32-40-00
201 thru 206 . . . . . Revision 19

32-40-60
201 and 202 . . . . . Revision 19

32-81-00
201 thru 204 . . . . . Revision 19
901 thru 910 . . . . . Revision 19

32-82-00
201 thru 206 . . . . . Revision 19
401 thru 407/(408 blank) . . . . . Revision 19
901 thru 912 . . . . . Revision 19

Chapter 52
i thru iv . . . . . Revision 36

52-10-00
201 thru 213 . . . . . Revision 25
214 thru 216 . . . . . Revision 36
217 . . . . . Revision 25
218 thru 224 . . . . . Revision 36

52-40-00
201 thru 205/(206 blank) . . . . . Revision 18

52-50-00
201 thru 206 . . . . . Revision 18
207 . . . . . Revision 31
208 thru 210 . . . . . Revision 18

Chapter 53

i thru vi . . . . . Revision 38

53-00-00
201 . . . . . Revision 19
202 . . . . . Revision 37
203 . . . . . Revision 19
204 . . . . . Revision 20

53-10-00
201 thru 206 . . . . . Revision 19

53-20-00
201 thru 203/(204 blank) . . . . . Revision 19

53-30-00
201 . . . . . Revision 35
202 and 203 . . . . . Revision 19
204 thru 214 . . . . . Revision 38

53-30-30
201 . . . . . Revision 26
202 thru 210 . . . . . Revision 34

53-40-00
201 thru 204 . . . . . Revision 19

53-40-30
201 . . . . . Revision 36
202 . . . . . Revision 19
203 . . . . . Revision 22
204 . . . . . Revision 19
205 . . . . . Revision 36
206 thru 211 . . . . . Revision 34
212 . . . . . Revision 37

53-50-10
201 and 202 . . . . . Revision 19
203 . . . . . Revision 22
204 and 205 . . . . . Revision 37
206 and 207/(208 blank) . . . . . Revision 19

53-50-30
201 . . . . . Revision 30
202 . . . . . Revision 32
203 and 204 . . . . . Revision 33
205 and 206 . . . . . Revision 34
207 . . . . . Revision 29
208 thru 212 . . . . . Revision 34

Chapter 62

i thru viii . . . . . Revision 37

62-00-00
101 . . . . . Revision 20
102 . . . . . Revision 31

62-10-00
401 thru 403/(404 blank) . . . . . Revision 20
601 thru 607 . . . . . Revision 20
608 . . . . . Revision 33
609 . . . . . Revision 29
610 and 611 . . . . . Revision 35
612 . . . . . Revision 20
801 . . . . . Revision 33
802 thru 808 . . . . . Revision 20
809 . . . . . Revision 34
810 and 811/(812 blank) . . . . . Revision 20

62-20-00
401 . . . . . Revision 36
402 and 403 . . . . . Revision 20
404 . . . . . Revision 36
405 and 406 . . . . . Revision 20
601 and 602 . . . . . Revision 20
603 . . . . . Revision 29
604 . . . . . Revision 25
605 thru 607 . . . . . Revision 20
608 . . . . . Revision 37
609 and 610 . . . . . Revision 20
801 . . . . . Revision 20
802 . . . . . Revision 34
803 thru 810 . . . . . Revision 20
811 thru 813 . . . . . Revision 37
814 . . . . . Revision 21
815 . . . . . Revision 35
816 . . . . . Revision 34
817 . . . . . Revision 37
818 . . . . . Revision 29
819 and 820 . . . . . Revision 37

62-20-60
401 . . . . . Revision 36
402 . . . . . Revision 20
403 and 404 . . . . . Revision 36
405/(406 blank) . . . . . Revision 20
601 and 602 . . . . . Revision 20
603 . . . . . Revision 33
604 . . . . . Revision 20
605 . . . . . Revision 34
606 and 607 . . . . . Revision 33
608 . . . . . Revision 20
609 . . . . . Revision 25
610 . . . . . Revision 20
801 thru 804 . . . . . Revision 20
805 thru 808 . . . . . Revision 37

809 . . . . . Revision 22
810 . . . . . Revision 37
811 . . . . . Revision 22
812 and 813 . . . . . Revision 34
814 . . . . . Revision 37

62-30-00
401 . . . . . Revision 20
402 . . . . . Revision 36
403 and 404 . . . . . Revision 31
405 . . . . . Revision 36
406 . . . . . Revision 27
407 and 408 . . . . . Revision 35
601 and 602 . . . . . Revision 32
801 thru 807/(808 blank) . . . . . Revision 20

62-30-60
401 . . . . . Revision 20
402 . . . . . Revision 27
403 . . . . . Revision 31
404 thru 406 . . . . . Revision 35
407/(408 blank) . . . . . Revision 20
601 and 602 . . . . . Revision 32
801 and 802 . . . . . Revision 20

Chapter 63

i thru x . . . . . Revision 36

63-00-00
101 . . . . . Revision 28
102 . . . . . Revision 29
103 . . . . . Revision 30
104 . . . . . Revision 28

63-10-00
401 thru 403 . . . . . Revision 20
404 . . . . . Revision 36
405 . . . . . Revision 27
406 . . . . . Revision 32
407 . . . . . Revision 20
408 . . . . . Revision 32
409 . . . . . Revision 34
410 . . . . . Revision 32
411 . . . . . Revision 34
412 thru 414 . . . . . Revision 32
601 . . . . . Revision 26
602 . . . . . Revision 20
603 . . . . . Revision 26
604 thru 606 . . . . . Revision 20
801 thru 804 . . . . . Revision 20

63-15-10
401 thru 403 . . . . . Revision 20
404 . . . . . Revision 22
405 thru 409 . . . . . Revision 20
410 . . . . . Revision 28
601 thru 603 . . . . . Revision 20
604 . . . . . Revision 37
605/(606 blank) . . . . . Revision 20
801 and 802 . . . . . Revision 20

63-15-30
201 . . . . . Revision 20
202 . . . . . Revision 36
203 thru 207/(208 blank) . . . . . Revision 20

63-20-00
201 thru 203 . . . . . Revision 20
204 and 205 . . . . . Revision 36
206 and 207/(208 blank) . . . . . Revision 20

63-20-25
201 and 202 . . . . . Revision 20
203 . . . . . Revision 25
204 . . . . . Revision 28
205 . . . . . Revision 24
206 thru 209/(210 blank) . . . . . Revision 29

63-21-00
401 and 402 . . . . . Revision 20
403 . . . . . Revision 28
404 thru 408 . . . . . Revision 20
409 . . . . . Revision 36
410 . . . . . Revision 20
411 . . . . . Revision 36
412 . . . . . Revision 37
601 and 602 . . . . . Revision 36
603 . . . . . Revision 37
604 . . . . . Revision 36
801 and 802 . . . . . Revision 22
803 . . . . . Revision 37
804 and 805 . . . . . Revision 36
806 and 807 . . . . . Revision 37
808 and 809 . . . . . Revision 36
810 . . . . . Revision 22

63-22-00
201 thru 204 . . . . . Revision 20
401 thru 413/(414 blank) . . . . . Revision 20
601 and 602 . . . . . Revision 20
901 thru 917/(918 blank) . . . . . Revision 20

63-25-10
201 . . . . . Revision 36
202 thru 207/(208 blank) . . . . . Revision 20

63-25-30
201 . . . . . Revision 36
202 . . . . . Revision 20
203 . . . . . Revision 33
204 . . . . . Revision 20

63-30-00
201 and 202 . . . . . Revision 20
203 and 204 . . . . . Revision 36
205 . . . . . Revision 29
206 . . . . . Revision 36

Chapter 64

i . . . . . Revision 21
ii . . . . . Revision 22
iii and iv . . . . . Revision 34

64-00-00
101 . . . . . Revision 21
102 . . . . . Revision 34

64-00-05
901 thru 908 . . . . . Revision 21

64-10-00
201 . . . . . Revision 34
202 thru 206 . . . . . Revision 21
207 . . . . . Revision 32
208 thru 210 . . . . . Revision 21
211 thru 214 . . . . . Revision 22

64-20-00
201 thru 203 . . . . . Revision 21
204 . . . . . Revision 28
205 thru 207/(208 blank) . . . . . Revision 21

64-25-30
401 . . . . . Revision 33
402 and 403 . . . . . Revision 21
404 . . . . . Revision 24
405 . . . . . Revision 21
406 thru 408 . . . . . Revision 34
601 and 602 . . . . . Revision 34
801 thru 804 . . . . . Revision 21
805 . . . . . Revision 24
806 . . . . . Revision 21

64-30-00
201 . . . . . Revision 21
202 . . . . . Revision 36
203 and 204 . . . . . Revision 21
205 thru 207 . . . . . Revision 34
208 thru 210 . . . . . Revision 21

Chapter 67

i thru vii . . . . . Revision 29
viii . . . . . Revision 30
ix . . . . . Revision 33
x . . . . . Revision 34
xi and xii . . . . . Revision 33

67-00-00
101 . . . . . Revision 30
102 and 103 . . . . . Revision 21
104 . . . . . Revision 29
105 thru 111/(112 blank) . . . . . Revision 30

67-10-00
1 thru 5/(6 blank) . . . . . Revision 21
401 thru 405 . . . . . Revision 21
406 . . . . . Revision 37
407 thru 411 . . . . . Revision 21
412 . . . . . Revision 29
413 . . . . . Revision 24
414 . . . . . Revision 21
415 thru 418 . . . . . Revision 29
419 . . . . . Revision 21
420 . . . . . Revision 29
421 . . . . . Revision 21
422 . . . . . Revision 29
423 . . . . . Revision 31
424 . . . . . Revision 29
501 thru 503 . . . . . Revision 21
504 and 505 . . . . . Revision 34
506 . . . . . Revision 21
507 . . . . . Revision 34
508 and 509 . . . . . Revision 21
510 . . . . . Revision 24
511 . . . . . Revision 38
512 thru 515 . . . . . Revision 21
516 . . . . . Revision 36
517 thru 521 . . . . . Revision 21
522 . . . . . Revision 36
523 . . . . . Revision 29
524 . . . . . Revision 31
525 and 526 . . . . . Revision 36
527 thru 530 . . . . . Revision 21
601 . . . . . Revision 28
602 . . . . . Revision 21
603 . . . . . Revision 28

604 and 605 . . . . . Revision 21
606 . . . . . Revision 30
607 thru 610 . . . . . Revision 28
801 thru 813 . . . . . Revision 21
814 and 815 . . . . . Revision 31
816 . . . . . Revision 21

67-10-20
201 thru 208 . . . . . Revision 21

67-20-10
1 and 2 . . . . . Revision 21
401 and 402 . . . . . Revision 21
403 . . . . . Revision 34
404 . . . . . Revision 26
405 thru 407/(408 blank) . . . . . Revision 21
501 thru 504 . . . . . Revision 21
601 and 602 . . . . . Revision 21
801 thru 806 . . . . . Revision 21

67-20-30
1 . . . . . Revision 34
2 . . . . . Revision 25
401 . . . . . Revision 18
402 . . . . . Revision 34
403 . . . . . Revision 18
404 . . . . . Revision 33
405 . . . . . Revision 38
406 . . . . . Revision 34
407 . . . . . Revision 38
408 . . . . . Revision 25
409 thru 412 . . . . . Revision 33
413 . . . . . Revision 25
414 thru 416 . . . . . Revision 30
501 . . . . . Revision 33
502 . . . . . Revision 18
503 . . . . . Revision 20
504 . . . . . Revision 18
505 . . . . . Revision 30
506 . . . . . Revision 18
507 . . . . . Revision 26
508 . . . . . Revision 30
509 . . . . . Revision 37
510 and 511 . . . . . Revision 30
512 . . . . . Revision 36
513 thru 516 . . . . . Revision 30
601 . . . . . Revision 34
602 and 603 . . . . . Revision 35
604 and 605 . . . . . Revision 24
606 . . . . . Revision 34
801 thru 803 . . . . . Revision 18
804 and 805 . . . . . Revision 30
806 . . . . . Revision 34

Chapter 71
i thru x . . . . . Revision 36

71-00-00
1/(2 blank) . . . . . Revision 22
401 thru 405 . . . . . Revision 22
406 . . . . . Revision 30
407 thru 411 . . . . . Revision 22
412 and 413/(414 blank) . . . . . Revision 26

71-00-30
1/(2 blank) . . . . . Revision 22
401 thru 404 . . . . . Revision 22
405 and 406 . . . . . Revision 34
407 thru 411 . . . . . Revision 22
412 . . . . . Revision 26

71-00-47
1 thru 3/(4 blank) . . . . . Revision 22
401 thru 406 . . . . . Revision 22
407 . . . . . Revision 36
408 thru 411/(412 blank) . . . . . Revision 29

71-10-00
201 thru 206 . . . . . Revision 22

71-10-05
201/(202 blank) . . . . . Revision 22
901 thru 904 . . . . . Revision 22

71-10-10
1 . . . . . Revision 22
2 . . . . . Revision 36
3 and 4 . . . . . Revision 22
101 thru 106 . . . . . Revision 36
201 thru 207/(208 blank) . . . . . Revision 22
401 . . . . . Revision 22
402 . . . . . Revision 37
403/(404 blank) . . . . . Revision 22
601 thru 603 . . . . . Revision 22
604 . . . . . Revision 38
801 thru 814 . . . . . Revision 22
901 thru 923/(924 blank) . . . . . Revision 22

71-10-60
1/(2 blank) . . . . . Revision 22
101/(102 blank) . . . . . Revision 22
401 . . . . . Revision 22
402 thru 404 . . . . . Revision 29

601 . . . . . Revision 29
602 . . . . . Revision 33

71-20-00
1/(2 blank) . . . . . Revision 22
401 . . . . . Revision 26
402 . . . . . Revision 22
403 and 404 . . . . . Revision 34
405/(406 blank) . . . . . Revision 22
601/(602 blank) . . . . . Revision 22
801/(802 blank) . . . . . Revision 22

71-30-00
1 and 2 . . . . . Revision 22
101 thru 103/(104 blank) . . . . . Revision 22
401 thru 412 . . . . . Revision 22
413 and 414 . . . . . Revision 26
601 and 602 . . . . . Revision 32
801 thru 804 . . . . . Revision 22
901 thru 905/(906 blank) . . . . . Revision 22

71-60-00
201 thru 205/(206 blank) . . . . . Revision 22

Chapter 75
i/(ii blank) . . . . . Revision 22

75-10-00
201 thru 203 . . . . . Revision 22
204 . . . . . Revision 37
205 and 206 . . . . . Revision 22

Chapter 76
i thru iv . . . . . Revision 37

76-00-00
1 and 2 . . . . . Revision 22
101 and 102 . . . . . Revision 22

76-10-00
201 thru 214 . . . . . Revision 22
215 . . . . . Revision 35
216 . . . . . Revision 22
217 thru 219 . . . . . Revision 35
220 and 221 . . . . . Revision 22
222 and 223 . . . . . Revision 35
224 . . . . . Revision 22

76-20-00
201 thru 213/(214 blank) . . . . . Revision 22

76-47-00
201 . . . . . Revision 22
202 and 203 . . . . . Revision 37
204 . . . . . Revision 33
205 and 206 . . . . . Revision 37
207 . . . . . Revision 22
208 thru 211 . . . . . Revision 37
212 . . . . . Revision 36

Chapter 78
i and ii . . . . . Revision 35

78-20-00
201 thru 203 . . . . . Revision 38
204 thru 209/(210 blank) . . . . . Revision 22

78-30-00
201 . . . . . Revision 38
202 thru 204 . . . . . Revision 35

Chapter 79
i and ii . . . . . Revision 23

79-00-00
201 thru 212 . . . . . Revision 23

79-10-10
201 and 202 . . . . . Revision 26
901 thru 903/(904 blank) . . . . . Revision 23

Chapter 91
i/(ii blank) . . . . . Revision 29

91-00-00
1 . . . . . Revision 23
2 . . . . . Revision 34
3 . . . . . Revision 36
4 . . . . . Revision 34
5 . . . . . Revision 37
6 thru 8 . . . . . Revision 34
9 . . . . . Revision 37
10 . . . . . Revision 34
11 . . . . . Revision 29
12 . . . . . Revision 34
13 . . . . . Revision 29
14 . . . . . Revision 34
15 . . . . . Revision 37
16 . . . . . Revision 29
17 . . . . . Revision 37
18 . . . . . Revision 29
19 and 20 . . . . . Revision 31

This Page Intentionally Left Blank

NOTE: The following sections are applicable to the helicopter models denoted to the right of the section.

Section	Title	369D	369E	369FF	500N	600N
01	**INTRODUCTION**					
01-00-00	Introduction	X	X	X	X	X
04	**AIRWORTHINESS LIMITATIONS**					
04-00-00	Airworthiness Limitations	X	X	X	X	X
04-00-01	Airworthiness Limitations Supplements					X
05	**CONTINUED AIRWORTHINESS**					
05-00-00	Checks/Inspections	X	X	X	X	X
05-10-00	Component Overhaul/Recommended Replacement	X	X	X	X	X
05-20-00	100-Hour or Annual Inspection	X	X	X	X	X
05-20-10	300-Hour Inspection	X	X	X	X	X
05-20-15	Yearly Inspection	X	X	X	X	X
05-20-20	Special Inspections Hourly and Calendar	X	X	X	X	X
05-50-00	Conditional Inspections	X	X	X	X	X
06	**DIMENSIONS AND AREAS**					
06-00-00	Dimensions and Areas	X	X	X	X	X
07	**LIFTING AND JACKING**					
07-00-00	Lifting and Jacking	X	X	X	X	X
08	**LEVELING / WEIGHT AND BALANCE**					
08-00-00	Leveling	X	X	X	X	X
08-10-00	Weight and Balance	X	X	X	X	X
09	**TOWING**					
09-00-00	Towing	X	X	X	X	X
10	**PARKING AND MOORING**					
10-10-00	Parking and Mooring	X	X	X	X	X
10-20-00	Storage	X	X	X	X	X
10-30-00	Blade Folding	X	X	X	X	
11	**PLACARDS AND MARKINGS**					
11-00-00	Placards and Markings	X	X	X	X	
11-40-00	Placards and Markings (600N)					X
12	**SERVICING**					
12-00-00	Helicopter Servicing	X	X	X	X	X
18	**VIBRATION AND NOISE ANALYSIS**					
18-10-00	Main Rotor Track and Balance	X	X	X	X	
18-10-60	Main Rotor Track and Balance (600N)					X
18-20-00	Tail Rotor Balance	X	X	X		
18-20-30	Notar® Anti-Torque System Fan Balance				X	X

Section	Title	369D	369E	369FF	500N	600N
20	**STANDARD PRACTICES**					
20-10-00	Torque	X	X	X	X	X
20-20-00	Cleaning	X	X	X	X	X
20-30-00	Painting	X	X	X	X	X
20-40-00	Corrosion Prevention	X	X	X	X	X
20-90-00	Nondestructive Inspection	X	X	X	X	X
21	**ENVIRONMENTAL CONTROL SYSTEM**					
21-10-00	Ventilation Systems	X	X	X	X	X
21-40-00	Heating System	X	X	X	X	X
25	**EQUIPMENT / FURNISHINGS**					
25-00-00	Equipment/Furnishings	X	X	X	X	X
25-10-00	Upholstered Seats	X	X	X	X	X
25-15-00	Mesh Seats	X	X	X	X	X
25-20-00	Seat Belts/Inertia Reel	X	X	X	X	X
25-21-00	Seating/Belts (Four on the Floor)	X	X	X	X	
25-30-00	Interior Trim	X	X	X	X	X
25-40-00	Miscellaneous Furnishings	X	X	X	X	X
25-50-00	Cargo Hook	X	X	X	X	X
25-60-00	Emergency First Aid Kit	X	X	X	X	X
25-63-00	Hoist Passenger/Cargo	X	X	X	X	
26	**FIRE PROTECTION**					
26-10-00	Engine Fire Detection System					X
26-20-00	Fire Extinguisher	X	X	X	X	X
28	**FUEL SYSTEM**					
28-00-00	Fuel System (369D/E/FF - 500N)	X	X	X	X	
28-00-60	Fuel System (600N)					X
28-25-00	Anti-Ice / Airframe Fuel Filter (369D/E - 500/600N)	X	X	X	X	X
32	**LANDING GEAR**					
32-10-00	Landing Gear System (369D/E/FF - 500N)	X	X	X	X	
32-10-60	Landing Gear System (600N)					X
32-40-00	Ground Handling Wheels (369D/E/FF - 500N)	X	X	X	X	
32-40-60	Ground Handling Wheels (600N)					X
32-81-00	Utility Float System (369D/E)	X	X			
32-82-00	Emergency Float System (369D/E/FF - 500N)	X	X	X	X	
52	**DOORS**					
52-10-00	Crew, Passenger, Cargo Doors and Windows	X	X	X	X	X
52-40-00	Engine Access Doors	X	X	X	X	X
52-50-00	Miscellaneous Access Doors	X	X	X	X	X

Contents

Table 1. ACTIVE SERVICE BULLETINS (Cont.)

369D	369E	369F	500N	600N	SUBJECT	DATE
				013R1	Low Fuel Level Warning Light	4-15-98
	090R1	077R1	017R1	014R1	Socket Contact Assembly Inspection	9-25-98
				015	Engine Fuel Control Box Replacement	4-23-99
				016R1	Audio Warning System Replacement	9-19-00
				017	FADEC Manual Switch Guard Modification	10-6-98
				018R1	Torque Pressure Transducer High Intensity Radiated Fields (HIRF) Protection Modification	2-7-00
				019	FADEC Wire Harness Standoff Installation/Inspection	4-23-99
				020R2	Electromagnetic Compatability Test (EMC) for Optional Equipment Effects on the FADEC Control	4-14-03
				021R1	Inspection/Reidentification/Serialization of Cyclic Control Stick Sockets and Left Hand Command (Co-Pilot) Cyclic Tube	3-11-99
197	091		018		Engine Fuel Pressure Switch Replacement	2-23-99
198	092				Tail Rotor Fork Inspection, Four-Bladed	5-10-99
				022	Torque Transducer Replacement	4-23-99
				023R1	Cyclic Stick Replacement	7-30-99
				024R1	Link Assembly Replacement	4-6-99
				025	Fuel System Inspection	7-2-99
199	093		019		Turbine Outlet Temperature (TOT) Indicating System, One Time Inspection	1-11-00
				026	Turbine Outlet Temperature (TOT) Indicating System, One Time Inspection	1-11-00
			020R2	027R2	Forward and Center Thruster Control Cables, Conduit Cap Relief Area, Inspection	4-24-00
			021	028	Forward and Center Thruster Cables, Conduit Cap at Telescopic Swivel End, Inspection	11-19-99
200	094	078	022		Landing Gear Strut Inspection and Fairing Modification	4-7-00
				029	Motive Flow Restrictor Removal	1-10-01
				030R1	Inspection of Vertical Stabilizer and Torque Tube and Replacement of Attaching Hardware	5-25-01
201R2	095R2	079R2	023R2	031R2	Main Rotor Blade Torque Event Inspection	2-04-04
				032	Turbine Outlet Temperature (TOT) Indicator Replacement	12-13-01
				033	Main Rotor Drive Shaft Life Reduction	12-13-01
				034	Torque Transducer Electrical Connector One Time Inspection	12-13-01
			024	035	Fan Pitch Control Aft Tube Assembly One Time Inspection	10-23-01
				036	Tailboom Assembly Attach Fitting One Time Inspection and Repair	11-2-01
202	096	080	025	037	Main Transmission Bonding Jumper Inspection and Rework	8-14-02
				038	Exhaust Duct Inspection	5-6-03
		081			Minimum N1 Starting Speed Decal/Placard Installation	7-22-03
				039	Tailboom Attach Fittings and Upper Longerons Inspection	12-9-03
				040	Control Support Bracket Assembly Life Reduction with YSAS Installed	12-19-03
			026	041	Tailboom Assembly Overlap Inspection and Rework	11-26-03
			027	042	Forward and Center Thruster Cable Assemblies Connector One-Time Inspection	5-03-04
203R1	097R1	082R1			Tail Rotor Blade Abrasion Strip Tap Test and Modification	1-23-06
				043	Tailboom Assembly Attach Fitting One Time Inspection, Attach Fitting and Nutplate Replacement	4-13-06

4. Cancelled or Superceded Service Information Notices

(1). Table 2 a list of Service Information Notices that have been cancelled or superceded.

(2). Updated information, pertinent to the Notice, has been incorporated into the appropriate manuals.

(3). If the Notice is superceded by another Notice, it will be noted in the Subject column after the description.

5. Scope

The following is an explanation of how to read Table 2.

(1). **DN**-369D Model Helicopters
EN-369E Model Helicopters
FN-369F and 369FF Model Helicopters
NN-500N Model Helicopters.

(2). **Subject** - A brief description of the Notice.

(3). **Date** - Date the Notice was cancelled or superceded.

Table 2. CANCELLED OR SUPERCEDED SERVICE INFORMATION NOTICES

369D	369E	369F	500N	600N	SUBJECT	DATE
2.3					Main Rotor Strap Pack Lamination Inspection (Superceded by DN-154)	1-15-88
4.1					Main Rotor Blade Phasing, Tracking and Balancing	8-2-93
5					600-Hour Periodic Inspection - Model 369D Cyclic Control System	8-2-93
7					Installation of 369D21008 Main Rotor Pitch Control Rod Assembly, Upper and Lower Rod End Bearings	8-2-93
15					Periodic Inspection of 369D26300 and 369D26301 Landing Gear Damper Assemblies	8-2-93
28					Field Modification of 369D29919 Main Rotor Blade Phasing Kit to new 369D29919-501 Configuration	8-2-93
29.3					Periodic Replacement of 369H5655-3 and -5 Oil Cooler Blower Fan Bearings; Inspection of Pulley Attach Hardware and Driveshaft Couplings; Inspection and Adjustment of Fan Drive Belt; Driveshaft Compression Check	8-2-93
32					New Periodic Inspection Intervals - Battery Overtemperature Warning System	8-2-93
33.1					Replacement of 369A1602 Tail Rotor Drive Fork Hinge Bolt and 369A1603 Nut; New Assembly Procedure for Tail Rotor Hub and Drive Fork Unit; Periodic Check of Flapping Hinge Bolt Preload	8-2-93
38					Daily Inspection of 369H5307 Tail Rotor Stop and 369D21724-3 Support	8-2-93
41.1					Operational Check of Engine Fuel Pump Filter Pressure (Bypass) Switch Assembly	8-2-93
	2				Inspection of Spare Main Rotor Blade Root Fitting Assemblies; Inspection of Main Rotor Hub Lead-Lag Link Assemblies (Superceded by EN-42)	11-13-87
		2			Inspection of Main Rotor Hub Lead-Lag Link Assemblies (Superceded by FN-31)	11-13-87
53.1					100-Hour Periodic Inspection of Fuel Tank Sending Unit and Fuel Low Warning Light Indicating System	8-2-93
57					Field Repair of 369D21300 Pitch Housing Assembly, Main Rotor Hub	8-2-93
61.2					Periodic Check of 369D21400-502 and M50452 Main Rotor Elastomeric Damper Assemblies	8-2-93
64					Pilot/Operator Check of 369D21210-501 Main Rotor Hub Strap Pack Assembly (Superseded by DN-154)	1-15-88
74					Un-Assigned	
75.1					Procedure for Installation of Tail Rotor Drive Shaft (Superceded by DN-95)	9-27-82
77.1					Main Rotor Strap Pack Lamination Inspection (Superceded by DN-154)	1-15-88

AIRWORTHINESS LIMITATIONS

Type Certificate No. H3WE

FAA Approved Airworthiness Limitations for MD Helicopters, Inc., Models 369D/E/F/FF and 500/600N.

1. General

The Airworthiness Limitations section is FAA approved and specifies maintenance required under Code of Federal Regulations (CFR), Title 14, Federal Aviation Regulation (FAR), Part 43.16 and 91.403 unless an alternative program has been FAA approved.

REVISION:	DATE	FAA SIGNATURE AND DATE
Original Issue:	October 31, 1990	Not FAA approved
Revision 1:	March 29, 1991	Not FAA approved this revision
Revision 2:	May 10, 1991	6/20/91
TR 91-001	August 12, 1991	8/14/91
Revision 3:	September 9, 1991	9/12/91
TR 91-002	November 5, 1991	11/7/91
Revision 4:	January 20, 1992	01/16/92
TR 92-004	May 20, 1992	05/27/92
Revision 5:	August 24, 1992	08/19/92
TR 92-005	November 20, 1992	11/12/92
Revision 6:	December 21, 1992	12/4/92
Revision 7:	June 1, 1993	Section 04-00-00 Not Affected This Revision
TR 93-002	May 27, 1993	5/27/93
Revision 8:	July 23, 1993	7/13/93
TR 94-001	January 21, 1994	02/09/94
Revision 9:	April 22, 1994	3-29-94 ACTING MASR.
Revision 10:	September 26, 1994	Section 04-00-00 Not Affected This Revision
TR 94-002	October 24, 1994	10/24/94

REVISION:	DATE	FAA SIGNATURE AND DATE
Revision 11:	January 18, 1995	01/23/95
Revision 12:	October 6, 1995	Section 04-00-00 Not Affected This Revision
TR 96-002:	April 24, 1996	04/24/96
Revision 13:	May 31, 1996	Michael E. O'Neil acting Mgr ANM 120L 6/12/96
Revision 14:	September 13, 1996	09/09/96
Revision 15:	November 15, 1996	Section 04-00-00 Not Affected This Revision
Revision 16:	January 6, 1997	Section 04-00-00 Not Affected This Revision
Revision 17:	February 24, 1997	02/20/97
TR 97-001:	July 2, 1997	07/02/97
TR 97-002:	August 19, 1997	08/19/97
Revision 18:	October 17, 1997	Section 04-00-00 Not Affected This Revision T/R 97-001 and 97-002 Previously Signed
Revision 19:	December 16, 1997	12/19/97
TR 98-001:	March 25, 1998	03/25/98
Revision 20:	June 1, 1998	Section 04-00-00 Not Affected This Revision T/R 98-001 Previously Signed
TR 98-002:	June 22, 1998	ACTING MGR. 7/10/98
TR 98-003:	3 August 1998	8/3/98
Revision 21:	24 August 1998	Section 04-00-00 Not Affected This Revision T/R 98-002 and 98-003 Previously Signed
Revision 22:	10 March 1999	Section 04-00-00 Not Affected This Revision
Revision 23:	1 June 1999	Section 04-00-00 Not Affected This Revision
Revision 24:	7 December 1999	Maurice P. Cook ACTING MGR 12/30/99
Revision 25:	28 April 2000	Section 04-00-00 Not Affected This Revision
Revision 26:	17 August 2000	8/11/00
Revision 27:	9 October 2000	Section 04-00-00 Not Affected This Revision
Revision 28:	30 November 2000	Section 04-00-00 Not Affected This Revision

REVISION:	DATE	FAA SIGNATURE AND DATE
Revision 29:	11 May 2001	5/4/01 5/14/01
Revision 30:	11 July 2001	Section 04-00-00 Not Affected This Revision
TR 01-001:	10 August 2001	8/8/01
Revision 31:	5 November 2001	Section 04-00-00 Not Affected This Revision T/R 01-001 Previously Signed
TR 02-002:	30 January 2002	1/23/02
Revision 32:	18 March 2002	3/15/02
Revision 33:	24 June 2002	6/11/02
TR 03-001:	18 June 2003	6/13/03
TR 03-002:	25 June 2003	7/2/03
Revision 34:	21 August 2003	Section 04-00-00 Not Affected This Revision T/R 03-001 and 03-002 Previously Signed
TR 03-003:	30 September 2003	12/3/03
TR 03-004:	17 December 2003	1/7/04
Revision 35:	20 May 2004	Section 04-00-00 Not Affected This Revision T/R 03-003 and 03-004 Previously Signed
TR 04-001:	28 May 2004	6/7/04
Revision 36:	11 November 2004	11/3/04
Revision 37:	13 December 2005	Section 04-00-00 Not Affected This Revision
TR 05-002:	16 December 2005	12/29/05 12/29/05
Revision 38:	25 April 2006	Section 04-00-00 Not Affected This Revision T/R 05-002 Previously Signed

This document conforms to Main Rotor Stress Analysis 369D/E, Rev. U.
This document conforms to Stress Analysis 369FF, Rev. R.
This document conforms to Service Life Analysis 500N, Rev. U.
This document conforms to Service Life Analysis 600N, Rev. Y.

AIRWORTHINESS LIMITATIONS

2. Component Mandatory Replacement

The Airworthiness Limitation Replacement Schedule specifies the mandatory replacement time, structural inspection interval and related structural inspection procedures approved per the certificate basis of the Type Certificate Data Sheet No. H3WE and CAR 6 (6.250, 6.251) and CFR 27.571 for models 500/600N unique components only. At the listed finite-life, components or assemblies must be removed from the helicopter and permanently retired from service. At the listed inspection interval, the components or assemblies must be inspected in accordance with the Handbook of Maintenance Instructions (HMI). The title of the task and section of the HMI are referred to which provide the inspection procedures and criteria.

NOTE: Refer to CFR Part 43.10 for latest requirements for the removal, installation, storage and disposition of life-limited parts.

(1). A "life-limited'' part is a physical component of the helicopter to which a maximum number of allowable operating hours or cycles are assigned. Certain assemblies and components on the helicopter have a limited life established by MDHI and approved by FAA Engineering. For example, a part with an assigned limit of 1000 hours, may accumulate 1000 hours of operation in service. Upon completion of the 1000 hours of operation, useful life of the part is ended. The finite-life assigned to different parts varies according to engineering fatigue tests, part experience, etc. The parts listed in this section must be removed from the helicopter at the finite-life indicated and identified as to it's expired life (Ref, Table 1, Note (1)).

(2). All parts not having an assigned life or stated to be of unlimited life, have a life of not less than 20,000 hours.

(3). When a life-limited part or an assembly that incorporates a life-limited part is installed on a new or used helicopter, the nomenclature, part number, serial number, component time and current helicopter hours are recorded in the Log Book and component log for the helicopter. Whether the life-limited part is new or used, the remaining number of useful life hours and previous inspection time, if applicable, for the part is added to the existing helicopter time. The total helicopter hours obtained then denotes the subsequent time at which the part must be removed from the helicopter or inspected.

(4). If a life-limited part, is part of an assembly, the assembly must be removed from the helicopter when the time expires. The assembly may be overhauled and restored to maximum number of hours of useful life by installing new life-limited parts plus all other parts specified in the overhaul instructions (Refer to Component Overhaul Manual).

(5). If interchanged between different model helicopters (for instance, Model 369D to 369FF or vice versa), any component having a limited life or overhaul schedule must be restricted to the lowest service life or TBO schedule indicated for the helicopter models and serial numbers affected.

(6). Refer to the appropriate Allison Operation and Maintenance Manual for engine component replacement requirements.

3. Component Mandatory Inspections

Some components with mandatory inspection intervals require inspections to be completed in accordance with procedures detailed in other sections of this maintenance manual. The appropriate inspection procedures are referenced in the **Notes** flagged to each component to be inspected. All maintenance manual procedures which are referenced in the FAA Approved Airworthiness Limitations Component Mandatory Replacement Schedule are FAA approved procedures which cannot be changed without FAA review and approval of the proposed changes.

4. Retirement Index Number (RIN)

(1). A Retirement Index Number (RIN) is a number that accounts for different usage spectra in assigning the retirement time for a component.

The RIN is calculated as the sum of an adjustment factor times flight hours plus another adjustment factor times Torque Events.

When a component reaches 1,000,000 RIN's, it has reached it's maximum life and is to be scrapped.

5. Torque Event (TE)

A Torque Event (TE) is defined as:

The transition to a hover from forward flight.

Any external lift operation.

NOTE: An external lift can either be on the cargo hook, external hoist or in external baskets.

For external lift operators, an external load is recorded as two (2) TE's (pick-up and drop-off).

Hover taxi with no external load will typically result in no TEs.

6. External Lift and Torque Event (TE) Requirements

The 369D/E/F/FF - 500/600N helicopters are multi-use helicopters. If the helicopter is used primarily for external lifts or training flights (high TE flights), there may be a reduction in inspection intervals of some components.

CAUTION For safe operation of the helicopter, TE's must be recorded in the Rotorcraft Log Book. Each external lift will be recorded as two (2) TE's.

(1). Determine the number of TE's and external lifts the helicopter accumulates per hour of flight time.

(2). Record all TE's in Rotorcraft Log Book and continue to record all TE's.

(3). Perform required TE inspections.

Table 1. Airworthiness Limitations Schedule

Component (1)	Model	Part Number (2)	Finite Life Hours (1)	Mandatory Inspection Hours
Main Rotor System				
Blade assembly, main rotor	369D/E(5)(6)	369D21100	3530 (37)	25 (11)(20)
		369D21100-516	3530 (37)	100 (20)
		369D21100-517	2500 (31)	25 (22)
		369D21100-517	3530 (37)	100 (20)
		369D21100-523	4000 (37)	100 (20)
		369D21120-501	3530 (37)	100 (20)
		369D21120-503	3530 (37)	100 (20)
	369F/FF (6)	369D21102	3430 (37)	25 (11)(20)
		369D21102-503	3430 (37)	100 (20)
		369D21102-517	2500 (31)	25 (22)
		369D21102-517	3430 (37)	100 (20)
		369D21102-523	4000 (37)	100 (20)
		369D21121-501	3430 (37)	100 (20)
		369D21121-503	3430 (37)	100 (20)
	500N (6)	369D21102-503	3430 (37)	100 (20)
		369D21102-517	2500 (31)	25 (22)
		369D21102-517	3430 (37)	100 (20)
		369D21102-523	4000 (37)	100 (20)
		369D21121-501	3430 (37)	100 (20)
		369D21121-503	3430 (37)	100 (20)
	600N (6)	369D21102-517 (21)	1900 (32)(37)	100 (20)
		369D21102-523	3200 (33)(37)	100 (20)
		369D21121-501	3200 (33)(37)	100 (20)
		369D21121-503	3200 (33)(37)	100 (20)
Folding pin, main rotor blade attach	369D/E/F/FF	369A1004	2850	
		369A1004-3	2850	
		369A1004-5	7600	
	500/600N	369A1004-5	7600	
Hub subassembly, main rotor	369D/E/F/FF 500N	369D21201	8900	
Pitch housing assembly, main rotor hub	369D	369D21300	9100	
		369D21300-501	9100	
	369E/F/FF 500N	369D21300-501	9100	

Table 1. Airworthiness Limitations Schedule (Cont.)

Component (1)	Model	Part Number (2)	Finite Life Hours (1)	Mandatory Inspection Hours
Retention strap assembly, main rotor hub	369D	369D21210 369D21210-501	2770 2770	100 (4) 100 (4)
	369E/F/FF	369D21210-501	2770	100 (4)
	500/600N	369D21210-501	2770	100 (4)
Bolt - lead-lag hub, main rotor	369D	369A1220	6120	
	369D/E/F/FF 500N	369D21220	6120	
	600N	369D21220	5400 (34)	
Link assembly - lead lag hub, main rotor	369D/E	369H1203-BSC (39) 369H1203-21 (39) 369H1203-31 (39) 369H1203-51 (39) 369H1203-53 (40) 369H1203-61 (39)	5762 5762 5762 11080 11080 11080	25 (23) 25 (23) 25 (11)
	369F/FF	369H1203-21 (39) 369H1203-31 (39) 369H1203-51 (39) 369H1203-53 (40) 369H1203-61 (39)	5762 5762 11080 11080 11080	25 (23) 25 (11)
	500N	369H1203-51 (39) 369H1203-53 (40) 369H1203-61 (39)	11080 11080 11080	
	600N	369H1203-51 (39) 369H1203-53 (40)	11080 11080	
Lead lag damper - main rotor	369D	369D21400-501 M50452	6060 On Cond.	 (16)
	369D/E/F/FF 500/600N	369D21400-503	On Cond.	(16)
Drive shaft, main rotor	369D/E	369D25510	5020	300 (8)
	369F/FF	369D25510	3675	300 (8)
	500N	369D25510-21	3260	300 (15)
	369D/E	369F5510	5020	
	369F/FF	369F5510	3675	
	500N	369F5510	3260	
	600N	600N5510	14000 (35)	
Mast assembly, main rotor	369D/E/F/FF 500N	369D22014	10450	
	600N	369D22014	3500	

Table 1. Airworthiness Limitations Schedule (Cont.)

Component (1)	Model	Part Number (2)	Finite Life Hours (1)	Mandatory Inspection Hours
Drive Shafts, Couplings and Clutches				
Drive shaft, main rotor transmission	369D/E/F	369A5510	3790	
Coupling, main transmission drive shaft	369D/E/F/FF	369H5660	4300	
	500N	369H5660	3200	
Overrunning clutch assembly	369D/E/F/FF 500/600N	369F5450-501	On Cond.	100 (24)
Sprag assembly, overrunning clutch	369D/E/F/FF	369A5364 369D25351	(3)	300 (10)
	500N	369D25351	(3)	300 (10)
	369D/E/F/FF 500/600N	369F5456	(3)	300 (17)
Drive shaft, fan	500N	500N5200	2620	
	600N	500N5200	1200 (36)	
Drive shaft, tail rotor	369D/E	369D25518	13900	
	369F/FF	369DSK152-11 369D25518-503	13900 14610	
Coupling - tail rotor drive shaft (Bendix) (**NOTE**: Not certified on 369FF Model) (9)	369D/E/F	369A5501 369H92564 (7)	4980 4980	
Anti-Torque System				
Gearshaft assembly, tail rotor input	369D/E	369D25434	12000	
	369F/FF	369D25434	3365	
Gearshaft, tail rotor output pinion	369D/E/F/FF	369D25430	7290	
Blade assembly, tail rotor	369D/E	369D21613 369D21613-11 369D21613-31 369D21613-41 369D21613-51 369D21613-61 369D21613-71 369D21640-501 (38) 369D21640-503 (38) 369D21640-505 (38)	5200 5140 5140 5140 5140 5140 5140 400 5140 5140	
	369F/FF	369D21606 369D21642-501 (38) 369D21642-503 (38) 369D21642-505 (38)	5140 400 5140 5140	
Blade assembly, tail rotor (optional 4-blade)	369D/E	369D21615 369D21641-501 (38) 369D21641-503 (38) 369D21641-505 (38)	10000 400 10000 10000	
Hub, tail rotor	369D/E/F/FF	369A1725	3450	

Table 1. Airworthiness Limitations Schedule (Cont.)

Component (1)	Model	Part Number (2)	Finite Life Hours (1)	Mandatory Inspection Hours
Retention strap assembly, tail rotor	369D/E/F	369A1706	5100	
	369FF	369A1706-507	5100	
		369A1706-509	5100	
Blade assembly, NOTAR fan	500N	500N5310-15	7500	
		500N5310-19	7500	
	600N	500N5310-19	12500	
Hub, fan	500N	500N5352-7	7500	
		500N5352-9	7500	
	600N	500N5352-9	7500	
Shaft, NOTAR fan support	600N	500N5357-13	4000	
Pitch plate assembly	500/600N	500N5363-7	7500	
Tube assembly, fan pitch	500N	500N7113-3	600 (18)	
Rotating cone assembly	500N	500N3740-1	10000	
		500N3740-41	10000	
	600N	500N3740-61	10000	
Tailboom				
Bolts, tailboom attach	369D/E/F/FF	MS21250-06014	21950	
Tailboom assembly	369D/E	369D23500	10300	
	369F/FF	369D23500-507	10300	
	500N	500N3500-19	10000	100 (14)
		500N3500-29	10000	
		500N3500-501	10000	
		500N3600-501	10000	100 (14)
	600N	600N3500-503	2500 (25)	
		600N3500-505	5900	
		600N3500-507	1000	
		600N3500-509	6000 (19)	
		600N3500-51 1	6000 (19)	
		600N3500-513	2500 (25)	
		600N3500-515	5900	
		600N3500-517	1000	
Empennage fittings	600N	500N3530-7/8	On Cond.	100 (26)
		500N3530-9/10	On Cond.	100 (26)
Vertical stabilizer assembly	369D/E	369D23600	12700	
	369F/FF	369D23600-505	3388	
Torque tube, horizontal stabilizer	500N	500N3950-5	5000	
	600N	500N3950-7	3000	
		600N3950	1000 (19)	

Table 1. Airworthiness Limitations Schedule (Cont.)

Component (1)	Model	Part Number (2)	Finite Life Hours (1)	Mandatory Inspection Hours
Horizontal stabilizer assembly	369D (12)	369D23601	7700	
	369E (12)	421-087-505 421-087-905 (13)	7700 7700	
	369F/FF (12)	421-087-503 421-087-903	7700 7700	
	600N	500N3910-25 500N3910-27	10000 (19) 10000 (19)	
Controls				
Longitudinal idler bellcrank assembly	369D	369A7301 369A7301-501	6500 6500	
	369E/F/FF	369A7301-501	6500	
	500N	369A7301-501	2870	
Idler assembly, longitudinal pitch mixer	369D/E/F/FF	369A7603	13600	
	500N	369A7603	6050	
Longitudinal control rod	500N	369A7011-13 369A7011-15	7740 7740	
Socket, cyclic stick	600N	369A7141	1000	8 (27)
Cyclic tube assembly	600N	369D27132-503	1200	8 (27)
Housing, collective stick	600N	369A7347	450	
Tube, collective pitch control	600N	369A7348	400	
Tube assembly, collective pitch (pilot)	600N	369H7354-3	600	
Socket, cyclic stick	600N	369A7802	1000	8 (27)
Tube, collective pitch (co-pilot)	600N	369A7809	1800	
Housing, collective stick	600N	369A7820	450	
Housing, collective stick	600N	369H7837	450	
Tube assembly, collective pitch (co-pilot)	600N	369H7838-3	1000	
Fuselage Sta. 75 controls support bracket	600N	369N2608-11 600N2608-9	6000 (41) Unlimited	
Airframe				
Landing gear brace	600N	600N6010-17/19	5900 (28)	
Landing gear strut	600N	600N6022-7/8	696 (29)	
Landing gear foot	600N	600N6043-3	3900 (30)	
Floats				
Squib cartridge, used on Emergency float kit 369D292473-5, -6, -9, -10, -11, -12 **NOTE:** Life is based from original date of manufacture.	369D/E/F/FF 500N	12552-1 (Holex, Inc.) 281993 (Walter Kidde) 12754-1 (Holex, Inc.) 5003527 (Tavco)	5 years 5 years 5 years 5 years	

Table 1. Airworthiness Limitations Schedule (Cont.)

Component (1)	Model	Part Number (2)	Finite Life Hours (1)	Mandatory Inspection Hours
Stabilizer support, utility float	369D/E	369D292036 369DSK66	3190 3190	

NOTES:

(1) Life-limited components interchanged between models or configurations must be restricted to the lowest service life indicated for the models or configurations affected. Life-limited components removed at retirement are to be mutilated/destroyed or conspicuously marked to prevent inadvertent return to service. Parts are applicable only on models under which a service life is listed.
Life-limited components cannot be altered or permanently marked in any manner without compromising the part integrity. Part tagging or other record keeping system is required.
Related component records must be updated each time component is removed from service.

(2) Service life shown for the basic (no dash number) part numbers apply to all dash numbered versions unless otherwise indicated.

(3) With no cargo hook attached: - No retirement life assigned (Ref. Sec. 05-10-00, Component Overhaul or Recommended Replacement Schedule).
With cargo hook attached and no separate log: - 1800 hours.
With cargo hook attached and with separate log: - 1800 hours of external load operating time when logged separately.
(For 369D/E/F/FF helicopters with 369A5364 or 369D25351 sprag assembly, Refer to AD 90-19-02.)

(4) Inspect in accordance with Main Rotor Strap Pack Lamination Inspection at 100-hour intervals, or 25-hour intervals if 2 laminates (369D/E/F/FF - 500N) or 1 laminate (600N) have failed in any one leg or tongue area of any strap assembly. A single cracked laminate between the shoes at the outboard end of a strap pack is cause for rejection of the hub assembly
369D/E/F/FF - 500N: (Ref. Sec. 62-20-00, Main Rotor Strap Pack Lamination Inspection).
600N: (Ref. Sec. 62-20-60, Main Rotor Strap Pack Lamination Inspection).
(For 369D/E/F/FF helicopters, refer to AD 89-02-01.)

(5) The 369D21100-513, -515, 516, 517 and -523 main rotor blades are not interchangeable with any earlier configuration blades (Basic, -505 or -509); however, the -505 and -509 blades are interchangeable and the -513 and -515 blades are interchangeable. The -505 and -509 configuration blades may be modified to the -513M configuration, which is fully compatible with the -513 blade. (For information concerning modification, contact MDHI Customer Service Department.)

(6) For the 369D/E helicopters, the 369D21120-501, -503 main rotor blade has all the same inspections and interchangeability as the 369D21100-517 main rotor blade.
For the 369F/FF - 500N helicopters, the 369D21121-501, -503 main rotor blade has all the same inspections and interchangeability as the 369D21102-517 main rotor blade.
For the 600N helicopters, the 369D21121-501, -503 main rotor blade has all the same inspections and interchangeability as the 369D21102-523 main rotor blade.

(7) Used with 369H90123 Rotor Brake Kit.

(8) Inspect main rotor drive shaft every 300 hours (Ref. Sec. 63-10-00, Main Rotor Drive Shaft Inspection (300 Hour)) (Reference AD 81-26-01).

(9) Failsafe device, P/N 369D25530 bolt and 369D25531 socket, must be used at both ends of tail rotor driveshaft in accordance with Tail Rotor Drive Shaft Installation with Bendix Couplings (Reference AD 86-20-07).

(10) For helicopters equipped with a cargo hook, inspect overrunning clutch sprag assembly P/N 369D25351, clutch inner race P/N 369A5353 and outer race 369A5352 every 300 hours (Ref. C.O.M., Sec. 63-10-10, Overrunning Clutch Sprag Inspection (300 Hour)). To establish time in service, either clutch total time with hook attached or a separate and permanent log of external load operating time per CFR 91.417, may be used.
(For 369D/E/F/FF helicopters with 369A5364 or 369D25351 sprag assembly, Refer to AD 90-19-02.)

(11) Inspect main rotor blade root fittings and main rotor lead-lag link assemblies every 25 hours in accordance with Main Rotor Blade Upper and Lower Root Fitting Attach Lug and Lead-Lag Link Attach Lug Inspection (25 Hour) and every 100 hours in accordance with Main Rotor Blade Upper and Lower Root, Fitting Attach Lug and Lead-Lag Link Attach Lug Inspection (100 Hour) (Ref. Sec. 62-10-00) (Reference AD 95-03-13).

(12) Tip plates, tip weights (where applicable) and attaching hardware have no retirement life and may be reused on replacement horizontal stabilizers.

(13) 421-087-903 and -905 require addition of tip plates, tip weights and attaching hardware before installation.

(14) Inspect the three upper slot bridges for cracks (Ref. Sec. 05-20-00).

(15) Inspect main rotor drive shaft every 300 hours (Ref. Sec. 63-10-00, Main Rotor Drive Shaft Inspection (300 Hour)).

(16) Inspect for deterioration every 600 hours up to a total time of 4200 hours and every 300 hours thereafter until deterioration is sufficient to retire assembly
369D/E/FF - 500N: (Ref. Sec. 62-20-00, Main Rotor Damper and Attachments Inspection)
600N: (Ref. Sec. 62-20-60, Main Rotor Damper and Attachments Inspection).

(17) For helicopters equipped with a cargo hook, inspect overrunning clutch sprag assembly P/N 369F5456, clutch inner race P/N 369F5455 and outer race 369F5453 every 300 hours. To establish time in service, either clutch total time with hook attached or a separate and permanent log of external load operating time may be used.

(18) 500N7113-1 1 tube assembly, fan pitch is an On-Condition part and replaces the 500N7113-3 tube assembly.

(19) Interim hours: life extension testing in progress.

(20) Inspect upper and lower blade root fittings every 100 hours in accordance with Main Rotor Blade Upper and Lower Root, Fitting Attach Lug and Lead-Lag Link Attach Lug Inspection (100 Hour) (Ref. Sec. 62-10-00)
(For 369D/E/F/FF - 500N helicopters, Reference AD 96-10-09).

(21) Main rotor blades, P/N 369D21102-517 with S/N 1976 thru 2100, 2106 thru 2115 are not to be installed on 600N helicopter (Reference Service Bulletin SB600N-007R2) (Reference AD 98-15-26).

(22) Inspect main rotor blades with 600 or more hours of operation every 25 hours of helicopter operation with a 10X magnifying glass for cracking of the lower surface of the blade emanating from the root fitting and doubler at the inboard end of the blade and to detect debonding between the blade root end fitting and doubler if missing or cracked adhesive or paint is observed. (Reference Service Bulletins SB369D-195R3, SB369E-088R3, SB369F-075R3, SB500N-015R3) (Reference AD 98-15-26).

(23) Perform Main Rotor Blade Upper and Lower Root, Fitting Attach Lug and Lead-Lag Link Attach Lug Inspection (25 Hour) up to a total time of 500 hours and every 15 hours thereafter and every 100 hours in accordance with Main Rotor Blade Upper and Lower Root Fitting, Attach Lug and Lead-Lag Link Attach Lug Inspection (100 Hour) (Ref. Sec. 62-10-00) until retirement of 369H1203-BSC and -21 Lead-Lag Link Assembly. (Reference AD 95-03-13).

(24) Inspect clutch retainer and bearing carrier for evidence of spinning and/or wear (Ref. Sec. 05-20-20).

(25) The 600N3500-503 tailboom may be reworked to a 600N3500-505 tailboom, and the 600N3500-513 tailboom may be reworked to a 600N3500-515 tailboom by modifying the attachment fittings to all-steel fittings.

(26) (Ref. Sec. 05-20-00) Using a flashlight and 10X magnifying glass, inspect horizontal stabilizer mounting brackets for cracks (pay particular attention to the forward inboard legs) (Ref. Tailboom Inspection).

(27) Sockets must be inspected for cracks every eight hours after the initial 100 hour inspection.

(28) Log all landings: Brace life is limited to 35400 logged landings or 5900 hours flight time if landing are not logged (assumed six landings per one hour of flight time).

(29) Log all landings: Strut life is limited to 4170 logged landings or 696 hours flight time if landing are not logged (assumed six landings per one hour of flight time).

(30) Log all landings: Foot life is limited to 23780 logged landings or 3900 hours flight time if landing are not logged (assumed six landings per one hour of flight time).

(31) The following main rotor blades have a finite life of 2,500 hours or 15,000 torque events*, whichever occurs first;
P/N 369D21100-517 with S/N H664, H665, H667, H669, H671, H672, H674, H676, H679, H680, H683 thru H724, H726 thru H999 and J000 thru J039, J041 thru J055 and
P/N 369D21102-517 with S/N 1976 thru 2100, 2106 thru 2115.
* TORQUE EVENT (TE) - A TE is recorded for every transition from forward flight to a hover (Reference Service Bulletins SB369D-195R3, SB369E-088R3, SB369F-075R3, SB500N-015R3).

(32) RIN = (200 x Hrs.) + (52 x TE).

(33) RIN = (160 x Hrs.) + (24 x TE).

(34) RIN = (153 x Hrs.) + (3 x TE).

(35) RIN = (50 x Hrs.) + (3 x TE).

(36) RIN = (768 x Hrs.) + (11 x TE).

(37) After accumulation of 750 flight hours and 13,720 TE, perform Main Rotor Blade Torque Event Inspection (Ref. Sec. 62-10-00) every 35 flight hours or 200 TE's (whichever occurs first).

(38) The 369D21640-501, -503, -505 tail rotor blades are two-way interchangeable with the 369D21613 tail rotor blades in sets of two only.
The 369D21641-501, -503, -505 tail rotor blades are two-way interchangeable with the 369D21615 tail rotor blades in sets of two only (installed on the same inboard or outboard hub).
The 369D21642-501, -503, -505 tail rotor blades are two-way interchangeable with the 369D21606 tail rotor blades in sets of two only.

(39) The 369H1203-BSC, -11, -21, -31, -51 and -61 lead lag link assemblies can only be installed using the 369H1235-BSC bearing.

(40) The 369H1203-53 lead lag link assembly can only be installed using the 369H1235-1 bearing.

(41) The 369N2608-11 Control Support Bracket must be removed from 600N helicopters equipped with YSAS (Ref. SB600N-040).

TABLE OF CONTENTS

Para/Figure/Table	Title	Page
05-00-00	**Continued Airworthiness**	**A**
	Checks/Inspections	**1**
1.	General Description of Inspections	1
	A. Airworthiness Limitations	1
	B. Continued Airworthiness	1
2.	Documentation	2
	A. Records of Aircraft Inspection	2
	B. Additional Documentation	2
3.	Visual Inspection Criteria	2
	A. General Visual Inspection	2
05-10-00	**Continued Airworthiness**	**A**
	Component Overhaul/Recommended Replacement	**1**
1.	Component Overhaul or Recommended Replacement Schedule	1
	Table 1. Component Overhaul Schedule	1
	Table 2. Component Recommended Replacement Schedule	3
05-20-00	**Continued Airworthiness**	**A**
	100-Hour or Annual Inspection Checklist	**1**
1.	100–Hour or Annual Inspection	1
	Table 1. 100–Hour or Annual Inspection	1
2.	Retirement Index Numbers Attachment	11
	Table 2. Permanent Record of Retirement Index Numbers/Torque Events	11
05-20-10	**Continued Airworthiness**	**A**
	300-Hour Inspection Checklist	**1**
1.	300–Hour Inspection	1
	Table 1. 300–Hour Inspection	1
05-20-15	**Continued Airworthiness**	**A**
	Yearly Inspection Checklist	**1**
1.	Yearly Inspection	1
	Table 1. Yearly Inspection	1
05-20-20	**Continued Airworthiness**	**A**
	Special Inspections	**1**
1.	Special Inspection Hourly and Calendar	1
	Table 1. Special Inspections Hourly	1
	Table 2. Special Inspections Calendar	5

TABLE OF CONTENTS (Cont.)

Para/Figure/Table	Title	Page
05-50-00	**Continued Airworthiness**	**A**
	Conditional Inspections	**1**
1.	Conditional Inspections	1
	Table 1. Conditional Inspections	1

CONTINUED AIRWORTHINESS CHECKS/INSPECTIONS

1. General Description of Inspections

The following Continued Airworthiness Sections specify inspections and other maintenance required under the Federal Aviation Regulations unless an alternative program has been FAA approved.

NOTE: Because this manual pertains to MDHI model 369D, 369E, 369FF, 500N and 600N helicopters (including the basic 500MD configuration), it may contain inspection requirements applicable to specific equipment not installed on individual helicopters. When this situation is encountered, requirements that are not applicable should be disregarded.

The inspection intervals designated herein are the maximum allowable and should not be exceeded. When unusual local conditions, such as environmental conditions, utilization, etc. dictate, it is the prerogative and responsibility of the operator to increase the scope and frequency of the inspections as necessary to ensure safe operation. Each item shall conform with the FAA Requirements, A.D.'s and Manufacturer Bulletins and Letters. Over flying the inspection interval, or any change desired to the requirements of this chapter, may be requested through the local aviation regulatory authority.

A. Airworthiness Limitations

Refer to section 04-00-00 for mandatory inspections and component mandatory retirement schedule.

B. Continued Airworthiness

This section contains the requirements for Component Overhaul/Recommended Replacement, 100-Hour or Annual Inspection Checklist, 300-Hour Inspection Checklist, Special Inspection Schedule and Conditional Inspections.

(1). **COMPONENT OVERHAUL/RECOMMENDED REPLACEMENT** (Ref. Sec. 05-10-00) is a schedule for the overhaul and recommended replacement of components and/or assemblies and scheduled maintenance checks.

(2). **100-HOUR OR ANNUAL INSPECTION CHECKLIST** (Ref. Sec. 05-20-00) is a schedule of inspections that must be accomplished every 100 hours of helicopter operation or on a 12-month (annual) basis.
An Annual Inspection is required on this helicopter for continued airworthiness and may be accomplished in combination with a 100-hour inspection.

NOTE:

- To comply with the requirements of service bulletins which have been incorporated into the appropriate maintenance and inspection manuals, the latest 100-Hour or Annual Inspection must be used.
- Refer to applicable Rolls- Royce Engine Operation and Maintenance Manual (Ref. Table 201, 01-00-00) for detailed requirements on inspection of the engine.

(3). **300-HOUR INSPECTION CHECKLIST** (Ref. Sec. 05-20-10) is a schedule of inspections that must be accomplished every 300 hours of helicopter operation.

(4). **YEARLY INSPECTION CHECKLIST** (Ref. Sec. 05-20-15) is a schedule of inspections that must be accomplished on a yearly basis.

(5). **SPECIAL INSPECTIONS** (Ref. Sec. 05-20-20) consist of inspections that are contingent upon elapsed flight time or calendar time.

(a). **Special Inspections Hourly** should be referred to for additional inspection requirements that must be performed at specified periodic hourly intervals.

(b). **Special Inspections Calendar** should be referred to for additional inspection requirements that must be performed at specified periodic calendar intervals.

(6). **CONDITIONAL INSPECTIONS** (Ref. Sec. 05-50-00) includes inspection requirements for unusual or other specific conditions or circumstances that might occur.

2. Documentation

A. Records of Aircraft Inspection

(1). Aviation regulatory agencies require pilot's, mechanics, owners and operators to be familiar with, and to maintain records of aircraft maintenance, inspections and repairs. This includes, but is not limited to, Airworthiness Directives, Manufacturers Notices, Scheduled Inspections and Time/Cycle limited-life components.

B. Additional Documentation

(1). Additional documentation is required to be available, or inside the aircraft, during operation. This documentation includes: Airworthiness and Registration Certificates, Rotorcraft Flight Manual, Weight and Balance information and Radio Permits. It is important that all required documentation be reviewed and revised as necessary during regular inspections, maintenance and operation of the helicopter.

3. Visual Inspection Criteria

Any time an area of the helicopter is visible during an inspection or maintenance action, the following "Visual Inspection Criteria" shall be accomplished without requiring disassembly or removal of adjacent equipment unless otherwise specified. It will normally apply to those areas, surfaces, or items which become visible by the removal or opening of access doors, panels, fairings, or cowlings. It shall include a visual examination of the area, component, detail, assembly, or installation and its surrounding environment, as well as any associated equipment within the immediate vicinity, using any inspection aids considered necessary.

A. General Visual Inspection

A visual inspection that will detect obvious unsatisfactory conditions/discrepancies. This type of inspection may require cleaning, removal of fillets, fairings, access panels/doors, etc.

(1). Metal parts (all metal parts, bodies, or casings of units in systems and in electrical, instrument, and radio installations, ducting, tubing, rods, and bellcranks). Inspect for the following:

(a). Cleanliness, external signs of damage, leaks, overheating, discharge, or fluid contamination.

(b). Obstruction of drainage or vent holes.

(c). Correct seating and sealing of fairings and serviceability of fasteners.

(d). Security of attachment, fasteners, and connections.

(e). Distortion, dents, scores, chafing, pulled or missing fasteners, rivets, bolts, or screws.

(f). Signs of cracks or wear.

(g). Separation of bond.

(h). Failure of welds or spot welds.

(i). Deterioration of protective treatment and corrosion.

(2). Composite, rubber, fabric, fiberglass, and plastic parts (coverings, ducting, flexible hoses, flexible mountings, seals, insulation of electrical cables, windows, etc.). Inspect for the following:

(a). Cleanliness, cracks, cuts, chafing, kinking, twisting, crushing, or contraction -(sufficient free length).

(b). Damage, delamination, or deterioration.

(c). Crazing.

(d). Loss of flexibility (other than fabric covered component).

(e). Overheating.

(f). Fluid saturation.

(3). Control System Components. Inspect for the following:

(a). Correct alignment, no binding.

(b). Distortion, signs of bowing, scoring, chafing, fraying, kinking, signs of wear, flattening, cracks, or loose fasteners.

(c). Deterioration of protective treatment or corrosion.

(d). Electrical bonding correctly positioned, undamaged, and secure.

(e). Attachments, end connections, and locking devices secure.

(4). Electrical components (circuit protection devices, wiring, connectors, plugs, motors, generators, actuators, relays, solenoids, and contacts). Inspect for the following:

(a). Cleanliness, obvious damage, corrosion, security of attachments and connections.

(b). If protective covers are required to be removed, check for cleanliness, scoring, pitting or burning of contacts, brushes for condition, and security of exposed contacts.

(c). Overheating.

(d). Fluid contamination.

NOTE: For detailed Wiring Inspection criteria, refer to CSP-HMI-3, Section 96-00-00.

(5). Wire harness. Inspect for the following:

(a). Routing, contact with structure, proper support and protection.

(b). Strain at termination points, free movement of shock-mounted or hinged equipment and proper slack for equipment installation and maintenance.

(6). Inside fuel cell areas. Inspect for the following:

(a). Leaks, cleanliness, foreign objects, cracks.

(b). Components for security and general condition.

(c). Plumbing, and wiring for security, and general condition.

(7). Markings, labels, and placards. Inspect for the following:

(a). Legibility and security of attachment.

This Page Intentionally Left Blank

CONTINUED AIRWORTHINESS
300-HOUR INSPECTION CHECKLIST

1. 300-Hour Inspection

This check sheet is designed to be used when performing scheduled inspections as defined under FAR Part 91. This checklist, when completed, should be kept as a permanent part of the helicopter's records. Adherence to Maintenance Manual information is required, and the manual should be consulted when using the checklist.

NOTE:

- The Chap/Sect column of the following table is for reference unless a specific inspection requirement is called out. If there is only two numbers in the column, it refers to the Chapter. If there is three numbers, it refers to the Section the inspection is found.
- Refer to applicable Rolls-Royce engine inspection check list for required engine maintenance.

Table 1. 300-Hour Inspection

Registration No._____**Serial No.**_____**Helicopter Hours**_____

Model	Requirement	Chap/Sect	Initial
	EXTERIOR		
ALL	Retorque tailboom attachment bolts.	53	
500/600N	Remove rotating cone and tip cap (500N) and inspect: * Cables, cable ends and pulleys for condition and security. Perform Forward and Center Cable Assembly Inspection and Sector Assembly and Control Cable Inspection (Ref. Sec. 67-20-30). * Aft cable ends and turnbuckles for condition and security. Evidence of corrosion pitting requires replacement. * Cone rollers for condition and security. * Four fasteners that attach 500N3760-1 upper input shaft to the stationary thruster for play (replace pins and collars if any play is found). * Three fasteners that attach 500N3759 support shaft assembly for play (if play is found in top bolt, retorque to **10 - 15 inch-pounds (1.13 - 1.69 Nm)**. Replace pins and collars if any play is found in bottom fasteners). Reinstall rotating cone and tip cap (500N).	53	
369D/E/FF	Remove engine inlet bypass door and check latches, hinges and hardware for wear and security. Remove and replace the latch retention cotter pin (located inside the attach "U" clamp) (Ref. Engine Air Inlet Bypass Door 300-Hour Inspection).	71-10-10	
369D/E/FF	Check horizontal and vertical stabilizer attach bolts for proper torque (Ref. Horizontal Stabilizer Tip Plate Installation and Vertical Stabilizer Installation).	53-50-10	
369D/E/FF	Check lower surface of horizontal stabilizer for drain holes. Also check for gaps between upper and lower doublers and stabilizer skin (Ref. Horizontal Stabilizer and Tip Plates Inspection).	53-50-10	
500/600N	Control tubes and bellcranks in horizontal stabilizer for condition and security.	53	

Table 1. 300-Hour Inspection (Cont.)

Registration No._____ Serial No._____ Helicopter Hours_____			
Model	**Requirement**	**Chap/Sect**	**Initial**
500/600N	Inspect S.A.S. system for: * Actuator for security and damage (no damage allowed). * Wiring for condition and security (no wire chaffing, fraying or insulation cracking allowed). * Actuator mounting bracket for cracks, pay particular attention to area around four rivet attach holes (no cracks allowed). * Rate gyro and control box for security in mount and electrical connector secure. Inspect mount for security and condition (no corrosion or cracks allowed).	67	
LANDING GEAR			
ALL	Perform Landing Gear Inspection.	32-10-00	
ALL	Perform Cabin Entry Step Inspection.	32-10-00	
CABIN			
ALL	Remove instrument console base covers and inspect anti-torque pedal crossover torque tube and bellcrank for cracks, damage and security.	67	
ALL	Push-pull rods for excessive bearing play, wear and security.	67	
ALL	Perform Tunnel-Routed Control Rod Inspection.	67-10-00	
ALL	Check oil tank for security and evidence of leakage and damage.	79	
MAIN ROTOR			
ALL	Perform Swashplate Inspection.	62	
ALL	Perform Lead-Lag Bolt Inspection.	62	
ALL	Perform Main Rotor Hub Droop Angle Check.	62	
ALL	Perform Main Rotor Blade Inspection.	62	
ALL	Inspect main rotor mast, mast base and mast base support structure for evidence of cracks. Check with bright light and 5X magnifying glass. Visually check mast support bolts for security and condition. Inspect internal bore for chipping, orange peeling or flaking paint (Ref. Main Rotor Static Mast Inspection and Repair).	63-30-00	
ALL	Inspect hoisting eye-bolts for cracks or corrosion.	63	
369D/E/FF 500N	369D25510 drive shaft only, perform Main Rotor Drive Shaft Inspection (300-Hour).	63-10-00	
DRIVE TRAIN			
ALL	Remove, inspect and clean main transmission chip detectors.	63	
369D/E/FF 500N	369A5350 Overrunning Clutch: Perform Ball Bearing Inspection and Grease Repack (300 Hour).	COM	
ALL	369F5450 Overrunning Clutch: Perform Ball Bearing Grease Repack (300 Hour).	COM	
369D/E/FF	Remove tail rotor drive shaft and check boom fairing and tail boom for buckles, dents, bulkhead chafing and obvious damage.	53	
369D/E/FF	Remove tailboom control rod and inspect for wear though hard anodized surface (Ref. Tailboom Control Rod Replacement); inspect grommets for wear and deterioration.	67-20-10	

Table 1. 300-Hour Inspection (Cont.)

Registration No._____ Serial No._____ Helicopter Hours_____			
Model	**Requirement**	**Chap/Sect**	**Initial**
369D/E/FF	Check shaft damper for proper friction drag. Inspect damper for damage and security (Ref. Tail Rotor Drive Shaft Damper Inspection).	63-15-10	
369D/E	Check forward and aft coupling bolt and socket for indication of contact, Bendix couplings only (Ref. Tail Rotor Drive Shaft Inspection).	63-15-10	
ANTI-T ORQUE			
Tail Rotor System			
369D/E/FF	Remove, inspect and clean chip detectors.	63	
369D/E/FF	Check for contact between tail rotor bellcrank and tail rotor transmission housing at extreme right pedal travel.	67	
369D/E/FF	Tail rotor assembly: Elastomeric teeter bearings for wear; bond between concentric metal cones and elastomer rings of bearing assembly (Ref. Elastomeric Bearing Inspection).	64-20-00	
369D/E/FF	Remove blade stop for thorough inspection; in particular, check for cracks or splits in stem area (Ref. Tail Rotor Blade Stop Inspection).	64-30-00	
NOTAR® Anti-Torque System			
500/600N	Check balance weights for security. If any balance weight stud is found to be loose, perform Fan Balance Stud Replacement.	64	
500/600N	Remove, inspect and clean fan transmission chip detector.	63	
500/600N	Remove tailboom: Perform visual inspection of fan assembly for: * Cracks, nicks or corrosion. * Blades for cracks, nicks or impact damage. * Check pitch horn counterweights for security. If counterweight(s) are found loose, perform Pitch Horn Counterweight Set Screw Replacement (Ref. Sec. 64-25-30). **NOTE:** Access the forward counterweights through the fan inlet (fan hub fairing must be removed). * Gap between fan blade and tip seal and gap between fan blade and hub (inboard end of the blade). If any of these gaps for any blade exceeds the average gap of the other blades by more than 0.10 inch (2.54 mm)., remove and inspect the tension-torsion strap for that blade. * Fan liner for cracks, debonding or corrosion of liner material. * P-seal for tears, deterioration and debonding. Reinstall tailboom (on 600N only, install new tailboom mounting bolts).	53 64	
ELECTRICAL			
NOTE: When possible, use auxiliary power source during **POWER ON** inspection, not battery.			
ALL	Perform Battery Temperature Sensing Switches Testing.	96	
369D/E/FF 500N	Check TOT indicating system for proper calibration (Ref. TOT Indicating System Calibration).	95-30-00	

Table 1. 300-Hour Inspection (Cont.)

Registration No._____ Serial No._____ Helicopter Hours_____			
Model	**Requirement**	**Chap/Sect**	**Initial**
	ENGINE COMPARTMENT		
ALL	Inspect starter/generator for: * Condition of brushes, electrical connections and commutator. * Screens for clogging. * Condition of O-ring on drive spline. * Damper backplate and clutch for condition.	96	
ALL	Perform Fuel Filter (Bypass) Caution Light Pressure Switch Test.	28-00-00 28-00-60	
NOTE: Also, perform this operational check whenever low pressure fuel pump filter element is replaced for any reason, or if contaminated.			

Table 2. Special Inspections Calendar

Model	What to Inspect	Section
(DAILY) BEFORE FINAL SHUTDOWN IN CORROSIVE ENVIRONMENT		
ALL	It is recommended that before shutdown from the last flight of the day, for helicopters operating in a corrosive environment, a Tri-Flow wash be preformed on the main rotor hub and strap pack assembly (Ref. Main Rotor Hub Corrosion Prevention (Tri-Flow Wash Procedure)).	20-40-00
(DAILY) AFTER FINAL SHUTDOWN IN CORROSIVE ENVIRONMENT		
500N	It is recommended that after shutdown from the last flight of the day, for helicopters operating in a corrosive environment, the splitter bungee spring be sprayed with Tri-Flow .	20
EVERY 6 MONTHS OR 5 INFLATIONS		
ALL	Inflate emergency floats to 4.5 psi (0.3164 kg/cm^2) for one hour. Check for leaks and condition. Continue inflation to 5.5 psi (0.3867 kg/cm^2) and check that chamber pressure relief valves operate. Pressure-test float compartments (Ref. Float Compartments Pressure Test).	32-82-00
AFTER COMPRESSOR WATER WASH/RINSE WITH PARTICLE SEPARATOR INSTALLED		
ALL	During engine run after compressor water wash with particle separator installed, it is recommended that scavenge air switch be switched on to remove any moisture that has accumulated in the solenoid air valve.	RFM
BEFORE OPERATION OF BREEZE HOIST SYSTEM		
ALL	Prior to daily hoisting operations: unreel and inspect entire length of hoist cable for broken strands (cluster of 7 wires), excessive broken wires, corrosion, and security of attachment to cable drums and swivel hook. Replace cable if broken strand or excessive broken wires are noted. (Refer to hoist manufacturer's handbook, Table 201.)	01
AFTER FIRST FLIGHT WITH NEW EXHAUST GASKET INSTALLED		
369FF/600N	Exhaust bolts should be retorqued after first flight. If bolts are found to be loose, retorque after every flight until bolts retain torque.	78-30-00

This Page Intentionally Left Blank

TABLE OF CONTENTS

Para/Figure/Table	Title	Page
20-10-00	**Torque**	**A**
	Maintenance Practices	**201**
1.	Torque Wrenches	201
2.	Application of Torque Wrench Loads	201
3.	Bearings Installation, Staking or Swaging Force	201
4.	Control Tube Jam Nut Torquing	202
5.	Standard Hardware Torque Values	202
	Table 201. Recommended Standard Torques for Tension-Type Fasteners	203
	Table 202. Recommended Standard Torques for Shear-Type Fasteners	204
	Table 203. Locking (Drag) Torque for Self-Locking Fasteners	205
20-20-00	**Cleaning**	**A**
	Maintenance Practices	**201**
1.	Cleaning	201
2.	Fuselage Interior Trim and Upholstery Cleaning	201
3.	Airframe Exterior and Rotor Blades Cleaning	201
4.	Transparent Plastic Cleaning	201
5.	Engine Compressor Contamination Removal	202
6.	Cleaning Of Engine Air Inlet Screens	202
20-30-00	**Painting**	**A**
	Maintenance Practices	**201**
1.	Paint Finish	201
2.	Paint Removal	201
3.	Paint Touchup	201
	A. Touchup – Small Sanded Areas	201
	B. Touchup – Flaking or Dried Paint or Primer	201
	C. Touchup – Primer Not Adhering to Metal Finish	201
	D. Touchup – Glass Fiber Laminate Parts	202
	E. Touchup – Polycarbonate Plastic Parts	202
	F. Touchup – ABS Thermoplastic Parts	202
4.	Main Rotor Blade Paint	203
	A. Main Rotor Blade Paint Removal	203
	B. Main Rotor Blade Paint Application	203
5.	Tail Rotor Blade Paint	204
	A. Tail Rotor Blade Paint Removal	204
	B. Tail Rotor Blade Paint Application	204
20-40-00	**Corrosion Prevention**	**A**
	Maintenance Practices	**201**
1.	Corrosion Control	201

TABLE OF CONTENTS (Cont.)

Para/Figure/Table	Title	Page
2.	Magnesium Alloys – Insulation Against Corrosion	201
3.	Sealing Compound Application	201
4.	Main Rotor Hub Corrosion Prevention (Tri–Flow Wash Procedure)	201
5.	Main Rotor Blades Corrosion Arresting	202
A.	Main Rotor Blade and Damper Attach Pins – Corrosion Prevention	202
6.	Magnesium Alloy Exterior Surface Touchup Treatment	203
7.	Aluminum Alloy Exterior Surface Touchup Treatment	203
8.	Steel Alloy Exterior Surface Touchup Treatment	203
9.	Splitter Bungee Spring Corrosion Control (500N)	204
	Table 201. Anti–Corrosion Chemical Finishes – Aluminum	204
20-90-00 Nondestructive Inspection		**A**
Maintenance Practices		**201**
1.	Nondestructive Inspection Methods	201
A.	Visual Inspection	201
	Figure 201. Visual Inspection Technique	201
B.	Dye Penetrant Inspection	202
C.	Coin Tap Inspection	202
D.	Fluorescent Penetrant Inspection	202
E.	Magnetic Particle Inspection	202
F.	Eddy–current Inspection	202
	Figure 202. Coin Tap Inspection	203

TORQUE
MAINTENANCE PRACTICES

1. Torque Wrenches

Torque wrenches should be of good quality and calibration should be verified at regular intervals to verify accuracy. Torque wrench accuracy at room temperature, 70°F (22 °C) must be within following limits.

(1). From zero through 19 percent of torque wrench range, error may not exceed ±7 percent of load applied.

(2). From 20 thru 79 percent of torque wrench range, error may not exceed ±4 percent load applied.

(3). From 80 to 100 percent of torque wrench range, error may not exceed ±5 percent of load applied.

2. Application of Torque Wrench Loads

(Ref. Table 201 thru Table 203) Recommended tightening torque values and minimum drag torque values for fine and coarse thread nuts, and minimum breakaway torque for used self-locking bolts or screws are listed in Table 201 and Table 202. Requirements governing application of torque loads follow. These requirements apply throughout this manual except where otherwise specifically indicated.

(1). Values apply to cadmium-plated bolts, cadmium-plated nuts coated with molybdenum disulfide (MoS_2).

(2). Manufacturer applied lubricant must not be removed nor additional lubricant added.

(3). Bolts, nuts and surfaces they bear on must be clean, dry and free of lubricant except as stated in requirement above.

(4). Turning (drag) torque required to install self-locking nut or bolt up to point of final tightening must always be added to final torque value specified or the maintenance instruction, as applicable.

(5). Torque values specified in this manual are special torque values that apply instead of those listed.

(6). If adapters are used such that adapter and torque wrench are not at right angles (90 degrees) to each other, wrench or indicator reading must be corrected.

(7). Any reuse of self-locking nuts over 3/8 inch is governed by values listed in Table 203.

(8). Castellated nuts aretorqued to the minimum side of the recommended torque range. Continue to tighten the nut until the hole of the cotter pin lines up with the castellation without exceeding the maximum specified torque.

(9). Bolt must not be rotated during application of torque to mating nut.

3. Bearings Installation, Staking or Swaging Force

The following procedure explains how to convert from a given ‘Force‘ which is required to perform a task to a proper hydraulic pressure reading.

(1). Determine the diameter of the ram (staking or swaging contact surface) on the hydraulic press to be used.

NOTE: The hydraulic press to be used must have a pressure gauge.

(2). Divide the ram diameter by two to get the radius.

(3). Multiply 3.14159 (pi) times the Radius squared (R^2). This will give the area of the ram.

(4). Divide the force required for the task by the area of the ram. This gives the actual PSI reading for the hydraulic press pressure gauge needed to perform the task.

EXAMPLE:

Ram Diameter = 2.65 in. (6.731 cm)

Ram Radius (R) = 1.325 in. (3.366 cm)

Radius squared (R^2) = 1.756 in.^{2} (8.548 cm^2)

R^2 X 3.1416 = 5.517 in. (26.854 cm) (Area of ram)

Force required = 7500-8500 lbs. (3402-3856 kg) (variable)

7500-8500 lbs. (3402-3856 kg) / 5.517 in. (26.854 cm) = 1359-1540 PSI (9370-10618 kPa)

PSI required =1359 PSI (9370 kPa) Min. 1540 PSI (10618 kPa) Max.

Force needed/(R^2) X 3.1416 = Pressure Gauge Reading

4. Control Tube Jam Nut Torquing

(1). Tighten jam nuts against control rods by holding rod end with wrench.

NOTE: Do not tighten with rod end against fitting.

(2). Ensure rod ends are not preloaded after torquing jam nuts.

5. Standard Hardware Torque Values

The following tables list torque values for standard hardware by part number.

NOTE: If unsure of hardware type, refer to CSP-IPC-4.

(1). Table 201 lists self-locking tension-type fastener torque values.

(2). Table 202 lists shear-type fastener torque values.

(3). Table 203 lists maximum and minimum self-locking fastener drag (run-on) torque values.

CAUTION Table 203 lists self-locking (run-on) torque values, i.e.; torque required to overcome the friction of the self-locking feature of fastener threads prior to clamp-up and final tightening. Any self-locking fastener that can be run down with the fingers after the locking feature engages must be replaced. Determine final torque value by adding the run-on torque to the specified final clamping torque. Final clamping torque values are listed in Table 201 and Table 202.

Table 201. Recommended Standard Torques for Tension-Type Fasteners

Diameter inch (mm)	Thread Size (Fine)	Recommended Torque in. lb (Nm)	Maximum Allowable in. lb (Nm)	Thread Size (Coarse)	Recommended Torque in. lb (Nm)	Maximum Allowable in. lb (Nm)
0.1640 (4.1656)	8 - 36	12 - 15 (1.13 - 1.36)	20 (2.26)	8 - 32	12 - 15 (1.36 - 1.69)	20 (2.26)
0.1900 (4.8260)	10 - 32	20 - 25 (2.26 - 2.82)	40 (4.52)	10 - 24	20 - 25 (2.26 - 2.82)	35 (3.95)
0.250 (6.350)	1/4 - 28	50 - 70 (5.65 - 7.91)	100 (11.30)	1/4 - 20	40 - 50 (4.52 - 5.65)	75 (8.47)
0.3125 (7.9375)	5/16 - 24	100 - 140 (11.30 - 15.82)	225 (25.42)	5/16 - 18	80 - 90 (9.04 - 10.17)	160 (18.08)
0.3750 (9.5250)	3/8 - 24	160 - 190 (18.08 - 21.47)	390 (44.06)	3/8 - 16	160 - 185 (18.08 - 20.90)	275 (31.07)
0.4375 (11.1125)	7/16 - 20	450 - 500 (50.84 - 56.49)	840 (94.91)	7/16 - 14	235 - 255 (26.55 - 28.81)	475 (53.67)
0.50 (12.70)	1/2 - 20	480 - 690 (54.23 - 77.96)	1100 (124.3)	1/2 - 13	400 - 480 (45.19 - 54.23)	880 (90.39)
0.5625 (14.2875)	9/16 - 18	800 - 1000 (90.39 - 112.98)	1600 (180.8)	9/16 - 12	500 - 700 (56.49 - 79.09)	1100 (124.3)
0.6250 (15.8750)	5/8 - 18	1100 - 1300 (124.3 - 146.9)	2400 (271.2)	5/8 - 11	700 - 900 (79.09 - 101.69)	1500 (169.5)
0.750 (19.050)	3/4 - 16	2300 - 2500 (259.9 - 282.5)	5000 (565.0)	3/4 - 10	1150 - 1600 (129.95 - 180.8)	2500 (282.5)
0.8750 (22.2250)	7/8 - 14	2500 - 3000 (282.5 - 339.0)	7000 (791.0)	7/8 - 9	2200 - 3000 (248.6 - 339.0)	4600 (542.4)
1.00 (25.40)	1 - 12	3700 - 5500 (418.1 - 621.5)	10000 (1130.0)	1 - 8	3700 - 5000 (418.1 - 565.0)	7600 (858.8)
1.1250 (28.5750)	1-1/8 - 12	5000 - 7000 (565.0 - 791.0)	15000 (1695.0)	1-1/8 - 8	5500 - 6500 (621.5 - 734.5)	12000 (1356.0)
1.250 (31.750)	1-1/4 - 12	9000 - 11000 (1017.0 - 1243.0)	25000 (2825.0)	1-1/4 - 8	6500 - 8000 (734.5 - 904.0)	16000 (1469.0)

Table 202. Recommended Standard Torques for Shear-Type Fasteners

Diameter inch (mm)	Thread Size (Fine)	Recommended Torque in. lb (Nm)	Maximum Allowable in. lb (Nm)	Thread Size (Coarse)	Recommended Torque in. lb (Nm)	Maximum Allowable in. lb (Nm)
0.1640 (4.1656)	8 - 36	7 - 9 (0.79 - 1.02)	12 (1.36)	8 - 32	7 - 9 (0.79 - 1.02)	12 (1.36)
0.1900 (4.8260)	10 - 32	12 - 15 (1.36 - 1.69)	25 (2.82)	10 - 24	12 - 15 (1.36 - 1.69)	21 (2.37)
0.250 (6.350)	1/4 - 28	30 - 40 (3.39 - 4.52)	60 (6.78)	1/4 - 20	25 - 30 (2.82 - 3.39)	45 (5.08)
0.3125 (7.9375)	5/16 - 24	60 - 85 (6.78 - 9.60)	140 (15.82)	5/16 - 18	48 - 55 (5.42 - 6.21)	100 (11.30)
0.3750 (9.5250)	3/8 - 24	95 - 110 (10.73 - 12.43)	240 (27.12)	3/8 - 16	95 - 110 (10.73 - 12.43)	170 (19.21)
0.4375 (11.1125)	7/16 - 20	270 - 300 (30.51 - 33.90)	500 (56.49)	7/16 - 14	140 - 155 (15.82 - 17.51)	280 (31.64)
0.50 (12.70)	1/2 - 20	290 - 410 (32.77 - 46.32)	660 74.57)	1/2 - 13	240 - 290 (27.12 - 32.77)	520 (58.75)
0.5625 (14.2875)	9/16 - 18	480 - 600 (54.23 - 67.79)	960 (108.47)	9/16 - 12	300 - 420 (33.90 - 47.45)	650 (73.44)
0.6250 (15.8750)	5/8 - 18	660 - 780 (74.57 - 88.13)	1400 (158.2)	5/8 - 11	420 - 540 (47.45 - 61.01)	900 (101.69)
0.750 (19.050)	3/4 - 16	1300 - 1500 (146.9 - 169.5)	3000 (339.0)	3/4 - 10	700 - 950 (79.09 - 107.34)	1500 (169.5)
0.8750 (22.2250)	7/8 - 14	1500 - 1800 (169.5 - 203.4)	4200 (474.6)	7/8 - 9	1300 - 1800 (146.9 - 203.4)	2700 (305.1)
1.00 (25.40)	1 - 12	2200 - 3300 (248.6 - 372.9)	6000 (678.0)	1 - 8	2200 - 3000 (248.6 - 339.0)	4500 (508.5)
1.1250 (28.5750)	1-1/8 - 12	3000 - 4200 (339.0 - 474.6)	9000 (1017.0)	1-1/8 - 8	3300 - 4000 (372.9 - 452.0)	7200 (813.6)
1.250 (31.750)	1-1/4 - 12	5400 - 6600 (610.2 - 745.8)	15000 (1695.0)	1-1/4 - 8	4000 - 5000 (452.0 - 565.0)	10000 (1130.0)

Table 203. Locking (Drag) Torque for Self-Locking Fasteners

Diameter inch (mm)	Thread Size (Fine)	Maximum in. lb (Nm)	Minimum in. lb (Nm)	Thread Size (Coarse)	Maximum in. lb (Nm)	Minimum in. lb (Nm)
0.1640 (4.1656)	8-36	15 (1.7)	1.50 (0.17)	8 - 32	15 (1.7)	1.50 (0.17)
0.1900 (4.8260)	10 - 32	18 (2.03)	2.0 (0.23)	10 - 24	18 (2.03)	2.0 (0.23)
0.250 (6.350)	1/4 - 28	30 (3.39)	3.50 (0.40)	1/4 - 20	30 (3.39)	4.50 (0.51)
0.3125 (7.9375)	5/16 - 24	60 (6.78)	6.50 (0.73)	5/16 - 18	60 (6.78)	7.50 (0.85)
0.3750 (9.5250)	3/8 - 24	80 (9.04)	9.50 (1.07)	3/8 - 18	80 (9.04)	12.0 (1.36)
0.4375 (11.1125)	7/16 - 20	100 (11.3)	14.0 (1.58)	7/16 - 14	100 (11.3)	16.50 (1.86)
0.50 (12.70)	1/2 - 20	150 (16.95)	18.0 (2.03)	1/2 - 13	150 (16.95)	24.0 (2.71)
0.5625 (14.2875)	9/16 - 18	200 (22.60)	24.0 (2.71)	9/16 - 12	200 (22.60)	30.0 (3.39)
0.6250 (15.8750)	5/8 - 18	300 (33.90)	32.0 (3.62)	5/8 - 11	300 (33.90)	40.0 (4.52)
0.750 (19.050)	3/4 - 16	400 (45.19)	50.0 (5.65)	3/4 - 10	400 (45.19)	60.0 (6.78)
0.8750 (22.2250)	7/8 - 14	600 (67.79)	70.0 (7.91)	7/8 - 9	600 (67.79)	82.0 (9.27)
1.00 (25.40)	1 - 12	800 (90.39)	90.0 (10.17)	1 - 8	800 (90.39)	110.0 (12.43)
1.1250 (28.5750)	1-1/8 - 12	900 (101.69)	117.0 (13.22)			
1.250 (31.750)	1-1/4 - 12	1000 (112.98)	143.0 (16.16)			

This Page Intentionally Left Blank

Section

20-90-00

Nondestructive Inspection

This Page Intentionally Left Blank

NONDESTRUCTIVE INSPECTION MAINTENANCE PRACTICES

1. Nondestructive Inspection Methods

A. Visual Inspection

(Ref. Figure 201)

(1). Select applicable visual inspection aids from the following list:

(a). A flashlight with the correct explosive atmosphere rating, beam spread, efficiency, and brightness for the inspection being performed.

(b). An inspection mirror on a ball joint for use in viewing an area that is not in the normal line of sight.

(c). A 2-10 power magnifying glass to expose defects that cannot be seen by the unaided eye.

(d). A borescope to allow remote visual inspection of internal surfaces or otherwise inaccessible areas.

(2). Perform a preliminary inspection of overall general area for cleanliness, presence of foreign objects, deformed or missing fasteners, security of parts, corrosion, and damage.

(3). Treat any corrosion found during preliminary inspection.

(4). Clean the areas or surface of parts to be inspected.

(a). Remove any contaminates that might hinder surface indications.

(b). Do not remove protective finishes.

(5). Using optical aids as required, inspect area as follows:

(a). Examine surface for cracks using a flashlight, and confirm with a magnifying glass.

(b). Examine surface for other discontinuities, such as: discoloration from overheating; buckled, bulging, dented skin; cracked, chafed, split, or dented tubing; chafed electrical wiring; delaminating of composites; and damaged protective finishes.

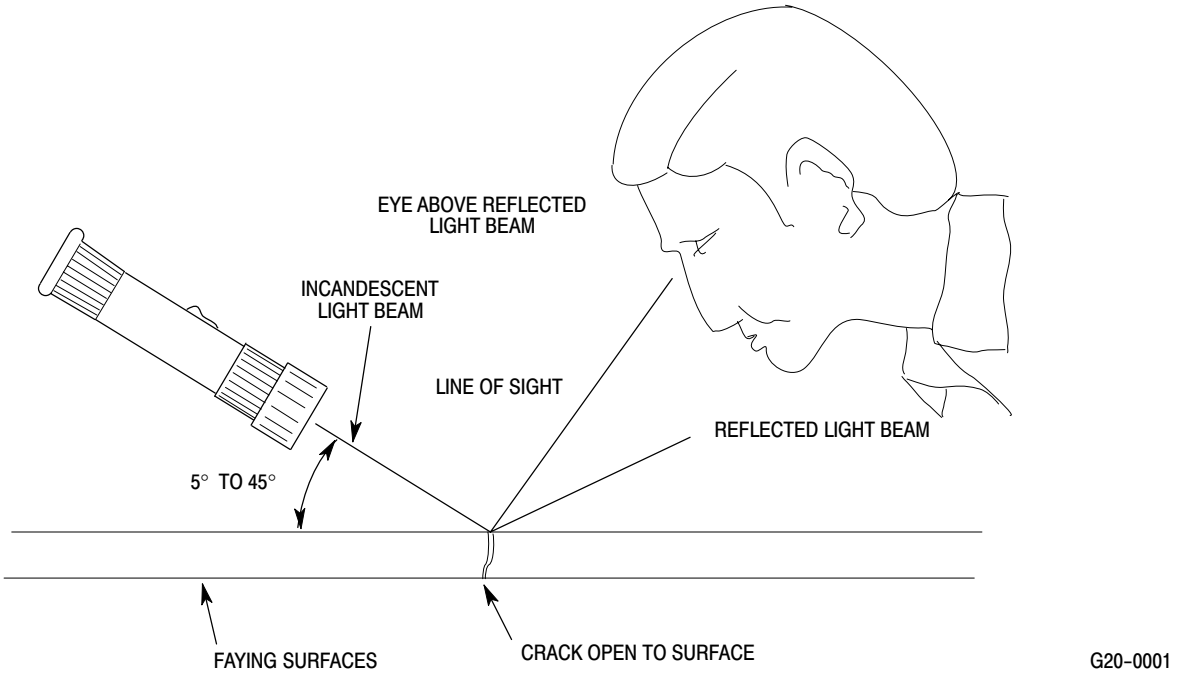

Figure 201. Visual Inspection Technique

B. Dye Penetrant Inspection

Consumable Materials
(Ref. Section 91-00-00)

Item	Nomenclature
CM234	Solvent, dry-cleaning
CM805	Dye penetrant kit

(1). Using cleaning solvent (CM234), clean area to be inspected.

NOTE:

- Manufacturers instructions on Dye Penetrant Kit take precedence over the following steps.
- Parts to be inspected must be dry and heated to at least 70°F (21.1°C) but not over 130°F (54.4°C).

(2). Apply penetrant from dye penetrant kit (CM805) by brushing, spraying or by dipping. Allow to stand for a minimum of 2 minutes.

(3). Remove excess penetrant with remover (available with dye penetrant kit (CM805)), or by cleaning with plain water. Allow part to dry.

(4). Apply a light even layer of developer from dye penetrant kit (CM805) by brushing, spraying or by dipping. When dipping, avoid excess quantity.

(5). Penetrant, which has penetrated into cracks (or other openings) in the surface of the part will be drawn out by the developer resulting in a bright red indication.

(6). If part is serviceable or repairable, clean part free of penetrant and developer with cleaning solvent (CM234).

C. Coin Tap Inspection

(Ref. Figure 202)

Consumable Materials
(Ref. Section 91-00-00)

Item	Nomenclature
CM234	Solvent, dry-cleaning

The coin tap method of inspection is used evaluate composite structures. The coin tap is limited to detecting shallow defects.

When inspecting cored structure, two sided access is required. When multiple laminates are installed over core, the core bond-line cannot be evaluated.

The sound of an acceptable part can vary considerably and the entire area must be tapped in order to detect any variance. Compare the sound of the suspected area with the sound of a known acceptable area.

An acceptable area will have a slightly sharper or crisper sounding response. A dead or flat sound is unacceptable, and requires a more thorough type of NDI.

CAUTION Any suspect areas must be inspected by person(s) qualified in the appropriate NDI. Contact MDHI cognizant engineering for recommended NDI procedures and applications.

(1). Thoroughly clean area to be inspected with cleaning solvent (CM234).

(2). Perform a visual inspection for any raised or blistered appearing areas.

NOTE: Tap the entire area to be inspected including any surrounding area of like construction.

(3). Using a coin, light hammer, or other suitable blunt object, lightly tap the surface of the part to be inspected.

D. Fluorescent Penetrant Inspection

Refer to the appropriate manufacturer's related instructions for type of equipment and materials being used.

E. Magnetic Particle Inspection

Refer to the appropriate manufacturer's related instructions for type of equipment and materials being used.

F. Eddy-current Inspection

Refer to the appropriate manufacturer's related instructions for type of equipment and materials being used.

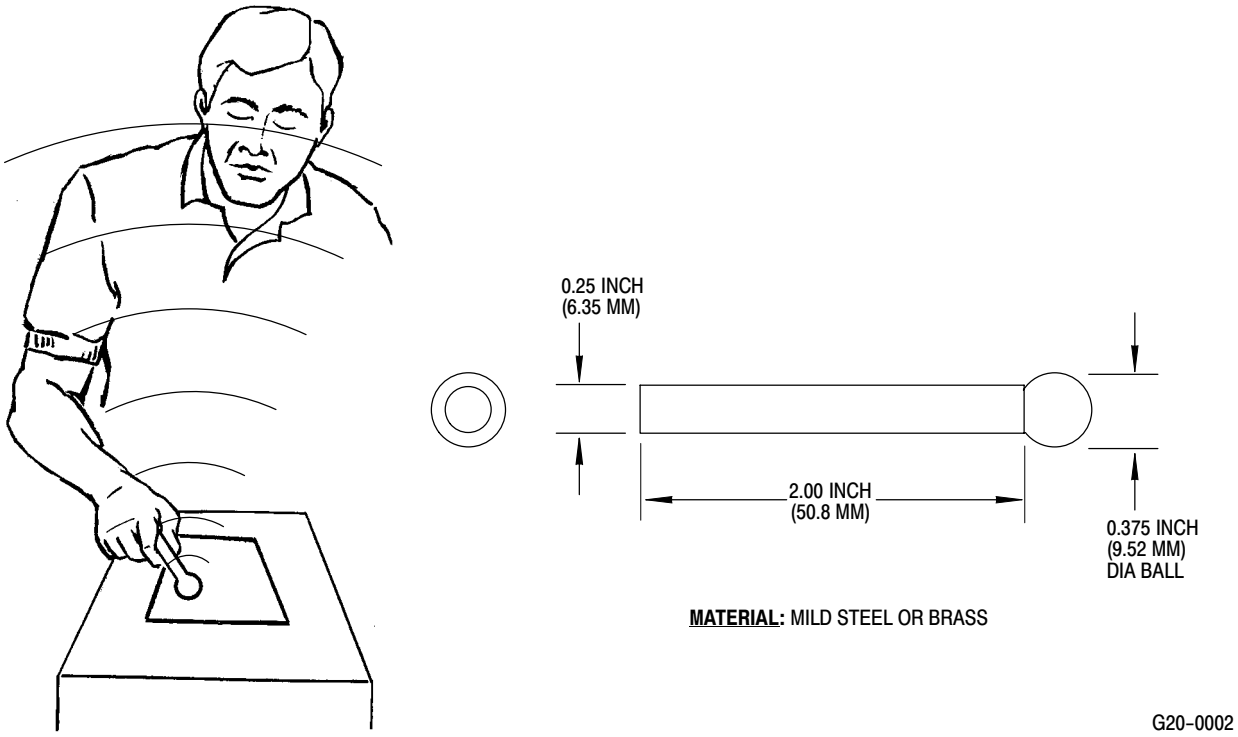

Figure 202. Coin Tap Inspection

This page intentionally left blank!

TABLE OF CONTENTS

Para/Figure/Table	Title	Page
53-00-00	**Fuselage**	**A**
	Maintenance Practices	**201**
1.	Fuselage – General	201
2.	Stressed Sheet Metal Panels	201
3.	Stressed Sheet Metal Panel Inspection	201
4.	Non–Stressed Sheet Metal Panels	201
5.	Negligible Damage Inspection	201
	Table 201. Negligible Damage Inspection – Fuselage	202
	Figure 201. Fuselage – Major Sections	203
	Figure 202. Fuselage – Model 600N	204
53-10-00	**Windshields and Aft Section Windows**	**A**
	Maintenance Practices	**201**
1.	Windshields	201
2.	Aft Section Windows	201
3.	Aft Section Windows Replacement	201
	A. Aft Section Windows Removal	201
	B. Aft Section Windows Installation	201
4.	Windshield Frame Replacement	201
	A. New–Style Windshield Installation	201
5.	Windshield Inspection	201
6.	Windshield Repair	201
7.	Water Leak Prevention	202
8.	Geon Strips Repair	202
	Table 201. Negligible Damage of Canopy/Windshield	202
	Figure 201. (Round Nose) Windshields and Aft Section Windows	203
	Figure 202. (Extended Nose) Windshield and Aft Section Windows	204
	Figure 203. Windshield Installation (New Style)	205
	Figure 204. (Extended Nose) Windshields and Aft Section Windows (New Style)	206
53-20-00	**Lower Center Fuselage**	**A**
	Maintenance Practices	**201**
1.	Lower Center Fuselage – General	201
2.	Lower Center Fuselage Inspection	201
3.	Fuel Tank Support Skin Inspection (Fuel Cells Removed)	201
4.	Fuel Tank Support Skins Repair (Fuel Cells Removed)	201
	Figure 201. Lower Center Fuselage (369D/E/FF – 500N)	202

TABLE OF CONTENTS (Cont.)

Para/Figure/Table	Title	Page
	Figure 202. Lower Center Fuselage (Model 600N)	203
53-30-00	**Upper Aft Section Fuselage (369D/E/FF)**	**A**
Maintenance Practices		**201**
1.	Upper Firewall Replacement	201
2.	Firewall and Plenum Chamber Panels Replacement	201
	Figure 201. Soundproofing Insulation – Firewall and Plenum Chamber (Sheet 1 of 2)	202
	A. Mast Support Structure	204
3.	Mast Support Structure Inspection	204
	A. Firewalls	204
4.	Firewalls Inspection	204
	Figure 202. Firewall and Aft Section	205
	A. Firewall, Station 124.00 Insulation and Soundproofing	205
5.	Firewall and Plenum Chamber Soundproofing Panel Inspection	205
	A. Engine Air Inlet Fairing	205
6.	Engine Air Inlet (Plenum Chamber) Inspection	206
	A. Upper Aft Section General Repair	206
	B. Aft Fuselage Fittings	206
	C. Aft Fuselage Fittings General Repair	206
7.	Aft Section Strut Repair	206
8.	Silver Brazing Procedure – Upper Firewall Shell Patch	206
	Figure 203. Major Bulkheads and Structural Members – Aft Fuselage	207
9.	Plenum Chamber Hole Sealing	208
10.	Forward Fuselage Section Structure Rework	208
11.	Transmission Compartment Air Baffle, Seal and Cover Initial Installation	209
	Table 201. Weight and Balance Data	210
	Figure 204. Forward Fuselage Section Structure Rework	211
	Figure 205. Installation of Air Baffle, Seal and Cover Assemblies (Sheet 1 of 2)	212
53-30-30	**Upper Aft Section Fuselage (500/600N)**	**A**
Maintenance Practices		**201**
1.	Engine/Anti–Torque Air Inlet Fan Fairings	201
2.	Engine Air and Fan Inlet (Plenum Chamber Area) Inspection	201
	Figure 201. Upper Aft Section (500N)	202
	Figure 202. Upper Aft Section Fuselage (600N)	203
	A. Upper Aft Section General Repair	204
3.	Upper Fuselage Controls Fairing (600N)	204

TABLE OF CONTENTS (Cont.)

Para/Figure/Table	Title	Page
4.	Upper Fuselage Controls Fairing Replacement (600N)	204
A.	Upper Fuselage Controls Fairing Removal	204
B.	Upper Fuselage Controls Fairing Installation	204
5.	Engine Inlet Fairings Replacement	204
A.	Engine Inlet Fairing Removal	204
B.	Engine Inlet Fairing Installation	204
6.	Anti–Torque Fan Air Inlet Screen Replacement	204
A.	Fan Air Inlet Screen Removal	204
B.	Fan Air Inlet Screen Installation	204
7.	Fan Hub and Transmission Cover Fairing Replacement	204
A.	Fan Hub and Transmission Cover Removal	204
B.	Fan Hub and Transmission Cover Installation	205
8.	Engine Plenum Access Cover Replacement	205
A.	Engine Plenum Access Cover Removal	205
B.	Engine Plenum Access Cover Installation	205
9.	Tailboom Attach Fitting Inspection	205
	Figure 203. Tailboom Attach Fitting Inspection	206
10.	Lower Longeron Inspection (L158, R158)	207
11.	Forward Upper Longeron Inspection (L137, R137)	207
	Figure 204. Inspection Hole Locations	208
12.	Control Tunnel (FS 78.50) Beam Inspection	209
	Figure 205. Control Tunnel (FS 78.50) Beam Inspection	209
53-40-00	**Tailboom (369D/E/FF)**	**A**
Maintenance Practices		**201**
1.	Tailboom – General	201
2.	Tailboom Replacement	201
A.	Tailboom Removal	201
B.	Tailboom Installation	201
	Figure 201. Tailboom Assembly and Tailboom Extension	202
3.	Tailboom Extension Replacement (369FF)	202
4.	Tailboom Inspection	203
5.	Tailboom Repair	203
	Figure 202. Tailboom Installation and Removal	204
53-40-30	**Tailboom (500/600N)**	**A**
Maintenance Practices		**201**
1.	Tailboom Description	201

TABLE OF CONTENTS (Cont.)

Para/Figure/Table	Title	Page
2.	Tailboom Replacement	201
	A. Tailboom Removal	201
	Figure 201. Tailboom Assembly (Sheet 1 of 3)	202
	B. Tailboom Installation	205
3.	Tailboom Inspection	205
	Figure 202. Tailboom Flap Inspection	206
4.	Tailboom Repair	206
5.	Stator Replacement	206
	A. Stator Removal	207
	B. Stator Installation	207
6.	Stator Blade Replacement	207
7.	Rotating Thruster Cone Replacement	207
	A. Rotating Thruster Cone Removal	207
	B. Rotating Thruster Cone Installation	207
8.	Rotating Thruster Cone Inspection	207
9.	Stationary Thruster Cone Replacement	207
	A. Stationary Thruster Cone Removal	207
	B. Stationary Thruster Cone Installation	208
10.	Stationary Thruster Cone Inspection	208
11.	Conduit and Support Strap Rebonding	208
	Figure 203. Conduit and Support Strap Rebonding	209
12.	Horizontal Stabilizer Mount Fitting Replacement	209
13.	500N3500–5 Cover Installation	210
	Figure 204. 500N3500–5 Cover Installation	211
14.	Tail Skid Replacement	212
	A. Tail Skid Removal	212
	B. Tail Skid Installation	212
	Figure 205. Tail Skid Installation	212
53-50-10	**Stabilizer (T-Tail) (369D/E/FF)**	**A**
	Maintenance Practices	**201**
1.	Stabilizer – General	201
	A. Stabilizer Troubleshooting	201
2.	Horizontal Stabilizer and Tip Plate Replacement	201
	A. Horizontal Stabilizer and Tip Plate Removal	201
	B. Horizontal Stabilizer and Tip Plate Installation	201
3.	Vertical Stabilizer Replacement	202

TABLE OF CONTENTS (Cont.)

Para/Figure/Table	Title	Page
	A. Vertical Stabilizer Removal	202
	B. Vertical Stabilizer Installation	202
4.	Horizontal Stabilizer and Tip Plate Inspection	202
5.	Vertical Stabilizer Inspection	202
	Figure 201. Stabilizer T–Tail Removal and Installation	203
6.	Horizontal Stabilizer and Tip Plate Repair	204
7.	Vertical Stabilizer Repair	204
8.	Angle of Incidence Measurement	204
	Table 201. Horizontal Stabilizer Angle of Incidence	204
9.	Angle of Incidence Adjustment	205
10.	Horizontal Stabilizer Tab Weight Installation	205
	Table 202. Troubleshooting Tailboom and Tail Surfaces	205
	Figure 202. Horizontal Stabilizer Incidence Angle Measuring Tool	206
	Figure 203. Establishing Horizontal Stabilizer Angle of Incidence	206
	Figure 204. Sealing – Vertical Stabilizer (0003D – 0286D)	207
53-50-30	**Stabilizer (500/600N)**	**A**
	Maintenance Practices	**201**
1.	Stabilizers Description	201
	A. Horizontal Stabilizer Description	201
	B. Vertical Stabilizers Description	201
2.	Vertical Stabilizer Replacement	201
	A. Vertical Upper and Lower Stabilizer Removal	201
	B. Vertical Upper and Lower Stabilizer Installation	201
3.	Horizontal Stabilizer Replacement	202
	A. Horizontal Stabilizer Removal	202
	B. Horizontal Stabilizer Installation	202
	Figure 201. Stabilizer Installation with YSAS (Sheet 1 of 2)	203
4.	Horizontal Stabilizer Eye Bolt Replacement	205
	A. Horizontal Stabilizer Eye Bolt Removal	205
	B. Horizontal Stabilizer Eye Bolt Installation	205
5.	Horizontal/Vertical Stabilizer Control Tube and Bellcrank Replacement	205
	A. Horizontal/Vertical Stabilizer Control Tube and Bellcrank Removal	205
	B. Horizontal/Vertical Stabilizer Control Tube and Bellcrank Installation	205
6.	Vertical Stabilizer Inspection	205
7.	Vertical Stabilizer Repair	205
8.	Horizontal Stabilizer Inspection	205
9.	Vertical Stabilizer Torque Tube Replacement	205

TABLE OF CONTENTS (Cont.)

Para/Figure/Table	Title	Page
A.	Vertical Stabilizer Torque Tube Removal	205
Figure 202.	Stabilizer Installation without YSAS	206
B.	Vertical Stabilizer Torque Tube Installation	206
Figure 203.	Vertical Stabilizer Installation with Expandable Bolts	207
10.	Horizontal Stabilizer Repair	208
11.	Vertical Stabilizer Torque Tube and/or Bushing Replacement (Non–Bonded Bushings)	208
12.	Vertical Stabilizer Torque Tube and/or Bushing Replacement (Bonded Bushings)	208
13.	Vertical Stabilizer Torque Tube Bushing Rework (Non–Bonded Bushings to Bonded Bushings)	209
14.	Vertical Stabilizer Torque Tube Bearing Race Replacement	210
15.	Stabilizer Troubleshooting	211
Table 201.	Troubleshooting Tailboom and Tail Surfaces	211

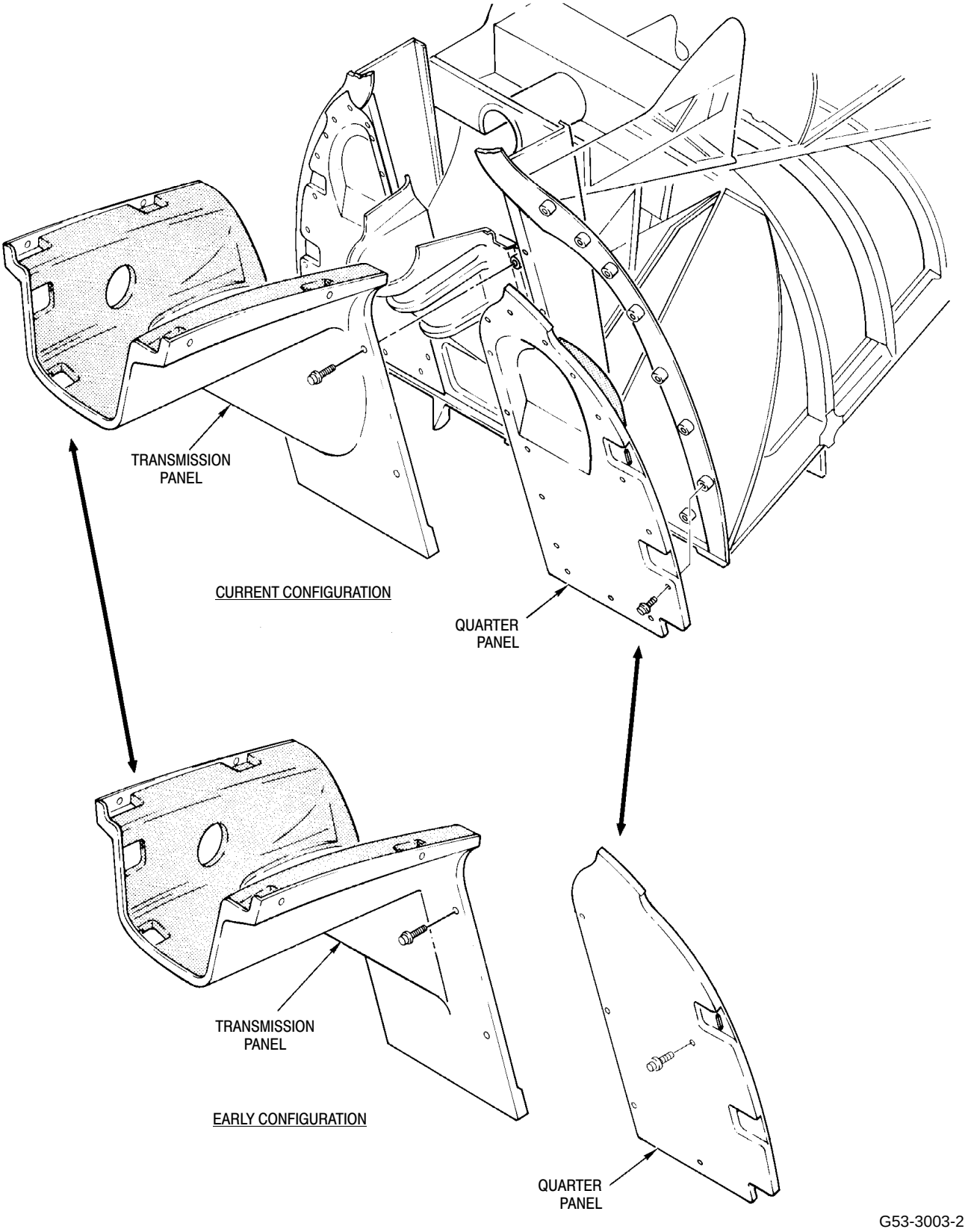

Figure 201. Soundproofing/Insulation - Firewall and Plenum Chamber (Sheet 2 of 2)

A. Mast Support Structure

The mast support structure is part of the fuselage structure and is composed of two longitudinal forged fittings, a lower pan and an aft pan. The mast support structure supports and mounts the main rotor mast.

NOTE: The main rotor static mast has been removed, in it's entirety, from this section because of duplicate information in Section 63-30-00. Refer to Section 63-30-00 for all information concerning the main rotor static mast.

3. Mast Support Structure Inspection

Accomplish the following inspection at specified intervals (Ref. Chap. 05).

CAUTION When working near or around engine air and cooling inlets, use care to prevent entry of foreign objects (Ref. Sec. 71).

(1). Remove left and right sections of air inlet forward fairing (Ref. Engine Inlet Fairing Replacement).

(2). Remove interior trim (Ref. Sec. 25-30, Interior Trim Replacement) and main gearbox access cover (same section).

(3). Detach control tunnel cover from structure and slide out of way.

NOTE: Use bright light and 5-power magnifying glass to carefully inspect areas described in steps below for evidence of cracks.

(4). Inspect visible areas of mast support fitting, mast base and mast tube, with particular attention to base attachment areas and shaded areas.

(5). Inspect both side of channels on aft canted bulkhead from mast support fitting down to waterline 34.00 with particular attention to points of attachment.

(6). Inspect side channels and fore and aft webs of controls tunnel, from mast support fitting down to top of pilot's seatback (canted bulkhead waterline 45.36).

(7). Clean and inspect any suspected area; use dye-penetrant to determine if a crack does exist. If a crack is found, part must be replaced.

(8). Inspect mast support structure for corrosion, loose bolts and rivets and general condition of finish.

(9). Check that mast support structure pan drain hole is open.

(10). Reinstall controls tunnel cover.

(11). Reinstall left and right forward sections of air inlet fairing (Ref. Engine Inlet Fairing Replacement).

(12). Reinstall main gearbox access cover and trim.

A. Firewalls

(Ref. Figure 202) A shell-like aft section upper firewall surrounds the upper portion of engine combustion chamber and exhaust pipe assembly. The design contains engine heat as well as any fire that might develop within the engine compartment. Upper firewall is thin, 0.0015 inch (0.0381 mm) thick sheet, rigidized CRES sheet covered with double thickness of nonflammable ceramic fiber blanket.

4. Firewalls Inspection

No unrepaired damage is permissible. (For repairs to forward firewall, Ref. FAA AC 43-13-1A & 2A or Structural Repair Manual.) For repairs of the upper firewall (Ref. Silver Brazing Upper Firewall Shelf Patch).

(1). Inspect forward firewall for punctures and corrosion.

(2). Inspect upper firewall for punctures, corrosion and evidence of contact with discoloration. If contact with discoloration is observed on the firewall attachment button heads, remove the upper firewall and inspect the attach frames for discoloration or damage; contact MDHI for further directions.

(3). Inspect for complete seal around openings for overrunning clutch, engine compressor air inlet and oil cooler.

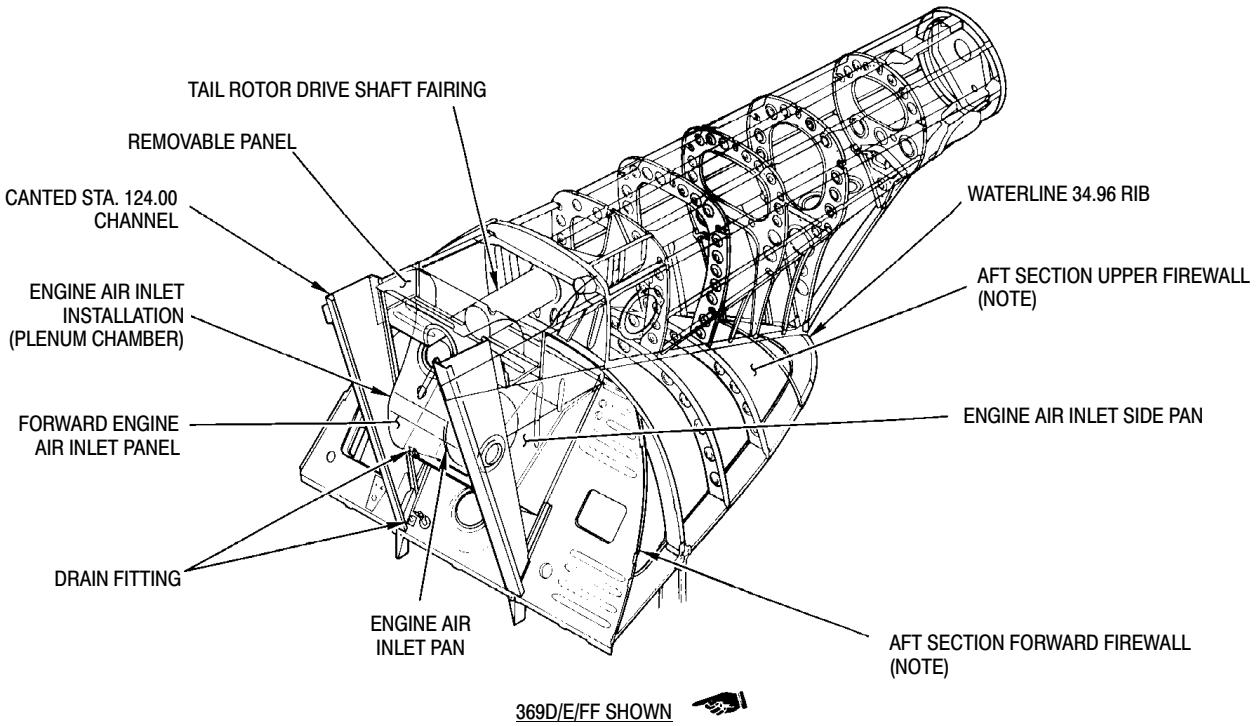

NOTE:
AFT SECTION FIREWALL IS A REMOVABLE ASSEMBLY. BOTTONHEAD FASTENERS ARE WITHDRAWN FROM INSIDE SURFACE OF FIREWALL SHELL TO REMOVE.

G53-3008A

Figure 202. Firewall and Aft Section

A. Firewall, Station 124.00 Insulation and Soundproofing

(Ref. Figure 201, Sheet 1 of 2) Engine compartment forward firewall is insulated and soundproofed for heat and noise reduction in passenger/cargo compartment.

5. Firewall and Plenum Chamber Soundproofing Panel Inspection

(Ref. Figure 201, Sheet 1 of 2 and Figure 202)

(1). Remove trim (Ref. Sec. 25-30-00, Interior Trim Replacement) for access to passenger/cargo compartment firewall areas. Open engine access doors to inspect engine compartment panels.

(2). Check for defective, torn, loose or missing panels.

(3). Inspect aft firewall for security, punctures and corrosion.

(4). Check that all individual panels are securely attached to firewall and plenum areas with no loose edges.

(5). Check panels in passenger compartment of defects, tears, looseness, or missing panels.

(6). For applicable repairs refer to Plenum Chamber Hole Sealing reference.

A. Engine Air Inlet Fairing

The engine air inlet fairing on top of the fuselage structure directs ambient outside air to the engine air inlet and oil cooler blower. The fairing installation consists of a forward fairing section and an aft fairing section. Right and left halves of forward fairing are removable. The aft fairing is riveted to fuselage structure. A UHF/VHF antenna is bonded to the aft vertical face and is part of aft fairing.

6. Engine Air Inlet (Plenum Chamber) Inspection

(1). For access, open bypass door on right side of engine air inlet and engine compartment access doors for view of rear side of plenum (Ref. Figure 202).

(2). Inspect all panels for evidence of corrosion, security of rivets and punctures.

(3). Inspect engine air shield mounting clips for secure attachment.

(4). Inspect aft section strut for rivet corrosion and edge clearance where it passes through cutout in forward panel. For applicable repairs (Ref. Aft Section Strut Repair).

(5). Ensure that removable forward panels are secure. Inspect rubber seals for security and partial compression.

(6). Inspect drive shaft tube fairing for dents, buckled or wrinkled areas and signs of corrosion.

(7). Close engine compartment access doors and two air inlet access doors.

A. Upper Aft Section General Repair

Ref. FAA AC 43.13-1A & 2A and Structural Repair Manual for additional repair procedures.

B. Aft Fuselage Fittings

Mast support structure fitting and fuselage boom fairing frame fitting are critical fatigue-loaded parts. Any damage in excess of negligible limits specified in (Ref. Aft Section Strut Repair) requires replacement of part.

C. Aft Fuselage Fittings General Repair

Repair of cast and forged fittings should only be temporary and be performed only when replacement components are not immediately available. Replacement of bushings or inserts that become part of fitting assembly are considered insertion repairs. (Insertion repairs are described in FAA AC 43.13-1A & 2A and Structural Repair Manual.)

(1). Negligible Damage (Ref. Table 201, 53-00-00).

(2). Replacement. Replace fittings according to Structural Repair Manual.

7. Aft Section Strut Repair

Repair of strut is limited to smoothing out minor dents, scratches or nicks. Replace strut if it is badly damaged according to Structural Repair Manual.

8. Silver Brazing Procedure - Upper Firewall Shell Patch

(Ref. Figure 203)

Consumable Materials
(Ref. Section 91-00-00)

Item	Nomenclature
CM234	Solvent, dry-cleaning
CM721	Tape, aluminum foil
CM817	Brazing flux
CM818	Brazing alloy

(1). Remove aft section upper firewall (Ref. Upper Firewall Replacement).

(2). Remove tape and ceramic fiber blankets from firewall shell.

(3). Clean firewall shell with stiff bristle brush moistened with solvent (CM234) and wipe dry with clean, dry cloth.

(4). Smooth out rigidized pattern in area on which patch will be brazed.

(5). Cut suitable repair patch for Type 321 stainless steel sheet in thickness range of 0.0015-0.0018 inch (0.0381-0.04572 mm).

(6). Contour patch to match contour of firewall shell repair area.

CAUTION Use only stainless steel wire brush in next step. Particles from bristles of other metals can contaminate the patch area and cause brazing to fail.

(7). Use stainless steel wire brush to clean and abrade inner and outer surfaces of stainless steel patch and firewall.

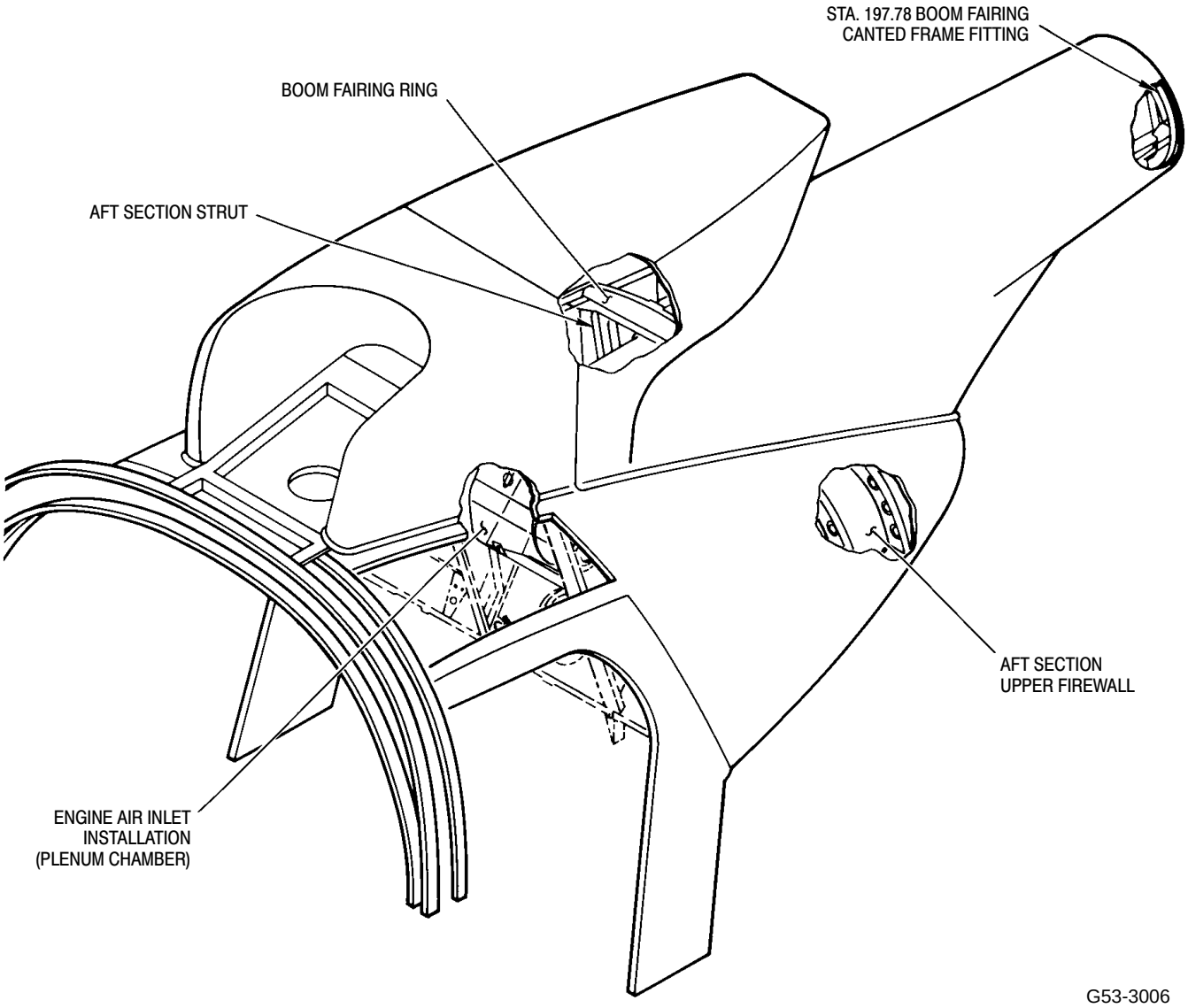

Figure 203. Major Bulkheads and Structural Members - Aft Fuselage

(8). Rinse patch and firewall shell thoroughly with clean water and allow to air dry.

(9). Coat surfaces to be joined with a thin even coating of silver alloy brazing flux (CM817).

(10). Use clamp or other suitable device to hold patch in place during brazing operation.

CAUTION Use extreme care not to overheat and burn through firewall shell.

(11). Braze patch in place with Class 8 silver brazing alloy (CM818), using suitable torch to heat patch area to temperature moderately above 1295°F (707°C) flow point of brazing alloy.

(12). Allow joint to cool for at least 60 seconds before removing clamping device.

(13). Remove flux by immersing repaired area in water at 160°-212 °F (72°-101 °C) for 40 minutes.

(14). Thoroughly rinse in clear, running water; air dry, or wipe dry with clean, dry cloth.

(15). Install ceramic blanket on outer surface of firewall shell.

(16). Install aft section upper firewall shell (Ref. Upper Firewall Replacement).

(17). Install tape (CM721) on flanges of firewall shell.

9. Plenum Chamber Hole Sealing

(Ref. Figure 203)

Consumable Materials (Ref. Section 91-00-00)

Item	Nomenclature
CM418	Cement, epoxy
CM424	Sealing compound
CM713	Tape, pressure sensitive

CAUTION All tape must be applied to outside of inlet surfaces, so that any subsequently loosened tape cannot enter plenum chamber to cause engine damage.

(1). Using 10 mil by 1 inch (2.54 cm) pressure-sensitive tape (CM713), tape all 0.130 inch (3.302 mm) diameter or larger holes.

(2). Using sealant (CM424), seal all holes less than 0.130 inch (3.302 mm) diameter.

(3). Rebond loose rubber seals with adhesive (CM418) according to container instructions.

10. Forward Fuselage Section Structure Rework

(Ref. Figure 204) The following information is a procedure for installing support assemblies to the fuselage frame structure to provide reinforcement at the forward attach points for the engine inlet fairing assemblies.

Consumable Materials (Ref. Section 91-00-00)

Item	Nomenclature
CM318	Primer

(1). Remove engine inlet forward fairing assemblies from helicopter (Ref. Engine Inlet Fairing Replacement).

(2). Remove interior trim panels and wire harnesses, as applicable, to gain access to work area at forward area at forward attach nutplate assembly for L/H and R/H engine inlet forward fairings.

(3). Remove existing forward nutplate (for both L/H and R/H fairing assemblies) from fuselage frame structure.

(4). Inspect upper fuselage skin for cracks or damage at area of forward nutplate attachment holes. Also inspect repair doublers if, previously installed, on upper fuselage skin.

NOTE: If cracking or damage to fuselage skin or repair doublers is noted, perform the following:

(a). Stop drill all cracks or remove damaged skin area or damaged repair doublers prior to rework. Perform all work in accordance with FAA AC 43.13-1A, Aircraft Inspection and Repair.

(b). Field fabricate and install doublers on outer fuselage skin. Drill 0.196-0.204 inch (4.978-5.182 mm) diameter hole in each doubler to match existing hole in fuselage skin for fairing attach screw. Use existing rivet pattern as shown; install MS20470AD3 rivets with primer (CM318).

(c). Prime and paint double to match finish color of helicopter.

(5). Inspect fuselage frame structure (channel) for cracks or damage at forward nutplate attach areas.

NOTE: If no cracking or damage to fuselage frame is noted, install 80-369D22400-3 and -4 support assemblies at FWD side of frame structure using rivets. Drill holes in support assemblies for nutplates and for conduit clearances as required. Install nutplate rivets (MS20470AD3) through support, frame, upper skin and doubler, if installed.

(6). If cracking or damage to fuselage frame is noted, perform the following:

(a). Stop drill all cracks or remove damaged area prior to installation of repair angles and support assemblies. Perform all work in accordance with FAA AC 43.13-1A, Aircraft Inspection and Repair.

(b). Field fabricate and install repair angles at AFT side of fuselage frame structure (channel) and install 80-369D22400-3 and -4 support assemblies at FORWARD side of frame structure using MS20470AD3 rivets. Drill 0.096 inch (2.4384 mm) diameter holes in angles to match support assemblies.

(c). Drill holes in support assemblies and repair angles for nutplates and for conduit clearance as required. Install nutplate rivets through support, frame, angle, upper skin and doubler, if installed.

(7). Check installation of 80-369D22400-3 and -4 assemblies and repair angles and doublers, if installed, for discrepancies.

(8). Reinstall removed components.

11. Transmission Compartment Air Baffle, Seal and Cover Initial Installation

(Ref. Figure 205) (Serial No. 0003D thru 0333D only)

Consumable Materials
(Ref. Section 91-00-00)

Item	Nomenclature
N/A	Calking compound
CM425	Sealing compound
CM712	Tape, pressure sensitive

(1). Remove engine air inlet forward fairings.

(2). Remove cooling fan inlet screen.

(3). Remove aft compartment interior trim panels and blower access door.

(4). Install PN 369D26541-19 upper baffle assembly as follows;

(a). Position baffle between main transmission and mast support structure. Align four attach holes in baffle with existing holes in structure.

(b). Install baffle with screws, washers and nuts. Seal screw heads with sealant (CM425).

(5). Install PN 369D26542 lower baffle to upper baffle with two screws and washers at matching nutplates in upper baffle.

(6). Disconnect 5/8 inch (15.875 mm) diameter drain tube at mast support base and insert tube though hole in baffle. Safetywire drain tube to structure.

(7). Reinstall blower access door.

(8). Position and install PN 369D26543-11 and -12 seal assemblies at lower baffle and blower access door as shown. Install seal assemblies with screws and washers at matching clipnuts on lower baffle and on blower.

NOTE: If excessive gap, 0.060 inch (1.524 mm) or more, exists between structure and rubber extrusion on seals, fill gap by bonding strip of adhesive- backed gasket to structure.

(9). Position PN 369D26545-11 and -21 cover assemblies as shown; align cover attach holes with existing fairing attach nutplates. Temporarily secure cover assemblies with screws and washers, 5 places each.

(10). Using caulking compound, seal all gaps between fuselage structure and baffle; seal and cover assemblies.

(11). Remove screws securing cover assemblies. Reinstall engine air inlet forward fairings.

(12). Reinstall aft compartment trim.

(13). For helicopters equipped with Rotor Brake Kit, perform the following;

NOTE: Not applicable if modified rotor brake handle trim cover panel has already been installed.

(a). Carefully trim modified trim cover panel assembly (for LH or RH rotor brake handle assembly). Locate and drill screw attach holes in modified panel.

(b). Slide modified trim panel boot over brake handle. Align screw holes and check panel for fit. Remove panel and make minor trim adjustments as required.

(c). Install panel if removed and secure panel with attaching hardware.

(d). Push panel boot aft on brake handle approximately two inches and secure with fastener tape.

Table 201. Weight and Balance Data

Weight		Arm		Moment	
lbs	(kg)	inches	(cm)	in-lbs	(kg-mm)
+1.5	(+0.681)	110.2	(279.908)	+169	(+1947.0828)

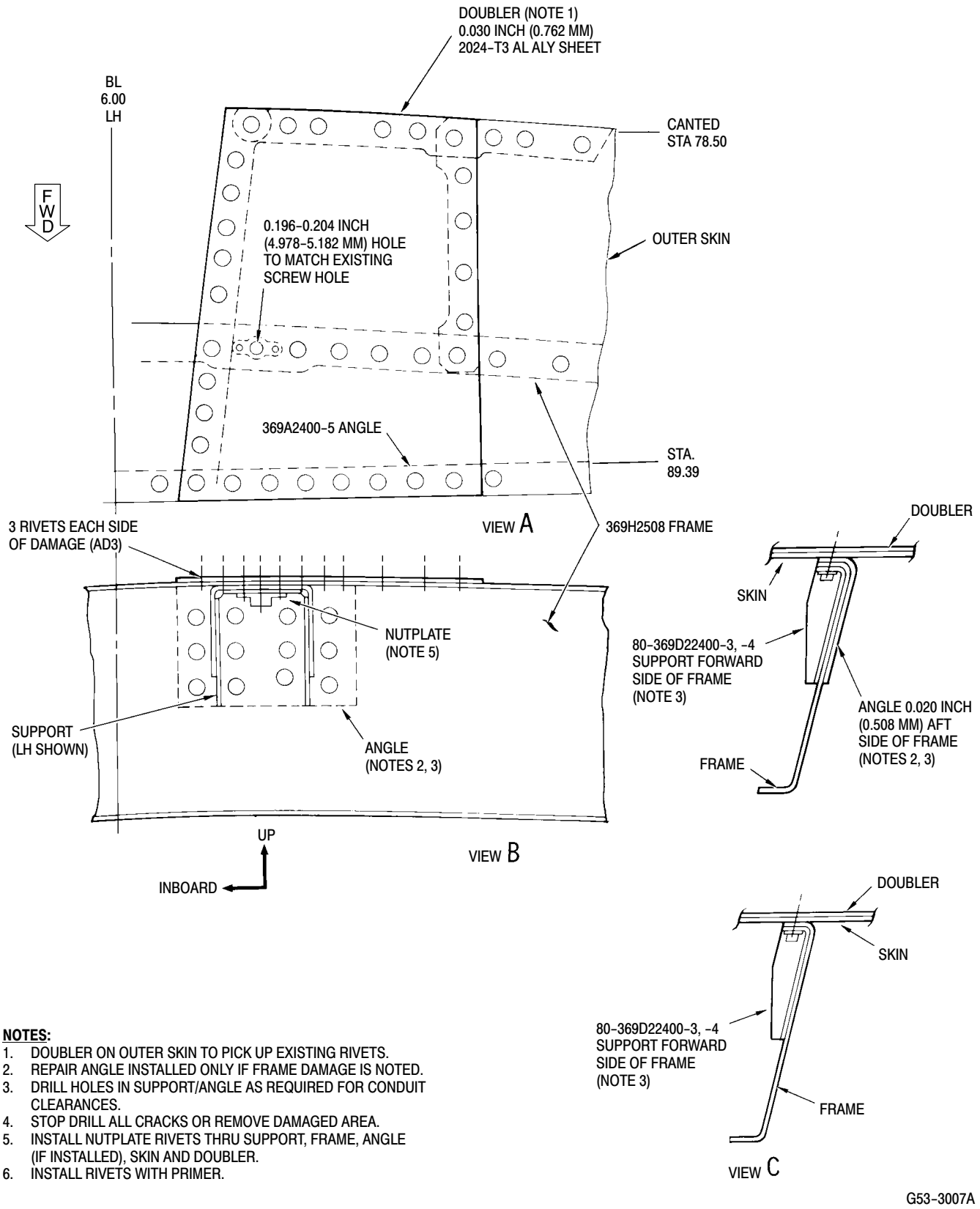

NOTES:

1. DOUBLER ON OUTER SKIN TO PICK UP EXISTING RIVETS.
2. REPAIR ANGLE INSTALLED ONLY IF FRAME DAMAGE IS NOTED.
3. DRILL HOLES IN SUPPORT/ANGLE AS REQUIRED FOR CONDUIT CLEARANCES.
4. STOP DRILL ALL CRACKS OR REMOVE DAMAGED AREA.
5. INSTALL NUTPLATE RIVETS THRU SUPPORT, FRAME, ANGLE (IF INSTALLED), SKIN AND DOUBLER.
6. INSTALL RIVETS WITH PRIMER.

Figure 204. Forward Fuselage Section Structure Rework

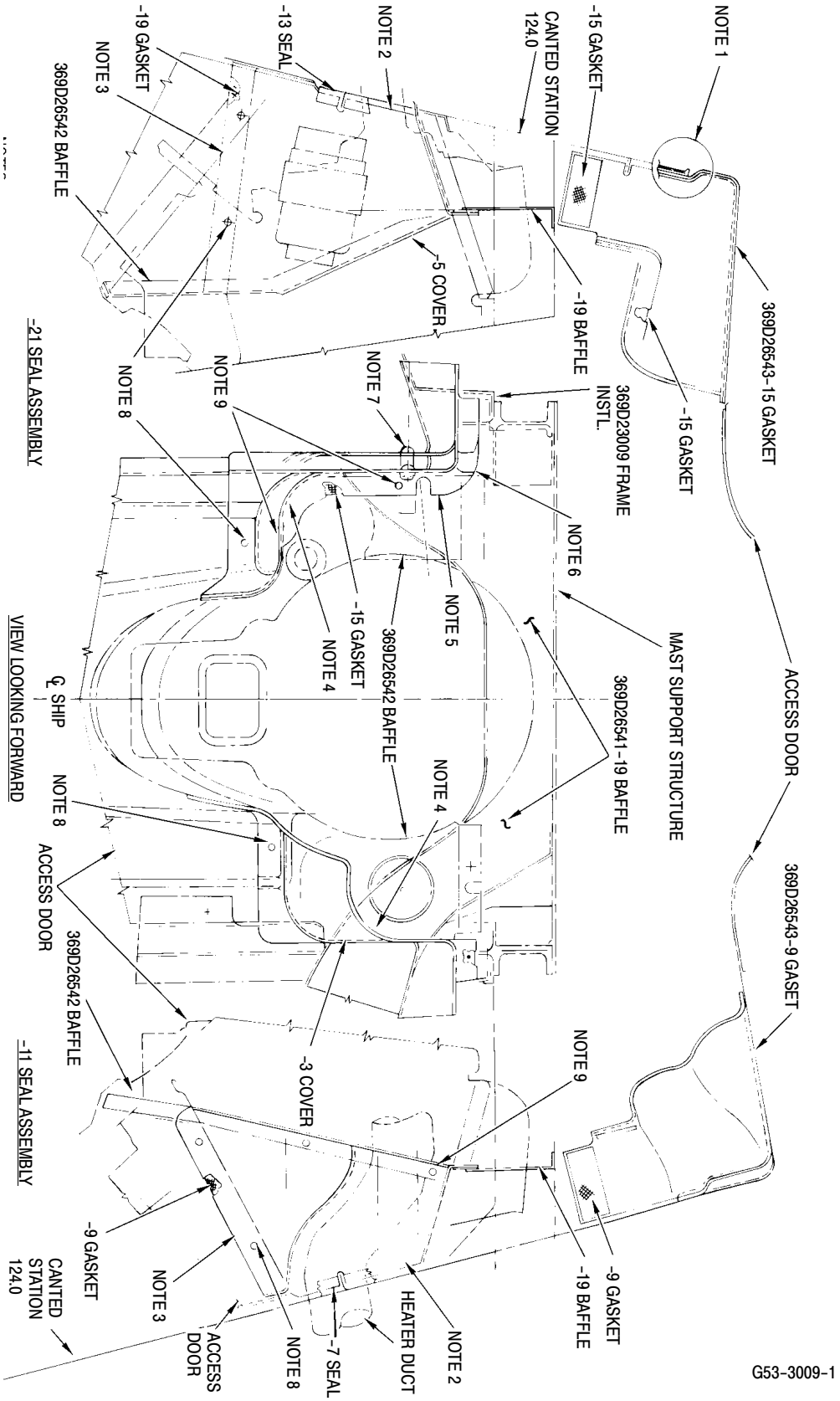

NOTES:

1. MOLD ALONG STRUCTURE AND JOGGLE ON 369D22070 ACCESS DOOR.
2. TRIM REAR END ALONG CANTED STA. 124.0 TO CLEAR STRUCTURAL COMPONENTS. CLEARANCE TO STRUCTURE BEFORE BONDING SEAL IS 0.16 INCH.
3. MOLD BOTTOM END ALONG UPPER OUTSIDE CONTOUR OF 369D22070 ACCESS DOOR. TRIM BOTTOM END TO SECURE MINIMUM OVERLAP OF 0.50 INCH.
4. INSIDE CONTOUR TO MATCH 369D26542 BAFFLE.
5. FORWARD FLANGE TO MATCH 369D26542 BAFFLE.
6. JOGGLE TO CLEAR 369D26542 BAFFLE.
7. OPTIONAL 0.50 INCH WIDTH CUTOUT FOR ROTOR BRAKE (RH CONTROL)
8. HOLE(S) MATCH CLIP NUTS IN 369D22070 ACCESS DOOR.
9. HOLE(S) MATCH CLIP NUTS IN 369D26542 BAFFLE.

Figure 205. Installation of Air Baffle, Seal and Cover Assemblies (Sheet 1 of 2)

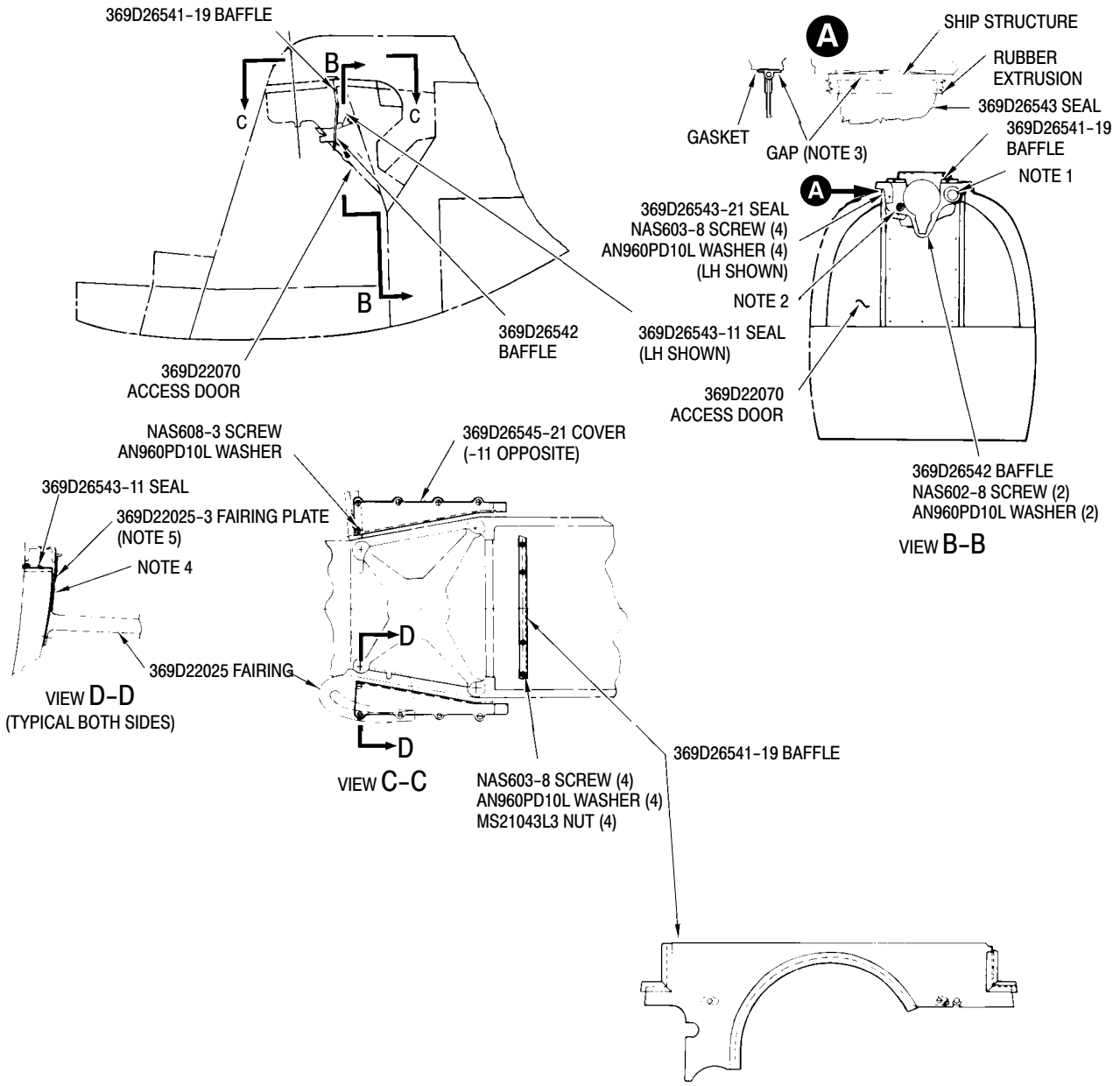

NOTES:

1. DURING INSTALLATION OF 369D26542 BAFFLE, DISCONNECT AND INSERT HEATER DUCT THRU HOLE IN BAFFLE.
2. AFTER 369D26542 BAFFLE IS INSTALLED, DISCONNECT AND ROUTE DRAIN TUBE THRU HOLE IN BAFFLE.
3. IF EXCESSIVE GAP (0.06 X 1.00 OR MORE)EXISTS BETWEEN STRUCTURE AND RUBBER EXTENSION ON SEALS, FILL GAP BY BONDING STRIP OF ADHESIVE-BACKED GASKET TO STRUCTURE.
4. NO. 10 SCREW HOLE IN FAIRING ON SHIPS. DO NOT USE THIS HOLE TO INSTALL COVER OR FAIRING.

G53-3009-2

Figure 205. Installation of Air Baffle, Seal and Cover Assemblies (Sheet 2 of 2)

This Page Intentionally Left Blank

neously lifting blade tips. All five blades must be off stops during rigging. Padded supports should be used.

(2). Release friction and raise pilot's collective stick. Position collective rigging fixture (ST501) in outboard lower end of slot in collective friction guide link (view C).

(3). Lower collective stick on rigging fixture and tighten friction grip (drive gear).

(4). Position mixer rigging plate (ST503) on mast support fitting.

(5). Loosen longitudinal friction knob and set longitudinal cyclic trim for no load by neutralizing cyclic stick. Position cyclic stick so that longitudinal rigging fixture (ST504) fits in outboard side of slot in longitudinal friction guide link. (Index pin of fixture butts against forward end of slot, and friction knob stud fits in fixture detent - view F.)

(6). Secure fixture hook in aft end of slot. Tighten knurled thumbnut to seat bushing at forward end and tighten friction knob.

(7). Measure and record distance from horizontal centerline of bolt at aft end of longitudinal pitch mixer bellcrank (view H) to surface of mixer rigging plate. It should be same as distance from horizontal centerline of mast support bracket hingeline bolt to surface of mixer plate (Ref. Collective Controls Rigging (L/H Command), step (5).). If not, loosen jamnut, disconnect longitudinal pitch control rod and adjust rod end, to nearest half turn of rod end bearing, until dimensions are equal. This will be basic dimension for cyclic control rigging.

(8). Reconnect control rod, remove longitudinal stick rigging fixture and check mixer travel. With stick at forward stop, centerline of longitudinal pitch mixer bellcrank bolt (view B) should move up so that basic dimension recorded in step (7). above is increased minimum of 1.19 inches (3.0226 cm), or a maximum of 1.22 inches (3.0988 cm).

NOTE: Field rigging aid (Ref. Figure 501, Sheet 3) may be used to check dimensions attained in steps (4). and (5).. If dimensions attained do not correspond with dimensions shown on rigging aid, full rigging procedures must be performed.

(9). Reposition mixer rigging plate to clear longitudinal pitch mixer bellcrank. With stick at aft stop, centerline of longitudinal pitch mixer bellcrank bolt (view B) should move down so that basic dimension recorded in step (3). above decreases minimum of 0.570 inch (14.478 mm).

CAUTION Do not adjust control rod beyond witness hole. Tighten jamnut after final adjustment. Failure to observe this precaution can result in parts damage and/or equipment failure.

(10). If necessary, adjust rod end of longitudinal pitch control rod to meet limits specified in steps (4). and (5). above. Adjust carefully; tolerance is only 1/2 turn. When adjustment is complete, tighten jamnut and ensure that length of control rod does not change.

(11). Reconnect control rod to longitudinal pitch idler.

(12). Reinstall longitudinal rigging fixture; reposition and secure mixer rigging plate.

(13). Loosen friction knob and set lateral cyclic trim for no load by neutralizing cyclic stick. Position cyclic stick so that lateral rigging fixture (ST506) fits in forward side of slot in lateral friction guide link. (Index pin of fixture butts against outboard end of slot, and friction knob stud fits in fixture detent - view E.)

(14). Secure fixture hook in inboard end of slot, tighten knurled thumbnut to seat bushing at outboard end, and tighten friction knob.

(15). Measure distance from horizontal centerline of bolt connecting lateral bellcrank to stationary swashplate mixer link to (view D) surface of mixer rigging plate; it should be same as basic dimension recorded in step (3). If not,

loosen checknut, disconnect lateral pitch control rod and adjust rod end (to nearest half-turn on rod end bearing) until dimensions are equal.

(16). Reconnect control rod, remove lateral stick rigging fixture and check mixer travel. With stick at left stop, centerline of lateral bellcrank bolt (view D) should move down so that basic dimension recorded in step (3). decreases a minimum of 0.50 inch (12.70 mm) or a maximum of 0.53 inch (13.462 mm).

NOTE: The field rigging aid (Ref. Figure 501, sheet 3) may be used to check dimensions attained in steps (12). and (13).. If the dimensions attained do not correspond with dimensions shown on the rigging aid, full rigging procedures must be performed.

(17). With stick at right stop, centerline of lateral bellcrank bolt should move up so that basic dimension recorded in step (3). increases minimum of 0.43 inch (10.922 mm).

CAUTION Do not adjust control rod beyond witness hole. Tighten jamnut after final adjustment. Failure to observe this precaution can result in parts damage and/or equipment failure.

(18). If necessary, adjust rod end of lateral pitch control rod to meet limits specified in steps (12). and (13). above. When adjustment is complete, tighten jamnut and make certain that length of control rod does not change.

(19). Reconnect control rod to lateral bellcrank.

(20). Loosen friction control, friction knob, knurled thumbnuts and hooks of rigging fixture and remove all three fixtures.

CAUTION Check for interference between rod end bearings and lugs of pitch control housing. Adjust bearings as required to provide clearance.

NOTE: Next step establishes initial adjustment of main rotor pitch controls links. Final adjustment is to be made by tracking and autorotation rpm setting (Ref. Sec. 18-10-00).

(21). Remove and adjust length of each pitch control link (view G) so that centerline-to-centerline distance between rod-end bearings is 6.25 inches (15.875 cm). Then install the pitch control links.

(22). With collective stick full down and cyclic stick full forward and full left, check clearance between the rotating swashplate and the longitudinal pitch idler bellcrank. Minimum clearance is 0.125 inch (3.175 mm). Adjust the collective control rod as required.

(23). With collective stick full up and cyclic stick full left (any position fore or aft), check clearance between lateral bellcrank and, collective pitch mixer bellcrank of the mixer controls. Minimum clearance is 0.030 inch (0.762 mm). Adjust lateral control rod as required.

(24). With collective stick full down and cyclic stick full aft, check clearance between the aft longitudinal bellcrank and the mast base. Minimum clearance is 0.030 inch (0.762 mm). Adjust longitudinal control rod (preferably) or collective control rod as required.

(25). With collective stick full up and cyclic stick full forward and full left, check clearance between rotating swashplate and scissors fitting. Also check clearance between scissors rotating link and lower hub shoe. Minimum clearance in both cases is 0.030 inch (0.762 mm). Rotate hub 360 degrees to determine location of minimum clearance. Adjust collective control rod as required.

(26). Repeat step (21). above with collective stick full up and cyclic stick full forward and full right.

(b). Install AN960KD616L washer and nut and torque to **95 - 110 inch-pounds (10.73 - 12.43 Nm)**; install MS24665-285 cotter pin.

(4). Install lower bolt at link assembly and bellcrank clevis, and upper bolt intermediate control tube Sta. 137.50 bellcrank bolts as follows:

NOTE: Install bolt-head up, nut facing down.

(a). Depress pin in head of bolt to install bolt through clevis end of bellcrank.

NOTE: In the following step, pin is to remain depressed while nut is torqued.

(b). While pin is depressed, install nut and torque to **40 - 50 inch-pounds (4.52 - 5.65 Nm)**.

(c). Release pin and retorque nut to **75 - 90 inch-pounds (8.47 - 10.17 Nm)** to ensure engagement of locking balls with nut.

NOTE: Pin must be in the released position (flush with bolt head) and bolt must protrude past the nut for proper installation.

(d). Apply torque stripe.

(5). Install alternate NAS6204-11D bolt and MS17826-4 nut as follows:

(a). Install bolt, with one AN960KD416L washer through clevis assembly.

(b). Install AN960KD416L washer and nut and torque to **20 - 40 inch-pounds (2.26 - 4.52 Nm)**; install MS24665-134 cotter pin.

(6). Install four support bracket assembly bolts and washers to fan transmission support. Torque bolts to **70 - 90 inch-pounds (7.91 - 10.17 Nm)**; safety wire bolts.

8. Fan Pitch Control Tube Replacement

A. Fan Pitch Control Tube Removal

(1). Remove tail boom fairing and tail boom.

(2). Remove bolt and clevis assembly at Sta. 137.50 bellcrank. Remove convoluted boot from fan gearbox.

NOTE: The Fan Pitch Control Tube can be removed in either one of the following steps. The fan assembly pitch bearing slider, pitch bearing retainer, pitch plate bearings and bearing retainer nut with aft control tube can be removed as a unit or individually. Use extreme care do not damage parts.

(1) Remove locking wire and remove nut and lock washer from fan pitch control tube. Remove locking wire and remove three bolts and washers from pitch bearing retainer housing. Pitch bearing slider, pitch plate bearings and, bearing retainer nut with aft control tube can be removed as a unit.

(2) Remove locking wire and remove six pitch bearing housing assembly bolts. Remove pitch bearing retainer housing assembly as a unit.

B. Fan Pitch Control Tube Installation

NOTE:

- Refer to Fan Pitch Control Rigging during installation.
- Before installing fan pitch control tube, perform Fan Pitch Control Tube Inspection.

(1). Install the aft control tube.

(2). Install convoluted boot on fan gearbox or clevis.

NOTE: In the following step, clevis should be bottomed into control tube, approximately one thread showing after engagement.

(3). Install clevis assembly on aft control tube. Ensure that clevis has full thread engagement on control tube.

(4). Ensure locking washer tang tip is in slot. Tighten jam nut against locking washer and safety wire from lock to nut. Ensure safety wire pigtail is on the nut.

(5). Install floating bushing in clevis.

(6). Install bolt, bolthead on floating bushing side of clevis, through clevis and link assembly as follows:

(a). Depress pin in head of bolt to install bolt through clevis end of bellcrank.

NOTE: In the following step, pin is to remain depressed while nut is torqued.

(b). While pin is depressed, install nut and torque to **40 - 50 inch-pounds (4.52 - 5.65 Nm)**.

(c). Release pin and retorque nut to **75 - 90 inch-pounds (8.47 - 10.17 Nm)** to ensure engagement of locking balls with nut.

NOTE: Pin must be in the released position (flush with bolt head) and bolt must protrude past the nut for proper installation.

(d). Apply torque stripe.

(7). Install alternate NAS6204-11D bolt and MS17826-4 nut as follows:

(a). Install bolt, with one AN960KD416L washer through clevis assembly.

(b). Install AN960KD416L washer and nut and torque to **20 - 40 inch-pounds (2.26 - 4.52 Nm)**; install MS24665-134 cotter pin.

NOTE: Before installing fan pitch slider, perform Fan Pitch Slider Inspection.

(8). Install pitch bearing slider and bearing retainer per rigging instructions.

(9). Install pitch bearing and pitch bearing retainer housing using three bolts and washers. Torque bolts to **70 - 80 inch-pounds (7.91 - 9.04 Nm)**; safety wire bolts.

(10). Install lockwasher so that the face of the tang aligns with the tube assembly keyway, and the lockwasher aligns with one of the six slots in the face of the bearing retainer.

(11). Install jamnut on aft control tube.

(12). Torque nut to **95 -110 inch-pounds (10.73 - 12.43 Nm)** leaving a minimum of three threads protruding beyond the face of the jam nut.

(13). Install two lockwires on jamnut and lockwasher.

NOTE: After safety wiring nut and bolts, rotate fan and ensure that safety wires do not have interference with each other on rotation.

(14). Install tail boom (Ref. Sec. 53-40-30).

9. Forward Cable Assembly Replacement

(Ref. Figure 402)

A. Forward Cable Assembly Removal

CAUTION To prevent damage to the engine install F.O.D. cover over engine air inlet.

(1). Remove fairings, access doors and panels necessary to facilitate maintenance (Ref. Sec. 53-30-30).

(2). Remove tailboom fairing.

(3). Disconnect the aft end of the anti-torque control cable by turning outside collar sleeve counter-clockwise and back to expose the inner cable.

(4). Apply sufficient right pedal to expose inner cables.

(5). Without bending cable, slide male connector out of female connector.

(6). Disconnect cable assembly forward rodend from Sta. 113.00 splitter assembly outboard bellcrank clevis.

(7). Loosen jam nut at rodend and remove rodend from cable; remove jam nut.

(8). Remove safety wire, jam nuts and washers from cable assembly support bracket, remove by pulling or sliding cable assy. thru conduit and support bracket.

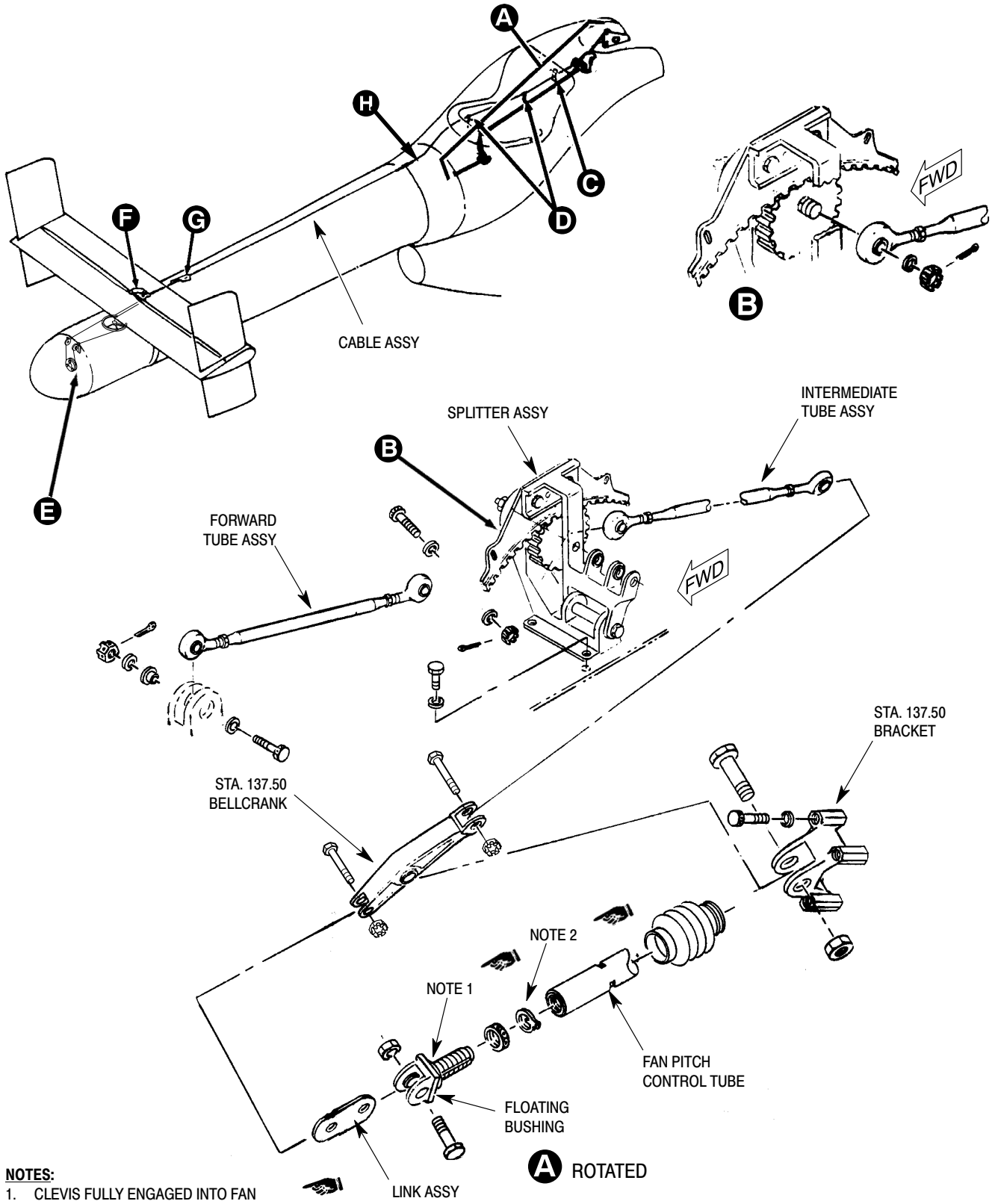

NOTES:

1. CLEVIS FULLY ENGAGED INTO FAN PITCH CONTROL TUBE.
2. SAFETY FROM LOCKING WASHER TO NUT.

G67-2008-1E

Figure 402. Upper Fuselage and Boom Control Linkage (Sheet 1 of 2)

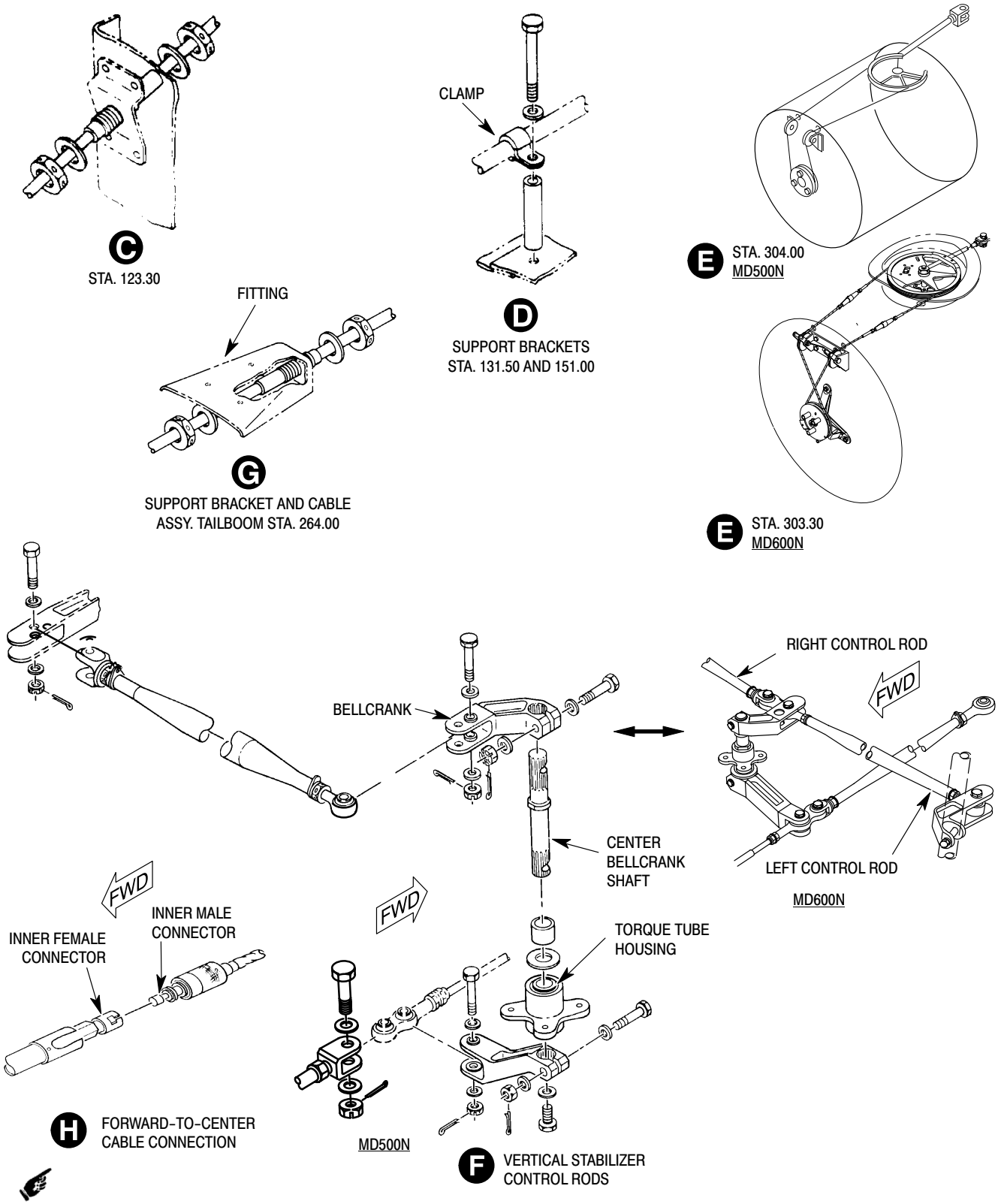

Figure 402. Upper Fuselage and Boom Control Linkage (Sheet 2 of 2)

from duct indicates that solenoid air valve has opened.

(5). Switch SCAV AIR circuit breaker OFF.

(6). Check that no scavenge air flows from outlet duct.

(7). Shut down engine per Pilot's Flight Manual.

5. Air Pressure Sensing Switch Calibration Check

(1). Assemble test equipment (Ref. Figure 601).

(2). Attach pressure switch to test equipment. Connect a suitable vacuum source to pressure switch nipple and u-tube.

(3). Connect an ohmmeter or continuity tester to pressure switch electrical leads.

(4). Cycle switch from open to close several times with vacuum. Watch meter for indication of switch closure. Release vacuum.

(5). Slowly apply vacuum. Note u-tube water height differential in both legs of the tube relative to the switch closing point. The total of the differential heights of both legs of the u-tube is equal to switch actuation pressure.

(6). Switch closing pressures shall be per the applicable particle separator installation dash number shown (Ref. Figure 601).

6. Mist Eliminator Inspection

(1). Check mist eliminator serial number for APM serial numbers 005 thru 069. Remove the wire staples from a mist eliminator so identified.

(2). Inspect frame and screens for security and condition. Replace mist eliminator if screens are partially detached, or assembly distortion prevents joint seal contact with the particle separator.

(3). Inspect all nine bolts, where installed, for security in mist eliminator frame. Repair or replace bolts as required (Ref. Page 803).

(4). Examine outlet side of mist eliminator. Surface should be slightly oily but clean. Dirt on the outlet side signals the need to clean the assembly.

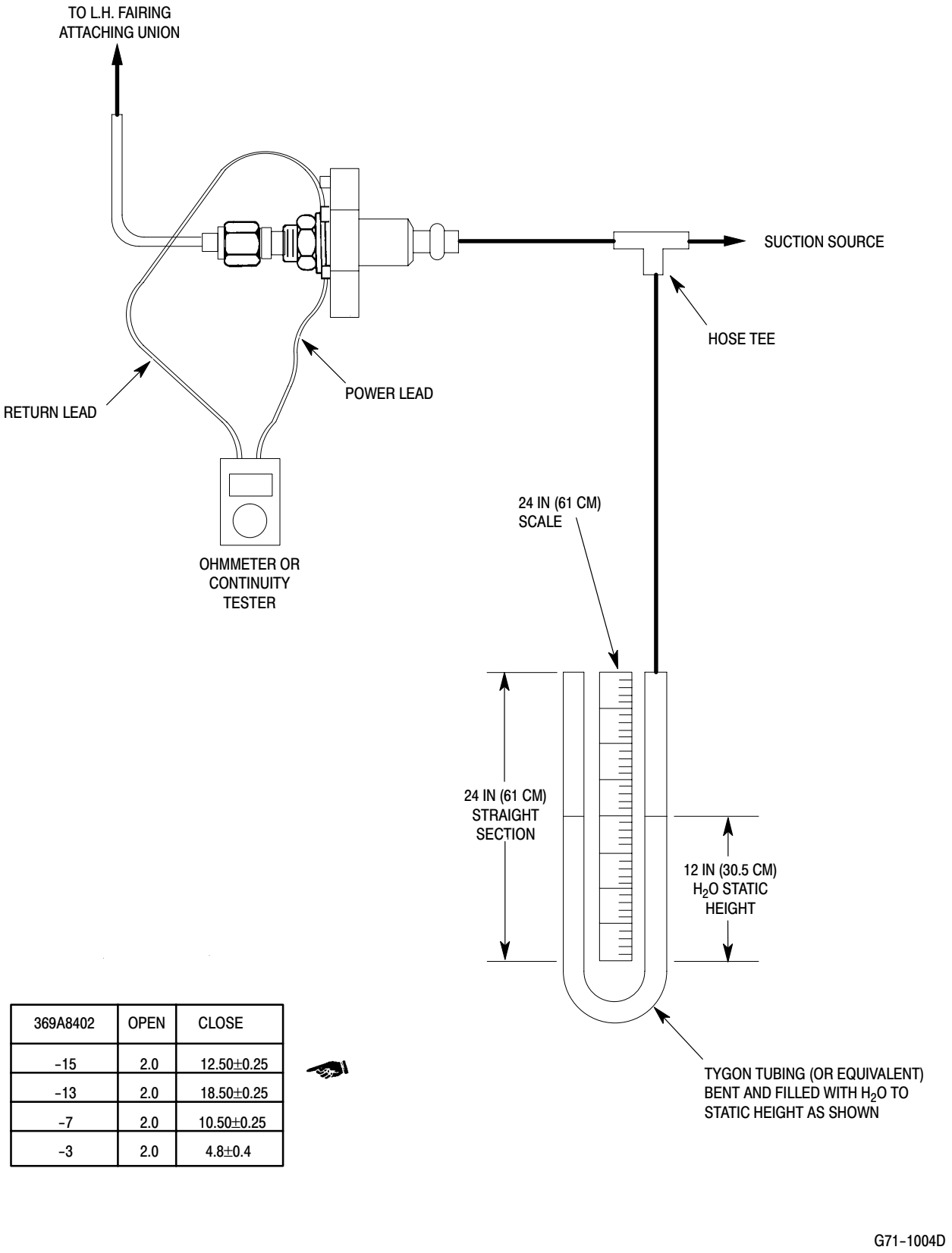

369A8402	OPEN	CLOSE
-15	2.0	12.50±0.25
-13	2.0	18.50±0.25
-7	2.0	10.50±0.25
-3	2.0	4.8±0.4

Figure 601. Air Pressure Sensing Switch Calibration Check

EXHAUST SYSTEM
MAINTENANCE PRACTICES

1. Description and Operation

The engine exhaust system consists of left and right tailpipes attached to the engine by two clamps and a flexible suspension system. Suspension hardware allows exhaust system thermal expansion and contraction. Movement is absorbed by a spring, upper and lower cushioned hanger assemblies and a pivoted link. The link suspends the tailpipes from an airframe fitting above the exhaust outlet.

2. Exhaust System Replacement

(Ref. Figure 201)

A. Exhaust System Removal

(1). Remove right side thermocouple hardware (Ref. View A).

(2). **(500N)** Remove clamp from around tailpipes.

(3). Remove tailpipe clamps.

(4). Remove airframe link attaching hardware.

(5). Remove two tailpipes as an assembly.

CAUTION Cover engine exhaust ducts to keep FOD out of turbine section.

(6). Install covers on engine exhaust outlets.

(7). Remove spring and hangers. Separate tailpipes.

B. Exhaust System Installation

Consumable Materials
(Ref. Section 91-00-00)

Item	Nomenclature
CM423	Sealant

(1). Remove exhaust duct covers.

CAUTION Support tailpipes during installation. Unsupported tailpipes could damage mounting flanges or result in clamp joint misalignment and subsequent exhaust gas leakage.

(2). Butt tailpipe flanges up to engine exhaust duct flanges and install clamps. Locate clamp T-bolts at 6 o'clock position. Install washers and nuts. Finger tighten clamp nuts.

NOTE: Use only corrosion resistant fasteners.

(3). Install lower hanger between tailpipe aft flanges. Attach tailpipe support link to airframe fitting. Install bolt, washers and nut. Finger tighten nut.

(4). Install upper hanger between tailpipe flanges.

(5). Attach spring hook to upper clip bushing with two captive washers on each side (Ref. View C).

(6). Attach lower spring hook to clip bushing between support link and thin washer (Ref. View D).

(7). Inject sealant (CM423) into cavity around spring attach points. Allow sealant to cure per manufacturers instructions.

(8). Torque engine/tailpipe clamp nuts to **15 - 18 inch-pounds (1.69 - 2.03 Nm)**.

(9). Tap around both clamps with a rawhide mallet to seat clamps on flanges. Retorque clamp nuts **15 - 18 inch-pounds (1.69 - 2.03 Nm)**.

(10). Continue tapping around clamp and retorquing clamp nut until nut no longer turns when specified torque is applied.

(11). Install thermocouple wire support on right tailpipe clamp T-bolt with one washer on each side of support. Install nut (Ref. View A). Install thermocouple wire, clamp, screw, washers and nut on support.

(12). Torque tailpipe support link nut to **12 - 15 inch-pounds (1.36 - 1.69 Nm)**. Install cotter pin.

(13). **(500N)** Install clamp around tailpipe.

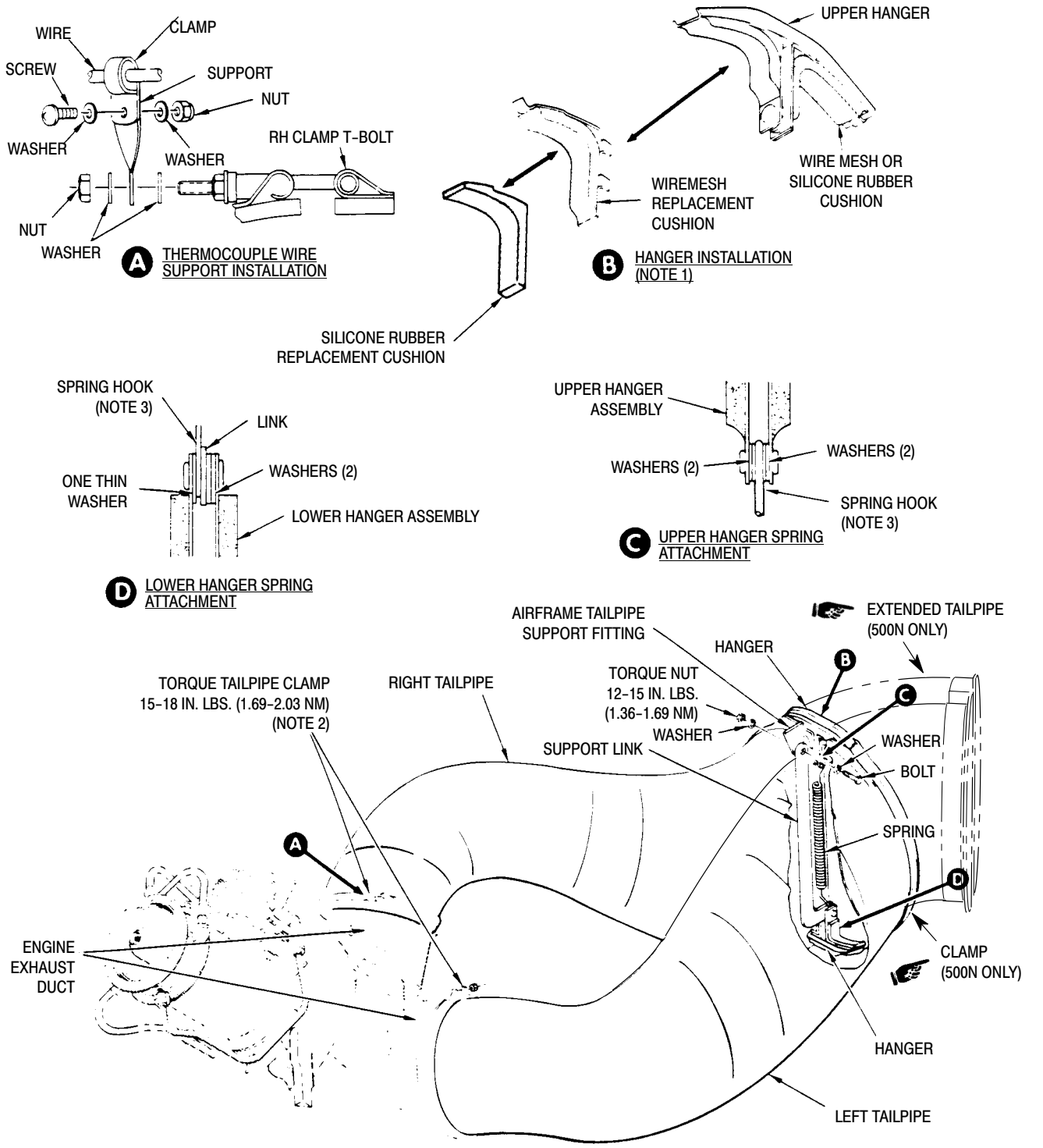

NOTES:
1. TYPICAL FOR UPPER AND LOWER HANGERS.
2. LOCATE T-BOLTS AT 6 O'CLOCK POSITION.
3. FILL CAVITY BETWEEN SPRING AND WASHERS WITH SEALANT (CM423).

G78-0002B

Figure 201. Exhaust System Installation

3. Exhaust System Inspection

(Ref. Figure 202)

A. Tailpipe Inspection

(1). Inspect tailpipe flanges and duct interior/exterior surfaces for cracks and broken weld seams.

(a). No cracks allowed across flange. Replace tailpipe.

(b). Weld seams may be repaired provided cracks meet limits in the following steps.

(c). Fluorescent penetrant inspect suspected cracks to determine crack ends and length.

(d). Nonintersecting single line cracks up to 2.00 inches (5.08 cm) long may be repaired if they do not affect the forward flange.

(e). Intersecting cracks of any length forming an acute angle and an unsupported section may not be repaired.

(2). Repair cracks or separations.

(3). Replace an unrepairable tail pipe.

(4). Inspect engine and tailpipe flanges for evidence of gas leakage.

(a). Gas leakage may be caused by flange misalignment, loose or improperly installed flange clamp, cracked, warped, nicked, dented, gouged or distorted flange areas or a combination of causes.

(5). Straighten flange distortions.

(6). Replace a tailpipe having a cracked forward flange.

(7). Inspect entire duct for dents, crimps, creases, wrinkles, sags and bulges.

(8). Repair distortions.

B. Supports and Fasteners Inspection

(1). Inspect hanger cushions for wear, tears and security.

(a). Inspect braided metal cushions for spotweld security.

(2). Replace damaged hanger cushions.

(3). Check spring for cracks, pits, nicks, kinks, gouges, evidence of overheating, wear and corrosion. Replace a spring showing such damage.

(a). Measure spring free length from hook center to hook center. Spring free length shall be 6.28 inches (15.951 cm). Replace a stretched spring.

(b). Anchor one end of spring. Attach an accurate weight scale to the other end. Stretch spring to 7.10 inches (18.034 cm), hook center to center. Spring tension at specified length must be 8-12 pounds (35.6-53.4 N). Replace a spring failing tension requirement.

(4). Inspect hanger/clip rivets and washers for security. Inspect spring hook bushings, washers and rivets for wear and security. Replace worn parts. Repair loose rivets.

(5). Inspect support link for cracks, corrosion and hole wear exceeding specifications (Ref. Figure 202).

(6). **(500N)** Inspect clamp around tailpipes for security and condition. Fiberglass wrap for fraying and condition of sealant at ends.

C. Clamp Inspection

CAUTION A failed exhaust duct clamp may present a serious inflight problem. Replace any clamp you think is in marginal condition.

(1). Inspect T-bolt threads for condition. Repair damaged threads.

(2). Check self locking nut for run-on torque resistance. Replace a worn nut.

(3). Inspect strap/channel spotwelds for security.

(4). Check strap for cracks, creases, bends, joggles and other evidence of fatigue. Replace clamps showing metal crystallization or cracks anywhere on the strap.

(5). Inspect clamp channels for cracks, spread or crimp (Ref. Figure 202).

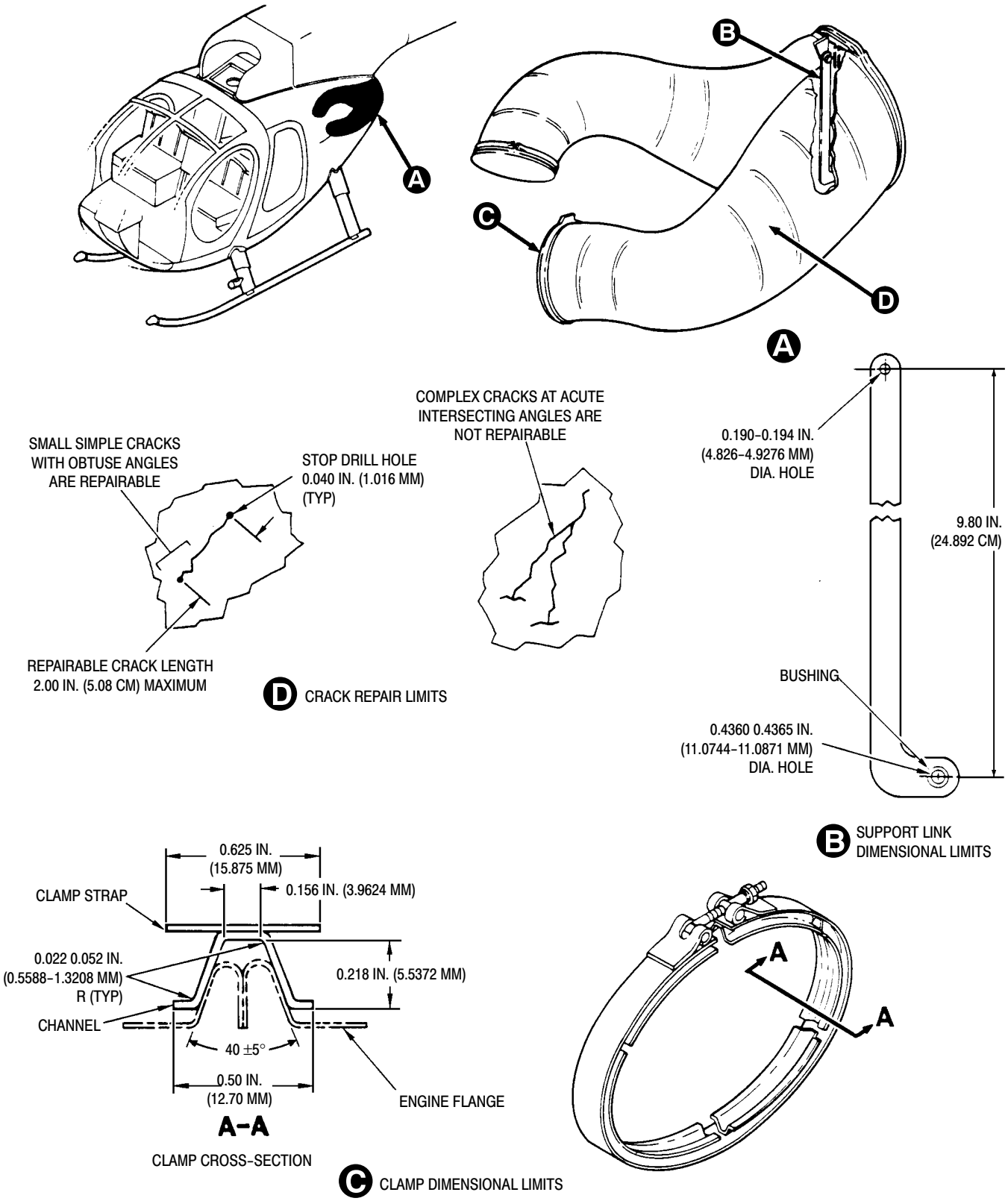

Figure 202. Exhaust System Inspection

EXHAUST SYSTEM
MAINTENANCE PRACTICES

1. Description and Operation

Engine exhaust is ducted through a tailpipe bolted to the engine exhaust duct flange and supported by a flexible link mounting attached to the aft fuselage. Figure 201 shows the exhaust system and mounting details.

2. Exhaust System Replacement

(Ref. Figure 201)

A. Exhaust System Removal

(1). Detach tailpipe from engine exhaust duct by removing:

(a). Six nuts, bolts, and 12 washers from exhaust pipe side flanges.

(b). Two nutplate strips, 14 bolts and washers from exhaust pipe fore and aft flanges.

(2). Loosen the tensioning bolt passing through the hanger torsion spring mandrel.

(3). Disengage the adjuster from the spring pin.

CAUTION Whenever tailpipes are removed, cover engine exhaust ducts with clean covers to prevent entry of foreign materials into turbine section of engine.

(4). Remove tailpipe and gasket.

(5). Visually inspect bottom of upper aft section firewall for contact marks with discoloration, holes or tears. Pay particular attention to firewall blanket retainer clips at Sta. 155.75 fuselage ring.

B. Exhaust System Installation

(1). Remove protective cover from engine exhaust duct.

(2). Install gasket onto engine exhaust flange.

CAUTION Support aft ends of tailpipe during installation. Displacement from proper mounting position may damage forward mounting flanges.

(3). Place tailpipe over engine exhaust duct and secure with nuts, nutplate strips, bolts and washers; torque bolts to **36 - 46 inch-pounds (4.07 - 5.20 Nm) plus drag torque.**

(4). Install duct with duct clamp link standing vertical.

(5). When viewed from left side of helicopter. turn torsion spring adjuster 150 ±15 degrees clockwise and engage spring pin in nearest hole in adjuster.

(6). Tighten tensioning bolt to adjust spring.

(7). Inspect for no contact between top of exhaust and firewall retainer clips at Sta. 155.75 fuselage ring.

NOTE: If installing a new exhaust gasket, the exhaust bolts should be retorqued after first flight. If bolts are found to be loose, retorque after every flight until bolts retain torque.

3. Exhaust System Inspection

(Ref. Figure 201)

(1). Inspect for cracks and broken weld seams.

(2). Inspect for dents and bends.

(3). Using flashlight and mirror, look in engine bay through engine access doors and look through engine oil filter access cutout.

(a). Inspect top of engine exhaust duct for contact marks and bottom of upper aft section firewall for contact marks with discoloration, holes or tears. Pay particular attention to firewall blanket retainer clips at Sta. 155.75 fuselage ring.

4. Exhaust System Repair

(Ref. Figure 201)

Consumable Materials
(Ref. Section 91-00-00)

Item	Nomenclature
CM824	Welding rod

(1). Repair dents and bends using a form block and suitable mallet.

(2). Repair cracks and breaks in tailpipes as follows:

(a). Using stainless steel brush, thoroughly clean at least 1 inch (2.54 cm) on all sides of cracked area. Cleaning should remove all carbon from both inner and outer surfaces and from crack itself.

(b). Weld, using inert arc method, with rod (CM824). Shield back side of weld with inert gas or suitable stainless steel flux.

(c). Repair single cracks less than 2 inches (5.08 cm) in length by stop-drilling 0.040 inch (1.016 mm) diameter hole at termination of each end of crack. This method of repair does not apply to intersecting cracks that form an acute angle leaving an unsupported section.