Manual: CSP–HMI–2, Handbook of Maintenance Instructions
Models: 369D/E/FF – 500/600N Helicopters
Issued: 31 October 1990
Revision 39: 11 April 2007
TR 07–001: 09 July 2007

FILING INSTRUCTIONS:

(1) Before inserting this change, ensure the manual is current.
Check the existing List of Effective Pages in the manual to ensure all prior revisions are inserted.
(Do not insert this revision if prior revisions are not inserted).

(2) Insert this page in front of Page A of the List of Effective Pages (LOEP).

(3) Incorporate this change by removing old pages and inserting new pages as indicated below.

Temporary Revision Number / Date	Section	Page	Page Revision
*TR 07–001 / 09 July 2007	05–20–00	3 and 4	TR 07–001
	53	i thru vi	TR 07–001
	53–50–30	205 thru 212	TR 07–001

* Signifies latest Temporary Revision.

This Page Intentionally Left Blank

Table 1. 100–Hour or Annual Inspection (Cont.)

Registration No._____ **Serial No.**_____			
Helicopter Hours_____ **Torque Events**_____			
Model	**Requirement**	**Chap/Sect**	**Initial**
500/600N	* Thruster cones and tip cap (500N only) for damage and security. Inspect for wear between thruster cones and tailboom at points of contact. * Using a flashlight and 10X magnifying glass, inspect horizontal stabilizer mounting brackets for cracks (pay particular attention to the forward inboard legs) (Ref. Tailboom Inspection). * Using a bright flashlight, inspect fore and aft radii of the lower portion of the three upper slot bridges for cracks, illuminate area under the flap. The flap may be raised slightly, using finger pressure only, to aid in checking this area (Ref. Tailboom Inspection). * Using a bright light and 10X magnifying glass, inspect the four tailboom attachment lugs for cracks and fiber damage. Pay particular attention to area on top of the lug from the radius block to 2 inches aft (Ref. Tailboom Inspection). * Tailboom closeout fairings for security of attachment hardware. Inspect for damage and chafing between closeout fairing and tailboom.	53–40–30 53–50–30	
369D/E/FF	Horizontal stabilizer for: * Skin damage and loose rivets. * Tip plates for damage. Check for secure attachments (Ref. Horizontal Stabilizer and Tip Plates Inspection).	53–50–10	
500/600N	Horizontal stabilizer for: * Skin damage and loose rivets. * Mounting fittings for cracks and security. * Stabilizer attach bolts for security.	53	
369D/E/FF	Vertical stabilizer for: * Damage to leading and trailing edges and damaged stressed side panels (no repair of side panels permitted). * Mounting fittings for cracks and security. * Tail skid for obvious damage and security (Ref. Vertical Stabilizer Inspection).	53–50–10	
500/600N	Vertical stabilizers for: * Damage to leading or trailing edges and damaged side panels. * Cracks in skin, no cracks permitted (pay particular attention to areas around mounting bolts). * Stabilizer attach bolts for security. * Stabilizer mount bushings for wear, security and correct installation. * Excess play in control linkage, bearings and security of attaching hardware.	53	

Table 1. 100-Hour or Annual Inspection (Cont.)

Registration No._____ **Serial No.**_____
Helicopter Hours_____ **Torque Events**_____

Model	Requirement	Chap/Sect	Initial
	LANDING GEAR		
ALL	Landing gear skid tubes and fairings for: * Wear and damage in excess of permissible limits. * Upper fairing fillets for freedom of movement and general condition. * Strut attachment points for security and pivot (swivel) bearings for excessive play. * Landing gear dampers for correct extension, security of attachment and for signs of fluid leakage. Pivot bearings for excessive play. * Passenger steps for security and damage.	32	
369D/E/FF 500N	Remove landing gear fairing fillets and visually inspect landing gear strut assemblies for cracks and damage.		
369D/E/FF 500N	For aircraft 369D; 001 & subs, 369E; 0001 thru 0528, 369FF; 0001 thru 0114 and 500N; 001 thru 077: Remove plug button from inboard of fairing assembly. Using a bright light and 10X magnifying glass, inspect rivet hole in underside of strut for cracks. If crack is found, strut must be scrapped.		
	CABIN		
ALL	Compartment heat and anti-icing valve controls for: * Easy and correct operation and rigging. * Heating system heat diffusers for security.	21	
ALL	* Seat belts for condition and security. * Inertia reels for condition and proper extension/retraction.	25	
ALL	Pilot/copilot controls for: * Wear, looseness and general condition of control rods and rod end bearings. * Quick-release pins for condition. * Cyclic, collective and anti-torque controls for free movement. * Cyclic trim actuators for security. * Collective torque tube, support bracket and bungee support bracket for evidence of cracks, gouges or other visible damage in attach lug and bungee support bracket attach areas; gaps between bracket and cradle cap of collective torque tube (use bright light and mirror). * N_1 power controls for obvious damage. * Check for minimum cyclic friction adjustment (resistance to turning spring with fingers). * Flight control system one-way lock (Uniloc) for oil leakage, condition and security. Fluid reservoir 1/2 - 3/4 full; replenish if low.	67 76	

TABLE OF CONTENTS

TABLE OF CONTENTS (Cont.)

TABLE OF CONTENTS (Cont.)

TABLE OF CONTENTS (Cont.)

TABLE OF CONTENTS (Cont.)

TABLE OF CONTENTS (Cont.)

4. Horizontal Stabilizer Eye Bolt Replacement

A. Horizontal Stabilizer Eye Bolt Removal

(1). Remove horizontal stabilizer.

(2). Remove eye bolts by holding the flat surface of eye bolt with a wrench and removing nut.

B. Horizontal Stabilizer Eye Bolt Installation

(1). Install eye bolts in horizontal stabilizer, the short eye bolts in the forward holes and the longer eye bolts with spacer to the aft holes of horizontal stabilizer.

(2). Torque eye bolts to **80 - 120 inch-pounds (9.04 - 13.56 Nm) plus drag torque**.

(3). Install horizontal stabilizer.

5. Horizontal/Vertical Stabilizer Control Tube and Bellcrank Replacement

(Ref. Figure 201 and Figure 202)

A. Horizontal/Vertical Stabilizer Control Tube and Bellcrank Removal

(1). Remove horizontal stabilizer end tip covers and center access cover for access to bellcranks and control tubes.

(2). Remove cotter pin, nut, washer and bolt from center bellcrank shaft. Index mark bellcrank with grease pencil in relationship to shaft. Disconnect bellcrank.

(3). Disconnect control tube from vertical stabilizer torque tube bellcrank. Remove controls from horizontal stabilizer as required for maintenance.

B. Horizontal/Vertical Stabilizer Control Tube and Bellcrank Installation

Refer to adjustment and test control rigging during installation.

(1). Connect bellcrank to center bellcrank shaft and install bolt, washers and nut. Torque bolt to standard aircraft torque values and install cotter pin.

(2). Install control tubes and bellcranks as required, safety wire or cotter pin.

(3). Install center access plate with seven screws and washers.

6. Vertical Stabilizer Inspection

(Ref. Figure 201 and Figure 202)

(1). Inspect skin for cracks, bonding separation, delamanation and obvious damage.

(2). Inspect stabilizer for freedom of movement through pedal travel range, check for clearance between vertical to horizontal.

(3). Check mounting fitting holes for elongation.

NOTE: Internal stabilizer fitting may display cracking after installation of expandable bolts. This cracking, internal fitting only, is acceptable for continued service. Cracking of the external skin from the mounting bolt holes is unacceptable and stabilizer must be removed from service and scrapped.

7. Vertical Stabilizer Repair

Refer to MDHI Field Service Representative.

8. Horizontal Stabilizer Inspection

(1). Inspect skin for cracks, bonding separation, delamination and obvious damage.

(2). Inspect mounting fitting and attachment hardware for condition.

(3). Inspect center access panel and nut plate fasteners for condition, end tip plate access covers and position lights for condition.

(4). Inspect vertical stabilizer torques tubes for excessive axial and radial movement, 0.010 inch (0.254 mm) axial end play maximum allowable.

(5). Inspect torque tube bushings for wear and security.

(6). If the bushings are not bonded to the horizontal stabilizer, rework Vertical Stabilizer Torque Tube Bushings.

9. Vertical Stabilizer Torque Tube Replacement

A. Vertical Stabilizer Torque Tube Removal

(1). Remove vertical stabilizers (Ref. Vertical Stabilizer Replacement).

(2). Remove horizontal tip plate access cover and disconnect YSAS torque tube (if installed) from vertical stabilizer bellcrank.

(3). Remove bellcrank from torque tube by removing expandable bolt.

(4). Remove cotter pin, locknut and bushing from torque tube. Remove torque tube by lifting upward.

B. Vertical Stabilizer Torque Tube Installation

(1). Slide torque tube from the top thru the horizontal stabilizer.

(2). Apply one layer of teflon tape (CM726) to threads of torque tube prior to installing locknut.

(3). Install locknut, hand tighten and adjust to a 0.005-0.010 inch (0.127-0.254 mm) gap; Install cotter pin.

NOTE: When installing the bellcrank, opening in bellcrank must face outboard.

(4). Install bellcrank, with opening facing outboard, on torque tube and install expandable bolt; Torque to **30 - 40 inch-pounds (3.39 - 4.52 Nm) plus drag torque**; Install cotter pin.

(5). Connect YSAS actuator to vertical stabilizer torque tube bellcrank. Torque nut to **30 - 40 inch-pounds (3.39 - 4.52 Nm)** and install cotter pin.

(6). Install end plate access covers.

(7). Install vertical stabilizer (Ref. Vertical Stabilizer Replacement).

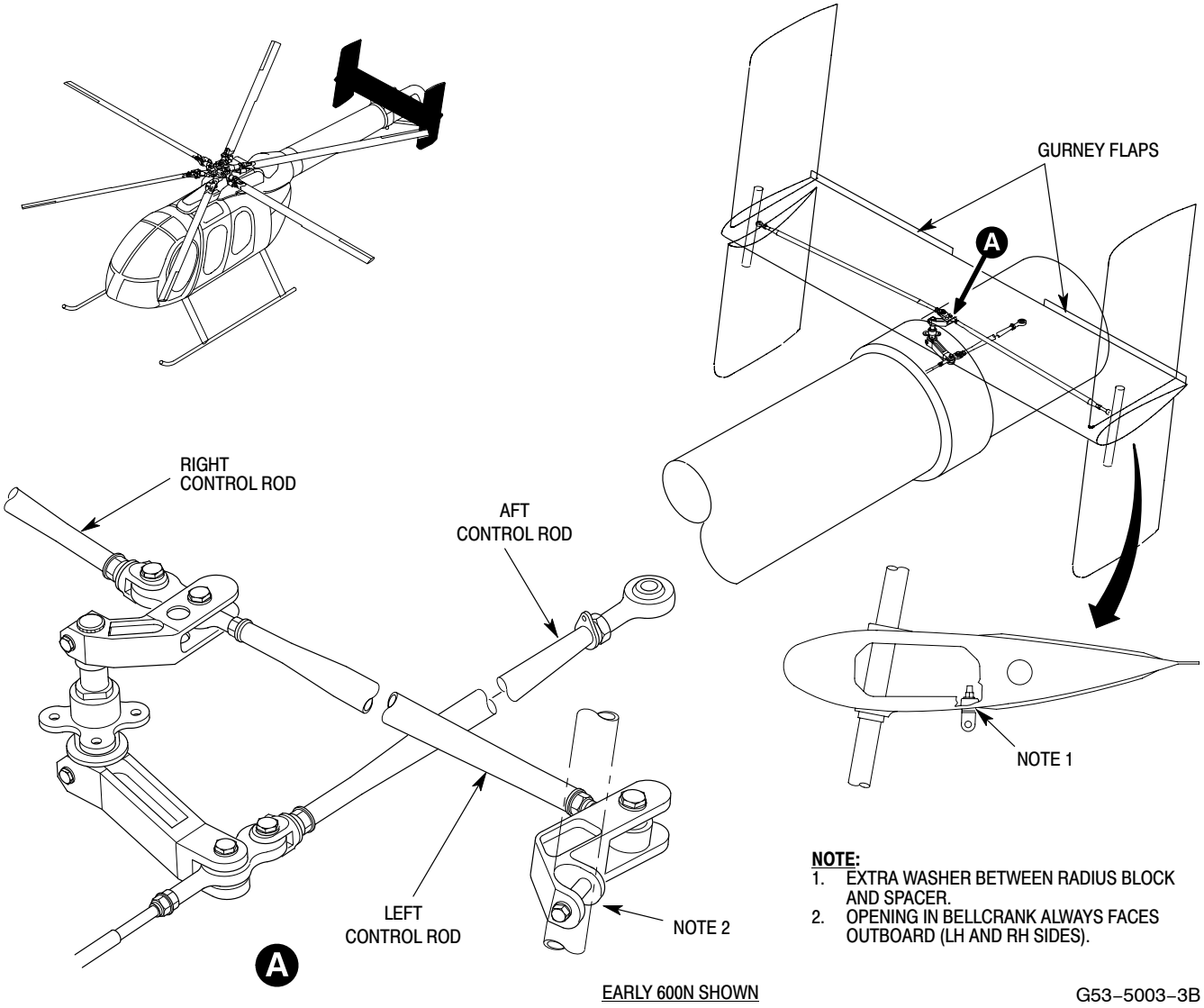

Figure 202. Stabilizer Installation without YSAS

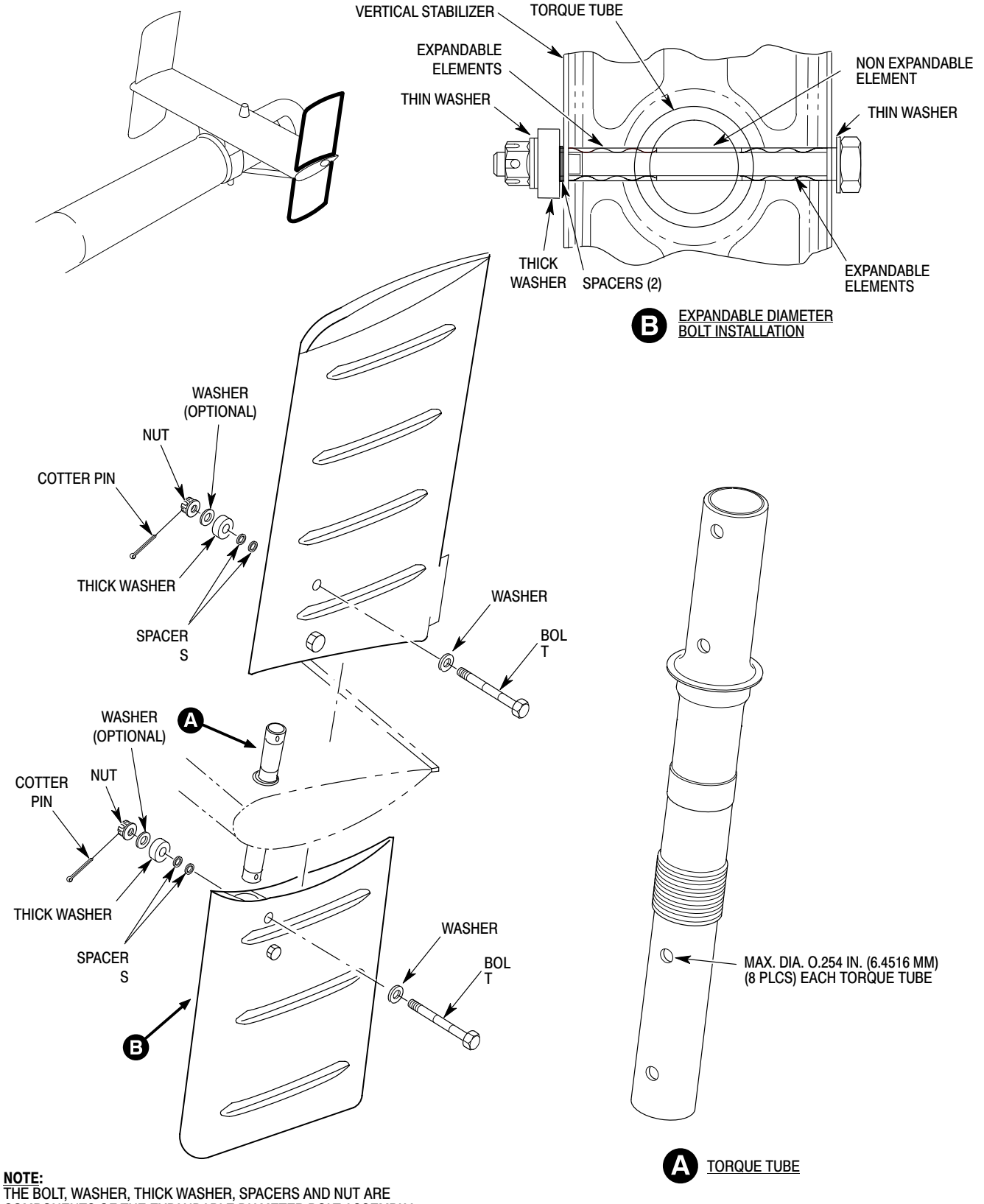

NOTE:
THE BOLT, WASHER, THICK WASHER, SPACERS AND NUT ARE COMPONENTS OF THE EXPANDABLE DIAMETER BOLT ASSEMBLY.

Figure 203. Vertical Stabilizer Installation with Expandable Bolts

10. Horizontal Stabilizer Repair

Refer to MDHI Field Service Representative.

11. Vertical Stabilizer Torque Tube and/or Bushing Replacement (Non-Bonded Bushings)

(Ref. Figure 201) The following procedure is for replacing the early style (non-bonded) torque tube bushings.

Consumable Materials (Ref. Section 91-00-00)

Item	Nomenclature
CM726	Tape, teflon

(1). Remove vertical stabilizers (Ref. Vertical Stabilizer Replacement).

(2). Remove horizontal tip plate access cover and disconnect YSAS torque tube (if installed) from vertical stabilizer bellcrank.

(3). Remove bellcrank from torque tube by removing expandable bolt.

(4). Remove cotter pin, locknut and bushing from torque tube. Remove torque tube by lifting upward.

(5). Remove bushing from bearing race of torque tube.

(6). Install one bushing on bearing race of torque tube and insert torque tube through fitting of horizontal stabilizer from the top downward.

(7). Apply one layer of teflon tape (CM726) to threads of torque tube prior to installing locknut.

(8). Install bushing and locknut, hand tighten locknut and adjust to a 0.005-0.010 inch (0.127-0.254 mm) gap; Install cotter pin.

NOTE: Ensure shouldered bushings are installed in bellcrank.

(9). Install bellcrank on torque tube and install expandable bolt and washers; Torque to **30 - 40 inch-pounds (3.39 - 4.52 Nm) plus drag torque**; Install cotter pin.

(10). Connect YSAS actuator to vertical stabilizer torque tube bellcrank. Torque nut to **30 - 40 inch-pounds (3.39 - 4.52 Nm)** and install cotter pin.

(11). Install end plate access covers.

(12). Install vertical stabilizer (Ref. Vertical Stabilizer Replacement).

12. Vertical Stabilizer Torque Tube and/or Bushing Replacement (Bonded Bushings)

(Ref. Figure 201) The following procedure is for replacing the current style (bonded) torque tube bushings.

Consumable Materials (Ref. Section 91-00-00)

Item	Nomenclature
CM222	1,1,1-Trichloroethane
CM402	Adhesive
CM726	Tape, teflon
CM802	Abrasive cloth, aluminum oxide

(1). Remove vertical stabilizers (Ref. Vertical Stabilizer Replacement).

(2). Remove horizontal tip plate access cover and disconnect YSAS torque tube (if installed) from vertical stabilizer bellcrank.

(3). Remove bellcrank from torque tube by removing expandable bolt.

(4). Remove cotter pin, locknut and bushing from torque tube. Remove torque tube by lifting upward.

CAUTION In the following steps, care must be taken to not damage the fibers of the horizontal stabilizer.

(5). Remove bushing(s) from horizontal stabilizer by gently working a sharp scraper between bushing and stabilizer.

(6). Sand excess sealant from horizontal stabilizer taking care not to disturb the composite fibers of the stabilizer.

(7). Clean faying surfaces of horizontal stabilizer, where bushings are to be

bonded, with 1,1,1-trichloroethane (CM222).

(8). Wipe dry using a clean dry rag and then allow to air dry for 15 minutes.

(9). Lightly abrade the faying surface of the new bushings with abrasive cloth (CM802) until all gloss is removed. Wipe clean with 1,1,1-trichloroethane.

(10). Wipe dry using a clean dry rag and then allow to air dry for 15 minutes.

(11). Mix adhesive (CM402) according to manufacturers instructions. Apply adhesive within 2 hours of cleaning.

(12). Apply a thin uniform layer of adhesive to faying surfaces.

CAUTION Do not apply too much pressure, damage to horizontal stabilizer may occur.

(13). Press the faying surfaces firmly together and maintain contact pressure or apply 50 psi (3.45 kPa) maximum for 24 hours at ambient temperature.

(14). Using 1,1,1-trichloroethane, clean excess adhesive from parts before adhesive has had time to cure.

(15). Slide torque tube from the top thru the horizontal stabilizer.

(16). Apply one layer of teflon tape (CM726) to threads of torque tube prior to installing locknut.

(17). Install locknut, hand tighten and adjust to a 0.005-0.010 inch (0.127-0.254 mm) gap; Install cotter pin.

(18). Install bellcrank on torque tube and install expandable bolt; Torque to **30 - 40 inch-pounds (3.39 - 4.52 Nm) plus drag torque**; Install cotter pin.

(19). Connect YSAS actuator to vertical stabilizer torque tube bellcrank. Torque nut to **30 - 40 inch-pounds (3.39 - 4.52 Nm)** and install cotter pin.

(20). Install end plate access covers.

(21). Install vertical stabilizer (Ref. Vertical Stabilizer Replacement).

13. Vertical Stabilizer Torque Tube Bushing Rework (Non-Bonded Bushings to Bonded Bushings)

(Ref. Figure 201) The following procedure is for converting the vertical stabilizer torque tube to the current 500N3980-3 bushings, 500N3970-3 locknuts and MS24665-361 cotter pins.

Consumable Materials
(Ref. Section 91-00-00)

Item	Nomenclature
CM222	1,1,1-Trichloroethane
CM402	Adhesive
CM726	Tape, teflon
CM802	Abrasive cloth, aluminum oxide

(1). Remove vertical stabilizers (Ref. Vertical Stabilizer Replacement).

(2). Remove cotter pins, locknuts and bushings, and scrap. Remove torque tube by lifting upward. Remove bushing and scrap.

(3). Clean faying surfaces of horizontal stabilizer, where bushings are to be bonded, with 1,1,1-trichloroethane (CM222).

(4). Wipe dry using a clean dry rag and then allow to air dry for 15 minutes.

(5). Lightly abrade the faying surface of the new bushings with abrasive cloth (CM802) until all gloss is removed. Wipe clean with 1,1,1-trichloroethane.

(6). Wipe dry using a clean dry rag and then allow to air dry for 15 minutes.

(7). Mix adhesive (CM402) according to manufacturers instructions. Apply adhesive within 2 hours of cleaning.

(8). Apply a thin uniform layer of adhesive to faying surfaces.

CAUTION Do not apply too much pressure, damage to horizontal stabilizer may occur.

(9). Press the faying surfaces firmly together and maintain contact pressure or apply 50 psi (3.45 kPa) maximum for 24 hours at ambient temperature.

(10). Using 1,1,1-trichloroethane, clean excess adhesive from parts before adhesive has had time to cure.

(11). Slide torque tube from the top thru the horizontal stabilizer.

(12). Apply one layer of teflon tape (CM726) to new 500N3970-3 locknut.

(13). Install locknut, hand tighten and adjust to a 0.005-0.010 inch (0.127-0.254 mm) gap; Install MS24665-361 cotter pin.

(14). Install bellcrank on torque tube and install expandable bolt; Torque to **30 - 40 inch-pounds (3.39 - 4.52 Nm) plus drag torque**; Install cotter pin.

(15). Install end plate access covers.

(16). Install vertical stabilizer (Ref. Vertical Stabilizer Replacement).

14. Vertical Stabilizer Torque Tube Bearing Race Replacement

(Ref. Figure 201) The following procedure is for removal of the bearing race from the vertical stabilizer torque tube. Some special tools will need to be manufactured for this procedure.

Consumable Materials
(Ref. Section 91-00-00)

Item	Nomenclature
CM234	Solvent, dry-cleaning
CM318	Primer
CM730	Tape, duct

Special Tools
(Ref. Section 91-00-00)

Item	Nomenclature
N/A	Arbor press

(1). Remove vertical stabilizers (Ref. Vertical Stabilizer Replacement).

(2). Remove vertical stabilizer torque tubes (Ref. Vertical Stabilizer Torque Tube Replacement).

(3). Fabricate the following tool for bearing race removal.

(a). Locate a steel plate of approximately 0.250 inch (6.35 mm) thickness.

(b). Drill a 1.510 inch (38.3540 mm) hole in the plate.

(c). Deburr edges of hole to prevent damage to torque tube.

(d). Apply tape (CM730) to tool to prevent damage to bearing race.

(4). Insert torque tube through the removal tool and install on arbor press.

CAUTION In the following steps, care must be taken to not damage the horizontal stabilizer torque tube.

(5). Place suitable device over torque tube end to protect tube from damage from arbor press.

(6). Remove bearing from the torque tube by gently pressing torque tube through the removal tool.

(7). Using solvent (CM234), clean primer residue from torque tube.

(8). Inspect torque tube for damage to bearing race contact surface.

(9). Fabricate the following tool for bearing race installation.

(a). Locate a steel plate of approximately 0.250 inch (6.35 mm) thickness.

(b). Drill a 1.390 inch (35.306 mm) hole in the plate.

(c). Deburr edges of hole to prevent damage to torque tube.

(d). Apply tape (CM730) to tool to prevent damage to bearing race.

(10). Insert bearing race into tool and mount on arbor press.

(11). Coat torque tube bearing race mating surface with primer (CM318).

CAUTION In the following steps, care must be taken to not damage the the horizontal stabilizer torque tube.

(12). Place suitable device over torque tube end to protect tube from damage from arbor press.

CAUTION In the following step, ensure bearing race is not cocked on torque tube, this will cause non-repairable damage to bearing race and torque tube.

(13). While primer is wet, press torque tube down through the bearing race until bearing race is tight against flange on torque tube.

(14). Inspect bearing race flanged surface to ensure no warpage occurred during installation.

(15). Reinstall vertical stabilizer torque tubes (Ref. Vertical Stabilizer Torque Tube Replacement).

(16). Reinstall vertical stabilizers (Ref. Vertical Stabilizer Replacement).

15. Stabilizer Troubleshooting

(Ref. Table 201)

Table 201. Troubleshooting Tailboom and Tail Surfaces

Symptom	Probable Trouble	Corrective Action
High frequency vibration	Fan assembly out of balance	Re–balance fan assembly.
	Loose fan blades	Replace and re–balance fan assy.
	Loose bolts/nuts on Horizontal or Vertical stabilizer	Inspect mounting hardware; adjust or replace as necessary.

NOTE: High frequency vibrations in helicopter can be caused by components in other systems (Ref. Sec. 64–00–00, 63–25–10, 63–25–30 and 71–00–00).