Manual: CSP-HMI-2, Handbook of Maintenance Instructions
Models: 369D/E/FF - 500/600N Helicopters
Issued: 31 October 1990
Revision 40: 10 November 2007

FILING INSTRUCTIONS:

1. Before inserting this change, ensure the manual is current.
   Check the existing List of Effective Pages in the manual to ensure all prior revisions are inserted. **(Do not insert this revision if prior revisions are not inserted)**.
2. Incorporate this change by removing old pages and inserting new pages as indicated below.

Remove Pages	Insert Pages
Cover/Title	
Cover/Title	Cover/Title
Temporary Revision	
1 and 2	1 and 2
List of Effective Pages	
A thru J	A thru J
01–00–00	
201 and 202	201 and 202
04–00–00	
3 and 4	3 and 4
05–10–00	
1 and 2	1 and 2
05–20–00	
3 and 4	3 and 4
20–90–00	
201 thru 204	201 thru 204
53	
i thru vi	i thru vi
53–50–10	
205 and 206	205 and 206
53–50–30	
205 thru 212	205 thru 212
62–10–00	
605 and 606	605 and 606
62–20–00	
817 and 818	817 and 818

Remove Pages	Insert Pages
63–25–10	
203 and 204	203 and 204
64	
i thru iv	i thru iv
64–25–30	
805 and 806	805 and 806
64–30–00	
205 and 206	205 and 206
67–10–20	
203 and 204	203 and 204
91–00–00	
15 thru 20	15 thru 22

This Page Intentionally Left Blank

MDHI MODEL HELICOPTERS

MODELS 369D/E/FF – 500/600N

Basic Handbook of Maintenance Instructions

(CSP–HMI–2)

SERVICING AND MAINTENANCE

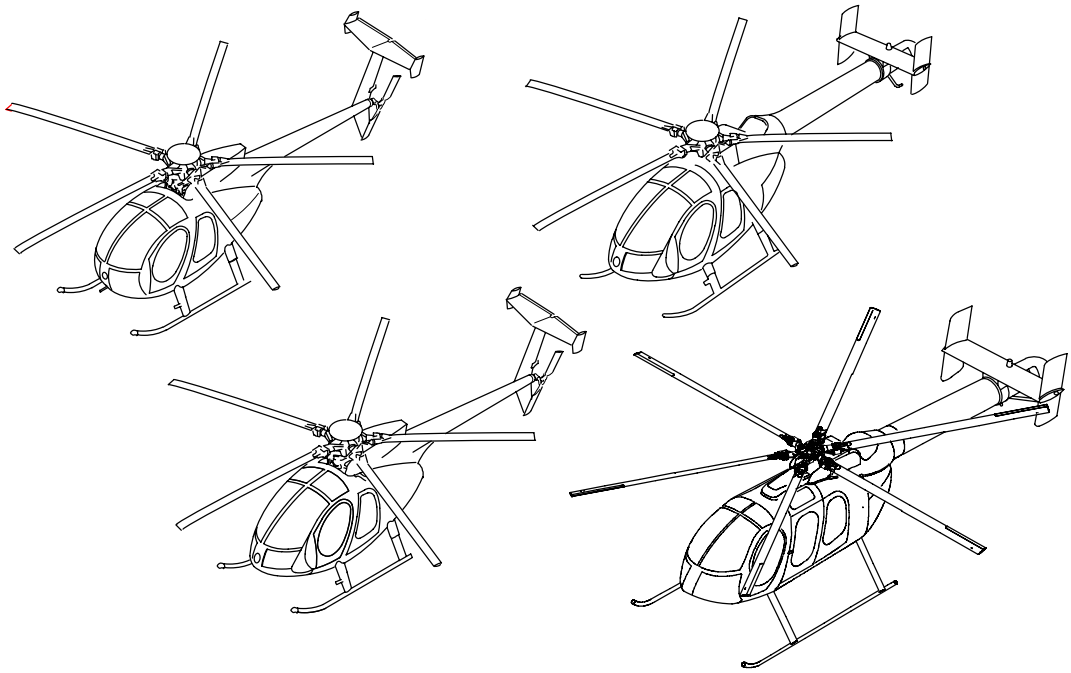

MD Helicopters, Inc.
4555 East McDowell Road
Mesa, Arizona 85215–9734

Copyright © 1999-2007 by MD Helicopters, Inc.
All rights reserved under the copyright laws.

Issued: 31 October 1990
Revision No. 40: 10 November 2007

PROPRIETARY RIGHTS NOTICE

The technical data and information contained in this publication is the property of and proprietary to MD Helicopters, Inc. and is not to be disclosed or reproduced in whole or in part without the written consent of MD Helicopters, Inc.

RESTRICTED USE

MDHI provides this manual for use by owners, operators and maintainers of MDHI products and authorized parts. Use by STC or PMA applicants or holders as documentation to support their certificates is not an authorized use of this manual and is prohibited. MDHI takes no responsibility for customer's use of parts manufactured under an STC or PMA when this manual is used as documentation with the Federal Aviation Administration to justify the STC or PMA. Use of unauthorized parts on MDHI products will void the MDHI warranty offered to the customer on components and may void the warranty on the helicopter.

MD Helicopters, Inc.
4555 East McDowell Road
Mesa, Arizona 85215–9734

MD HELICOPTERS INC.

RECORD OF TEMPORARY REVISIONS

MANUAL TITLE: CSP-HMI-2 MAINTENANCE MANUAL

REV. NO.	DATE INSERTED	BY	REMOVED BY INCORPORATING
91–001	08–12–91		Revision 3
91–002	11–05–91		Revision 4
92–001	02–20–92		Revision 5
92–002	03–16–92		
92–003	03–23–92		
92–004	05–20–92		
92–005	11–20–92		Revision 6
93–001			Revision 7
93–002	05–27–93		Revision 8
93–003			Revision 9
93–004			
93–005			
93–006			
94–001	01–21–94		
94–002	10–24–94		Revision 11
95–001			Revision 12
95–002			Revision 13
95–003			
96–001			
96–002	04–24–96		
97–001	07–02–97		Revision 18
97–002	08–19–97		
98–001	03–25–98		Revision 20
98–002	06–22–98		Revision 21
98–003	08–03–98		
98–004			Revision 22
98–005			
99–001	02–17–99		
01–001	08–10–01		Revision 31
02–001	01–23–02		Revision 32
02–002	01–30–02		

REV. NO.	DATE INSERTED	BY	REMOVED BY INCORPORATING
03–001	06–18–03		Revision 34
03–002	06–25–03		
03–003	12–18–03		Revision 35
03–004	01–09–04		
04–001	05–28–04		Revision 36
05–001	03–18–05		Revision 37
05–002	12–16–05		Revision 38
06–001	07–05–06		Revision 39
07–001	07–09–07		Revision 40

This Page Intentionally Left Blank

LIST OF EFFECTIVE PAGES

INSERT LATEST CHANGE PAGES, DESTROY SUPERSEDED PAGES

The highest revision number indicates pages changed, added or removed by the current change.

Date of original and revision pages are:

Original	31 October 1990
Revision 1	29 March 1991
Revision 2	10 May 1991
Revision 3	09 September 1991
Revision 4	20 January 1992
Revision 5	24 August 1992
Revision 6	21 December 1992
Revision 7	01 June 1993
Revision 8	23 July 1993
Revision 9	22 April 1994
Revision 10	26 September 1994
Revision 11	18 January 1995
Revision 12	06 October 1995
Revision 13	31 May 1996
Revision 14	13 September 1996
Revision 15	15 November 1996
Revision 16	06 January 1997
Revision 17	24 February 1997
Revision 18	17 October 1997
Revision 19	16 December 1997
Revision 20	01 June 1998
Revision 21	24 August 1998
Revision 22	10 March 1998
Revision 23	01 June 1999
Revision 24	07 December 1999
Revision 25	28 April 2000
Revision 26	17 August 2000
Revision 27	09 October 2000
Revision 28	30 November 2000
Revision 29	11 May 2001
Revision 30	11 July 2001
Revision 31	05 November 2001
Revision 32	18 March 2002
Revision 33	24 June 2002
Revision 34	21 August 2003
Revision 35	20 May 2004
Revision 36	11 November 2004
Revision 37	13 December 2005
Revision 38	25 May 2006
Revision 39	10 April 2007
Revision 40	10 November 2007

Cover/Title

Cover/Title . . . . . Revision 40

Change Request

CRi and CRii . . . . . N/A

Temporary Revision

1 and 2 . . . . . Revision 40

List of Effective Pages

A thru J . . . . . Revision 40

Table of Contents

i and ii . . . . . Revision 29
iii . . . . . Revision 34
iv . . . . . Revision 38
v and vi . . . . . Revision 29

Bulletins

1 . . . . . Revision 23
2 . . . . . Revision 24
3 and 4 . . . . . Revision 23
5 and 6 . . . . . Revision 24
7 . . . . . Revision 39
8 . . . . . Revision 23
9/(10 blank) . . . . . Revision 24

Chapter 01

i/(ii blank) . . . . . Revision 26

01–00–00

1 . . . . . Revision 26
2 thru 4 . . . . . Revision 23
5 and 6 . . . . . Revision 26
7 . . . . . Revision 29
8 . . . . . Revision 28
201 . . . . . Revision 23
202 . . . . . Revision 40
203 . . . . . Revision 23
204 . . . . . Revision 26
205 thru 208 . . . . . Revision 23
209 . . . . . Revision 36
210 . . . . . Revision 30
211 and 212 . . . . . Revision 36

Chapter 04
i and ii . . . . . Revision 34
04–00–00
1 thru 3 . . . . . Revision 39
4 . . . . . Revision 40
5 thru 14 . . . . . Revision 39
04–00–01
1/(2 blank) . . . . . Revision 26
Chapter 05
i and ii . . . . . Revision 38
05–00–00
1 thru 4 . . . . . Revision 38
05–10–00
1 . . . . . Revision 34
2 . . . . . Revision 40
3 . . . . . Revision 37
4 . . . . . Revision 34
05–20–00
1 . . . . . Revision 35
2 . . . . . Revision 39
3 thru 6 . . . . . Revision 35
7 thru 12 . . . . . Revision 39
05–20–10
1 thru 3 . . . . . Revision 39
4 . . . . . Revision 38
05–20–15
1 . . . . . Revision 29
2 and 3/(4 blank) . . . . . Revision 31
05–20–20
1 . . . . . Revision 36
2 thru 4 . . . . . Revision 37
5 . . . . . Revision 38
6 . . . . . Revision 36
05–50–00
1 thru 7 . . . . . Revision 24
8 . . . . . Revision 26
9 and 10 . . . . . Revision 34
Chapter 06
i and ii . . . . . Revision 34
06–00–00
201 thru 205 . . . . . Revision 23
206 . . . . . Revision 39
207 thru 210 . . . . . Revision 23
211 . . . . . Revision 36
212 . . . . . Revision 34
Chapter 07
i/(ii blank) . . . . . Revision 23
07–00–00
201 thru 206 . . . . . Revision 23
Chapter 08
i/(ii blank) . . . . . Revision 23
08–00–00
201 thru 203/(204 blank) . . . . . Revision 23
08–10–00
201 . . . . . Revision 39
202 and 203 . . . . . Revision 27
204 thru 210 . . . . . Revision 23
211 . . . . . Revision 36
212 thru 217/(218 blank) . . . . . Revision 23
Chapter 09
i/(ii blank) . . . . . Revision 23
09–00–00
201 thru 204 . . . . . Revision 23
Chapter 10
i/(ii blank) . . . . . Revision 23
10–10–00
201 thru 204 . . . . . Revision 23
10–20–00
201 thru 203/(204 blank) . . . . . Revision 23
10–30–00
201 thru 206 . . . . . Revision 23
Chapter 11
i/(ii blank) . . . . . Revision 23
11–00–00
201 thru 217/(218 blank) . . . . . Revision 23
11–40–00
201 thru 211/(212 blank) . . . . . Revision 23
Chapter 12
i . . . . . Revision 23
ii . . . . . Revision 32
12–00–00
301 and 302 . . . . . Revision 23
303 . . . . . Revision 24
304 . . . . . Revision 34
305 . . . . . Revision 26
306 and 307 . . . . . Revision 24
308 . . . . . Revision 26
309 . . . . . Revision 23
310 and 311 . . . . . Revision 32
312 . . . . . Revision 23

Chapter 18
i thru iii/(iv blank) . . . . . Revision 23
18–10–00
201 . . . . . Revision 23
202 . . . . . Revision 31
203 and 204 . . . . . Revision 37
401 thru 404 . . . . . Revision 23
501 . . . . . Revision 23
502 . . . . . Revision 34
503 thru 505 . . . . . Revision 23
506 and 507 . . . . . Revision 24
508 and 509 . . . . . Revision 23
510 . . . . . Revision 39
18–10–60
201 . . . . . Revision 23
202 and 203/(204 blank) . . . . . Revision 31
401 thru 404 . . . . . Revision 23
501 . . . . . Revision 23
502 . . . . . Revision 34
503 thru 509 . . . . . Revision 23
510 . . . . . Revision 37
511 and 512 . . . . . Revision 23
18–20–00
201 . . . . . Revision 34
202 and 203 . . . . . Revision 23
204 . . . . . Revision 34
205 . . . . . Revision 39
206 . . . . . Revision 23
18–20–30
201 thru 205/(206 blank) . . . . . Revision 23
Chapter 20
i and ii . . . . . Revision 38
20–10–00
201 thru 206 . . . . . Revision 38
20–20–00
201 and 202 . . . . . Revision 23
20–30–00
201 and 202 . . . . . Revision 23
203 thru 206 . . . . . Revision 34
20–40–00
201 thru 203 . . . . . Revision 23
20–90–00
201 . . . . . Revision 38
202 thru 204 . . . . . Revision 40
Chapter 21
i and ii . . . . . Revision 23
21–10–00
201 thru 204 . . . . . Revision 23
21–40–00
201 thru 207 . . . . . Revision 23
208 . . . . . Revision 27
209 . . . . . Revision 37
210 . . . . . Revision 23
901 thru 911/(912 blank) . . . . . Revision 23
Chapter 25
i . . . . . Revision 24
ii thru vii/(viii blank) . . . . . Revision 23
25–00–00
1 and 2 . . . . . Revision 23
25–10–00
201 thru 205 . . . . . Revision 23
206 . . . . . Revision 24
207 and 208 . . . . . Revision 23
25–15–00
201 thru 204 . . . . . Revision 23
901 and 902 . . . . . Revision 23
25–20–00
201 thru 211/(212 blank) . . . . . Revision 23
25–21–00
201/(202 blank) . . . . . Revision 23
901 thru 908 . . . . . Revision 23
25–30–00
201 thru 214 . . . . . Revision 23
25–40–00
201 thru 207/(208 blank) . . . . . Revision 23
25–50–00
101 thru 106 . . . . . Revision 23
401 thru 408 . . . . . Revision 23
601 and 602 . . . . . Revision 23
901 thru 907/(908 blank) . . . . . Revision 23
25–60–00
201 and 202 . . . . . Revision 23
25–63–00
201 thru 216 . . . . . Revision 23
901 thru 910 . . . . . Revision 23
Chapter 26
i/(ii blank) . . . . . Revision 23
26–10–00
201 thru 203/(204 blank) . . . . . Revision 23

26-20-00
201 and 202 . . . . . Revision 23

Chapter 28
i . . . . . Revision 19
ii . . . . . Revision 37
iii and iv . . . . . Revision 28
v thru vii/(viii blank) . . . . . Revision 31

28-00-00
1 and 2 . . . . . Revision 19
101 . . . . . Revision 29
102 and 103 . . . . . Revision 19
104 . . . . . Revision 23
201 and 202 . . . . . Revision 19
401 thru 414 . . . . . Revision 19
415 and 416 . . . . . Revision 36
417 thru 422 . . . . . Revision 19
501 thru 504 . . . . . Revision 19
505 . . . . . Revision 36
506 . . . . . Revision 19
507 . . . . . Revision 29
508 thru 510 . . . . . Revision 19
601 thru 603 . . . . . Revision 19
604 . . . . . Revision 28
605 thru 607/(608 blank) . . . . . Revision 19
801 thru 807/(808 blank) . . . . . Revision 19

28-00-60
1 thru 3/(4 blank) . . . . . Revision 19
101 . . . . . Revision 29
102 . . . . . Revision 19
103/(104 blank) . . . . . Revision 21
201 . . . . . Revision 32
202 . . . . . Revision 39
401 thru 405 . . . . . Revision 19
406 and 407 . . . . . Revision 34
408 thru 422 . . . . . Revision 19
501 and 502 . . . . . Revision 22
503/(504 blank) . . . . . Revision 21
601 . . . . . Revision 19
602 thru 606 . . . . . Revision 31
801 thru 805/(806 blank) . . . . . Revision 19

28-25-00
1 . . . . . Revision 39
2 . . . . . Revision 20
101/(102 blank) . . . . . Revision 20
201 and 202 . . . . . Revision 20
203 thru 205/(206 blank) . . . . . Revision 19
601 and 602 . . . . . Revision 20
603 thru 605/(606 blank) . . . . . Revision 19
901 and 902 . . . . . Revision 20
903 . . . . . Revision 28
904 thru 918 . . . . . Revision 19

Chapter 32
i . . . . . Revision 19
ii thru vi . . . . . Revision 26

32-10-00
1/(2 blank) . . . . . Revision 19
301 thru 308 . . . . . Revision 19
401 and 402 . . . . . Revision 19
403 and 404 . . . . . Revision 26
405 . . . . . Revision 19
406 and 407/(408 blank) . . . . . Revision 26
601 . . . . . Revision 31
602 thru 605/(606 blank) . . . . . Revision 26
801 thru 805 . . . . . Revision 19
806 and 807/(808 blank) . . . . . Revision 26
901 thru 908 . . . . . Revision 19

32-10-60
1/(2 blank) . . . . . Revision 19
301 thru 303/(304 blank) . . . . . Revision 19
401 . . . . . Revision 19
402 . . . . . Revision 26
403 . . . . . Revision 34
404 . . . . . Revision 20
405 and 406 . . . . . Revision 19
407/(408 blank) . . . . . Revision 20
601 . . . . . Revision 31
602 . . . . . Revision 19
603/(604 blank) . . . . . Revision 22
801 thru 803/(804 blank) . . . . . Revision 19

32-40-00
201 thru 206 . . . . . Revision 19

32-40-60
201 and 202 . . . . . Revision 19

32-81-00
201 thru 204 . . . . . Revision 19
901 thru 910 . . . . . Revision 19

32-82-00
201 thru 206 . . . . . Revision 19
401 thru 407/(408 blank) . . . . . Revision 19
901 thru 912 . . . . . Revision 19

Chapter 52
i thru iv . . . . . Revision 36

52–10–00
201 thru 213 . . . . . Revision 25
214 thru 216 . . . . . Revision 36
217 . . . . . Revision 25
218 thru 224 . . . . . Revision 36
52–40–00
201 thru 205/(206 blank) . . . . . Revision 18
52–50–00
201 thru 206 . . . . . Revision 18
207 . . . . . Revision 31
208 thru 210 . . . . . Revision 18

Chapter 53

i thru vi . . . . . Revision 40
53–00–00
201 . . . . . Revision 19
202 . . . . . Revision 37
203 . . . . . Revision 19
204 . . . . . Revision 20
53–10–00
201 thru 206 . . . . . Revision 19
53–20–00
201 thru 203/(204 blank) . . . . . Revision 19
53–30–00
201 . . . . . Revision 35
202 and 203 . . . . . Revision 19
204 thru 214 . . . . . Revision 38
53–30–30
201 . . . . . Revision 26
202 thru 210 . . . . . Revision 34
53–40–00
201 thru 204 . . . . . Revision 19
53–40–30
201 . . . . . Revision 36
202 . . . . . Revision 19
203 . . . . . Revision 22
204 . . . . . Revision 19
205 and 206 . . . . . Revision 39
53–50–10
201 and 202 . . . . . Revision 19
203 . . . . . Revision 22
204 and 205 . . . . . Revision 37
206 and 207/(208 blank) . . . . . Revision 19
53–50–30
201 . . . . . Revision 30
202 . . . . . Revision 32
203 and 204 . . . . . Revision 33
205 and 206 . . . . . Revision 34
207 . . . . . Revision 29
208 thru 212 . . . . . Revision 34

Chapter 62

i thru viii . . . . . Revision 37
62–00–00
101 . . . . . Revision 20
102 . . . . . Revision 31
62–10–00
401 thru 403/(404 blank) . . . . . Revision 20
601 thru 605 . . . . . Revision 20
606 . . . . . Revision 40
607 . . . . . Revision 20
608 . . . . . Revision 33
609 . . . . . Revision 29
610 and 611 . . . . . Revision 35
612 . . . . . Revision 20
801 . . . . . Revision 33
802 thru 808 . . . . . Revision 20
809 . . . . . Revision 34
810 and 811/(812 blank) . . . . . Revision 20
62–20–00
401 . . . . . Revision 36
402 and 403 . . . . . Revision 20
404 . . . . . Revision 36
405 and 406 . . . . . Revision 20
601 and 602 . . . . . Revision 20
603 . . . . . Revision 29
604 . . . . . Revision 25
605 thru 607 . . . . . Revision 20
608 . . . . . Revision 37
609 and 610 . . . . . Revision 20
801 . . . . . Revision 20
802 . . . . . Revision 34
803 thru 810 . . . . . Revision 20
811 thru 813 . . . . . Revision 37
814 . . . . . Revision 21
815 . . . . . Revision 35
816 . . . . . Revision 34
817 and 818 . . . . . Revision 40
819 and 820 . . . . . Revision 37
62–20–60
401 . . . . . Revision 36
402 . . . . . Revision 20
403 and 404 . . . . . Revision 36

405/(406 blank) . . . . . Revision 20
601 and 602 . . . . . Revision 20
603 . . . . . Revision 33
604 . . . . . Revision 20
605 . . . . . Revision 34
606 and 607 . . . . . Revision 33
608 . . . . . Revision 20
609 . . . . . Revision 25
610 . . . . . Revision 20
801 thru 804 . . . . . Revision 20
805 thru 808 . . . . . Revision 37
809 . . . . . Revision 22
810 . . . . . Revision 37
811 . . . . . Revision 22
812 and 813 . . . . . Revision 34
814 . . . . . Revision 37

62–30–00

401 . . . . . Revision 20
402 . . . . . Revision 36
403 and 404 . . . . . Revision 31
405 . . . . . Revision 36
406 . . . . . Revision 27
407 and 408 . . . . . Revision 35
601 and 602 . . . . . Revision 32
801 thru 807/(808 blank) . . . . . Revision 20

62–30–60

401 . . . . . Revision 20
402 . . . . . Revision 27
403 . . . . . Revision 31
404 thru 406 . . . . . Revision 35
407/(408 blank) . . . . . Revision 20
601 and 602 . . . . . Revision 32
801 and 802 . . . . . Revision 20

Chapter 63

i thru x . . . . . Revision 36

63–00–00

101 . . . . . Revision 28
102 . . . . . Revision 29
103 . . . . . Revision 30
104 . . . . . Revision 28

63–10–00

401 thru 403 . . . . . Revision 20
404 . . . . . Revision 36
405 . . . . . Revision 27
406 . . . . . Revision 32
407 . . . . . Revision 20
408 . . . . . Revision 32
409 . . . . . Revision 39
410 . . . . . Revision 32
411 . . . . . Revision 34
412 thru 414 . . . . . Revision 32
601 . . . . . Revision 26
602 . . . . . Revision 20
603 . . . . . Revision 26
604 thru 606 . . . . . Revision 20
801 thru 804 . . . . . Revision 20

63–15–10

401 thru 403 . . . . . Revision 20
404 . . . . . Revision 22
405 thru 409 . . . . . Revision 20
410 . . . . . Revision 28
601 thru 603 . . . . . Revision 20
604 . . . . . Revision 37
605/(606 blank) . . . . . Revision 20
801 and 802 . . . . . Revision 20

63–15–30

201 . . . . . Revision 20
202 . . . . . Revision 36
203 thru 207/(208 blank) . . . . . Revision 20

63–20–00

201 thru 203 . . . . . Revision 20
204 and 205 . . . . . Revision 36
206 and 207/(208 blank) . . . . . Revision 20

63–20–25

201 and 202 . . . . . Revision 20
203 . . . . . Revision 25
204 . . . . . Revision 28
205 . . . . . Revision 24
206 thru 209/(210 blank) . . . . . Revision 29

63–21–00

401 and 402 . . . . . Revision 20
403 . . . . . Revision 28
404 thru 408 . . . . . Revision 20
409 . . . . . Revision 36
410 . . . . . Revision 20
411 . . . . . Revision 36
412 . . . . . Revision 37
601 and 602 . . . . . Revision 36
603 . . . . . Revision 37
604 . . . . . Revision 36
801 and 802 . . . . . Revision 22
803 . . . . . Revision 37
804 and 805 . . . . . Revision 36

806 and 807 . . . . . Revision 37
808 and 809 . . . . . Revision 36
810 . . . . . Revision 22

63–22–00

201 thru 204 . . . . . Revision 20
401 thru 413/(414 blank) . . . . . Revision 20
601 and 602 . . . . . Revision 20
901 thru 917/(918 blank) . . . . . Revision 20

63–25–10

201 . . . . . Revision 36
202 . . . . . Revision 20
203 . . . . . Revision 40
204 thru 207/(208 blank) . . . . . Revision 20

63–25–30

201 . . . . . Revision 36
202 . . . . . Revision 20
203 . . . . . Revision 33
204 . . . . . Revision 20

63–30–00

201 and 202 . . . . . Revision 20
203 and 204 . . . . . Revision 36
205 . . . . . Revision 29
206 . . . . . Revision 36

Chapter 64

i thru iv . . . . . Revision 40

64–00–00

101 . . . . . Revision 21
102 . . . . . Revision 34

64–00–05

901 thru 908 . . . . . Revision 21

64–10–00

201 . . . . . Revision 34
202 thru 206 . . . . . Revision 21
207 . . . . . Revision 32
208 thru 210 . . . . . Revision 21
211 thru 214 . . . . . Revision 22

64–20–00

201 thru 203 . . . . . Revision 21
204 . . . . . Revision 28
205 thru 207/(208 blank) . . . . . Revision 21

64–25–30

401 . . . . . Revision 33
402 and 403 . . . . . Revision 21
404 . . . . . Revision 24
405 . . . . . Revision 21
406 thru 408 . . . . . Revision 34
601 . . . . . Revision 34
602 . . . . . Revision 39
801 thru 804 . . . . . Revision 21
805 and 806 . . . . . Revision 40

64–30–00

201 . . . . . Revision 21
202 . . . . . Revision 36
203 and 204 . . . . . Revision 21
205 . . . . . Revision 40
206 and 207 . . . . . Revision 34
208 thru 210 . . . . . Revision 21

Chapter 67

i thru xii . . . . . Revision 39

67–00–00

101 . . . . . Revision 30
102 and 103 . . . . . Revision 21
104 . . . . . Revision 29
105 . . . . . Revision 39
106 thru 111/(112 blank) . . . . . Revision 30

67–10–00

1 thru 5/(6 blank) . . . . . Revision 21
401 thru 405 . . . . . Revision 21
406 . . . . . Revision 37
407 thru 411 . . . . . Revision 21
412 . . . . . Revision 29
413 . . . . . Revision 24
414 . . . . . Revision 21
415 thru 417 . . . . . Revision 29
418 . . . . . Revision 39
419 . . . . . Revision 21
420 . . . . . Revision 29
421 . . . . . Revision 21
422 . . . . . Revision 29
423 . . . . . Revision 31
424 . . . . . Revision 29
501 thru 503 . . . . . Revision 21
504 and 505 . . . . . Revision 34
506 . . . . . Revision 21
507 . . . . . Revision 34
508 and 509 . . . . . Revision 21
510 . . . . . Revision 24
511 . . . . . Revision 38
512 thru 515 . . . . . Revision 21
516 . . . . . Revision 36
517 thru 521 . . . . . Revision 21
522 . . . . . Revision 36
523 . . . . . Revision 29

524 . . . . . Revision 31
525 and 526 . . . . . Revision 36
527 thru 530 . . . . . Revision 21
601 . . . . . Revision 28
602 . . . . . Revision 21
603 . . . . . Revision 28
604 . . . . . Revision 39
605 . . . . . Revision 21
606 and 607 . . . . . Revision 39
608 . . . . . Revision 28
609 and 610 . . . . . Revision 39
801 thru 813 . . . . . Revision 21
814 and 815 . . . . . Revision 31
816 . . . . . Revision 21

67–10–20

201 thru 202 . . . . . Revision 21
203 . . . . . Revision 40
204 thru 208 . . . . . Revision 21

67–20–10

1 and 2 . . . . . Revision 21
401 and 402 . . . . . Revision 21
403 . . . . . Revision 34
404 . . . . . Revision 26
405 thru 407/(408 blank) . . . . . Revision 21
501 thru 504 . . . . . Revision 21
601 and 602 . . . . . Revision 21
801 thru 806 . . . . . Revision 21

67–20–30

1 . . . . . Revision 34
2 . . . . . Revision 25
401 . . . . . Revision 18
402 . . . . . Revision 34
403 . . . . . Revision 18
404 . . . . . Revision 33
405 . . . . . Revision 38
406 . . . . . Revision 34
407 . . . . . Revision 38
408 . . . . . Revision 25
409 thru 412 . . . . . Revision 33
413 . . . . . Revision 25
414 thru 416 . . . . . Revision 30
501 . . . . . Revision 33
502 . . . . . Revision 18
503 . . . . . Revision 20
504 . . . . . Revision 18
505 . . . . . Revision 30
506 . . . . . Revision 18
507 . . . . . Revision 26
508 . . . . . Revision 30
509 . . . . . Revision 37
510 and 511 . . . . . Revision 30
512 . . . . . Revision 36
513 thru 516 . . . . . Revision 30
601 . . . . . Revision 34
602 . . . . . Revision 35
603 . . . . . Revision 39
604 and 605 . . . . . Revision 24
606 . . . . . Revision 39
801 thru 803 . . . . . Revision 18
804 and 805 . . . . . Revision 30
806 . . . . . Revision 34

Chapter 71

i thru x . . . . . Revision 36

71–00–00

1/(2 blank) . . . . . Revision 22
401 thru 405 . . . . . Revision 22
406 . . . . . Revision 30
407 thru 411 . . . . . Revision 22
412 and 413/(414 blank) . . . . . Revision 26

71–00–30

1/(2 blank) . . . . . Revision 22
401 thru 404 . . . . . Revision 22
405 and 406 . . . . . Revision 34
407 thru 411 . . . . . Revision 22
412 . . . . . Revision 26

71–00–47

1 thru 3/(4 blank) . . . . . Revision 22
401 thru 406 . . . . . Revision 22
407 . . . . . Revision 36
408 thru 411/(412 blank) . . . . . Revision 29

71–10–00

201 thru 206 . . . . . Revision 22

71–10–05

201/(202 blank) . . . . . Revision 22
901 thru 904 . . . . . Revision 22

71–10–10

1 . . . . . Revision 22
2 . . . . . Revision 36
3 and 4 . . . . . Revision 22
101 thru 106 . . . . . Revision 36
201 thru 207/(208 blank) . . . . . Revision 22
401 . . . . . Revision 22
402 . . . . . Revision 37

403/(404 blank) . . . . . Revision 22
601 . . . . . Revision 39
602 and 603 . . . . . Revision 22
604 . . . . . Revision 38
801 thru 814 . . . . . Revision 22
901 thru 923/(924 blank) . . . . . Revision 22

71–10–60

1/(2 blank) . . . . . Revision 22
101/(102 blank) . . . . . Revision 22
401 . . . . . Revision 22
402 thru 404 . . . . . Revision 29
601 . . . . . Revision 29
602 . . . . . Revision 33

71–20–00

1/(2 blank) . . . . . Revision 22
401 . . . . . Revision 26
402 . . . . . Revision 22
403 and 404 . . . . . Revision 34
405/(406 blank) . . . . . Revision 22
601/(602 blank) . . . . . Revision 22
801/(802 blank) . . . . . Revision 22

71–30–00

1 and 2 . . . . . Revision 22
101 thru 103/(104 blank) . . . . . Revision 22
401 thru 412 . . . . . Revision 22
413 and 414 . . . . . Revision 26
601 and 602 . . . . . Revision 32
801 thru 804 . . . . . Revision 22
901 thru 905/(906 blank) . . . . . Revision 22

71–60–00

201 thru 205/(206 blank) . . . . . Revision 22

Chapter 75

i/(ii blank) . . . . . Revision 22

75–10–00

201 thru 203 . . . . . Revision 22
204 . . . . . Revision 37
205 and 206 . . . . . Revision 22

Chapter 76

i thru iv . . . . . Revision 37

76–00–00

1 and 2 . . . . . Revision 22
101 and 102 . . . . . Revision 22

76–10–00

201 thru 214 . . . . . Revision 22
215 . . . . . Revision 35
216 . . . . . Revision 22
217 thru 219 . . . . . Revision 35
220 and 221 . . . . . Revision 22
222 and 223 . . . . . Revision 35
224 . . . . . Revision 22

76–20–00

201 thru 213/(214 blank) . . . . . Revision 22

76–47–00

201 . . . . . Revision 22
202 and 203 . . . . . Revision 37
204 . . . . . Revision 33
205 and 206 . . . . . Revision 37
207 . . . . . Revision 22
208 thru 211 . . . . . Revision 37
212 . . . . . Revision 36

Chapter 78

i and ii . . . . . Revision 35

78–20–00

201 thru 203 . . . . . Revision 38
204 thru 209/(210 blank) . . . . . Revision 22

78–30–00

201 . . . . . Revision 38
202 thru 204 . . . . . Revision 35

Chapter 79

i and ii . . . . . Revision 23

79–00–00

201 thru 212 . . . . . Revision 23

79–10–10

201 and 202 . . . . . Revision 26
901 thru 903/(904 blank) . . . . . Revision 23

Chapter 91

i/(ii blank) . . . . . Revision 29

91–00–00

1 . . . . . Revision 23
2 . . . . . Revision 34
3 . . . . . Revision 36
4 . . . . . Revision 34
5 . . . . . Revision 37
6 thru 8 . . . . . Revision 34
9 . . . . . Revision 37
10 . . . . . Revision 34
11 . . . . . Revision 29
12 . . . . . Revision 34
13 . . . . . Revision 29
14 . . . . . Revision 34
15 . . . . . Revision 37
16 thru 22 . . . . . Revision 40

This Page Intentionally Left Blank

INTRODUCTION
MAINTENANCE PRACTICES

1. Maintenance and Operational Check Requirements and Precautions

All helicopter maintenance is to comply with the following requirements and precautions.

A. Pilot's or Rotorcraft Flight Manual

Maintenance checks requiring helicopter operation must be performed in accordance with requirements and limitations specified in the applicable MDHI Flight Manual (PFM or RFM) and all applicable Optional Equipment Supplements.

B. Operational Checks

After maintenance, modification, disassembly, re-assembly, replacement, cleaning, repair or installation; the affected parts, assemblies, installations or systems shall be inspected and an operational check will be performed prior to releasing the helicopter for flight (Ref. Maintenance Information Requests).

2. Inspections

Inspections specified in this manual are visual inspections for cracks, corrosion, distortion, security and other obvious defects or damage.

Visual inspections of fuel and oil system hoses, tubes and fittings include checks for corrosion, leakage and distortion.

Specific inspection requirements, procedures and wear tolerances may be provided in the division text. Where inspection requirements are not listed, inspections should be made per Sections 05-10-00 thru 05-50-00.

Replace components that exhibit damage or wear beyond tolerances, or that negatively affect the proper function or integrity of an assembly.

3. Maintenance Information Requests

Address all questions regarding 369D/E/FF - 500/600N helicopter maintenance to the MDHI Field Service Representative assigned to the geographical area in which the helicopter is being operated. Should there be no factory representative in the area, contact Product Support Dept., Technical Publications, Mesa, Arizona. If the item in question is vendor supplied; i.e., engine, engine fuel control and governor, starter-generator, fuel cells, etc., contact the manufacturer directly to get definitive answers to your questions (Ref. Table 201. Related Publications and Directives, which lists component manufacturers, suppliers and their addresses).

4. Related Publications

Publications and directives that form part of the information file for helicopter component maintenance are listed in Table 201. Related Publications and Directives.

5. Optional Equipment

All optional equipment available for and usable on commercial model helicopters is listed in Table 202 Optional Equipment. Contact MDHI for compatibility of mixing options.

Table 201. Related Publications and Directives

Component and Manufacturer, or Source	Publication Title	Publication or Directive No.
General Information		
Superintendent of Documents U.S. Government Printing Office Division of Public Documents Washington, D.C. 20402	Acceptable Methods, Techniques and Practices – Aircraft Inspection and Repair (GPO Catalog No. TD 4–28/2:972)	FAA AC No. 43.13–1A (1)
	Advisory Circular – Corrosion Control for Aircraft	FAA AC No. 43–4 (1)
IHS Aviation & Aerospace 15 Inverness Way East Englewood CO 80112 United States	Nondestructive Testing Personnel Qualification and Certification	NAS–410
	Nondestructive Testing Personnel Qualification and Certification	ASNT–SNT–TC–1A
	Standard Terminology for Non–destructive Examinations	ASTM E 1316
Aerospace Industries Association of America, Inc. 1725 De Sales Street, N.W. Washington, 6, D.C.	National Aerospace Standard (Title as applicable)	NAS No. as applicable

REVISION:	DATE	FAA SIGNATURE AND DATE
Revision 29:	11 May 2001	5/4/01 5/14/01
Revision 30:	11 July 2001	Section 04–00–00 Not Affected This Revision
TR 01–001:	10 August 2001	8/8/01
Revision 31:	5 November 2001	Section 04–00–00 Not Affected This Revision T/R 01–001 Previously Signed
TR 02–002:	30 January 2002	1/23/02
Revision 32:	18 March 2002	3/15/02
Revision 33:	24 June 2002	6/11/02
TR 03–001:	18 June 2003	6/13/03
TR 03–002:	25 June 2003	7/2/03
Revision 34:	21 August 2003	Section 04–00–00 Not Affected This Revision T/R 03–001 and 03–002 Previously Signed
TR 03–003:	30 September 2003	12/3/03
TR 03–004:	17 December 2003	1/7/04
Revision 35:	20 May 2004	Section 04–00–00 Not Affected This Revision T/R 03–003 and 03–004 Previously Signed
TR 04–001:	28 May 2004	Ronald Atmore 6/7/04
Revision 36:	11 November 2004	11/3/04
Revision 37:	13 December 2005	Section 04–00–00 Not Affected This Revision
TR 05–002:	16 December 2005	12/29/05 12/29/05
Revision 38:	25 April 2006	Section 04–00–00 Not Affected This Revision T/R 05–002 Previously Signed

REVISION:	DATE	FAA SIGNATURE AND DATE
TR 06–001:	05 July 2006	7/17/06
Revision 39:	10 April 2007	Section 04–00–00 Not Affected This Revision
TR 07–001:	11 April 2007	Section 04–00–00 Not Affected This Revision

CONTINUED AIRWORTHINESS
COMPONENT OVERHAUL/RECOMMENDED REPLACEMENT

1. Component Overhaul or Recommended Replacement Schedule

Table 1 is the Overhaul Schedule. The listed components or assemblies should be removed from the helicopter and overhauled at intervals specified.

Table 2 is the Recommended Replacement Schedule. The listed components should be removed from the helicopter and scrapped at intervals specified.

Neither the assignment of an airworthiness life to a component nor failure to assign an airworthiness life constitutes a warranty of any kind. The only warranty applicable to the helicopter and any components is that warranty included in the Purchase Agreement for the helicopter or the component.

NOTE: Hours for the 369F Model helicopters will be the same as the 369FF unless otherwise noted.

Table 1. Component Overhaul Schedule

Component (1)	Model	Part Number (2)	Hours	
Main rotor transmission assembly	369D/E/FF – 500N	369D25100	3000	
		369D25100	4000	(12)
	369D/E/FF – 500N	369F5100	5000	
	600N	369F5100	3000	
Main rotor swashplate assembly	369D/E/FF – 500N	369D27609	2770	(3)(9)
	600N	600N7630–3	2700	(4)(9)
Main rotor hub assembly	369D/E/FF – 500N	369D21200	2770	(7)(9)
	600N	600N1200	2700	(7)(9)
Landing gear damper	369D/E/FF – 500N	369D26300	On Cond.	(6)
		369D26301	On Cond.	(6)
	600N	600N6300	On Cond.	(6)
Overrunning clutch assembly	369D/E/FF – 500N	369A5350–603	1800	(5)
		369A5350–605	1800	(5)
	369D/E/FF – 500/600N	369F5450	1800	(10)(11)
Tail rotor transmission	369D/E	369D25400	4800	
	369FF		3365	
	369D/E	369D25300	4800	
Starter/Generator (8)	369D/E – 500N	369A4550	1200	
	369FF – 600N	369D28550	1200	

NOTES:

(1) Components interchanged between models or configurations must be restricted to the lowest service life indicated for the models or configurations affected. Components removed at retirement are to be destroyed or conspicuously marked to prevent inadvertent return to service. Parts are applicable only on models under which a service life is listed.

(2) Service life shown for basic part number applied to all dash–numbered versions unless otherwise indicated.

(3) Bearing assembly must be relubricated every 2 years or 2770 hours, whichever occurs first (Ref. CSP–COM–5, Sec. 62–30–10).

(4) Bearing assembly must be relubricated every 2 years or 2700 hours, whichever occurs first (Ref. CSP–COM–5, Sec. 62–30–60).

(5) Under some operating conditions, overrunning clutch splines may need to be regreased more often than at the 100−hour intervals and bearings may need to be regreased more often than at the 300−hour intervals.

With no cargo hook attached, inspect and regrease splines every 100 hours and bearing every 300 hours (Ref. Sec. 63−10−00, Installation of Overrunning Clutch Subassembly and CSP−COM−5, Ball Bearing Inspection and Grease Repack).

With cargo hook attached, inspect sprag assembly, inner race and outer race every 300 hours or 300 hours of actual hook time when logged separately as per FAR 91.417, regrease clutch splines every 100 hours and bearing every 300 hours (Ref. Sec. 63−10−00, Installation of Overrunning Clutch Subassembly and CSP−COM−5, Ball Bearing Inspection and Grease Repack).

(6) When inspected per Landing Gear Damper Inspection (Ref. Sec. 32−10−00 for 369D/E/FF − 500N, or Sec. 32−10−60 for 600N).

(7) Use only main rotor hubs overhauled by MDHI or approved MDHI Licensees.

(8) Refer to data plate to determine start/generator manufacturer.

(9) The shelf life of bearings preserved with grease is limited to 4 years.

(10) Regrease overrunning clutch bearings every 300 hours (Ref. CSP−COM−5, Sec. 63−10−15).

(11) Interim hours: life extension testing in progress.

(12) The 369D25100 main rotor transmission overhaul time may be extended from a mandatory 3000 hour overhaul time to a mandatory 4000 hour overhaul time, provided, the transmission is operated with Mobil SHC626 since last overhaul.
The transmission shall not exceed 3000 hours if cargo hook time has reached a quantity of 750 hours.

Table 1. 100–Hour or Annual Inspection (Cont.)

Registration No._____ **Serial No.**_____ **Helicopter Hours**_____ **Torque Events**_____			
Model	**Requirement**	**Chap/Sect**	**Initial**
500/600N	* Thruster cones and tip cap (500N only) for damage and security. Inspect for wear between thruster cones and tailboom at points of contact. * Using a flashlight and 10X magnifying glass, inspect horizontal stabilizer mounting brackets for cracks (pay particular attention to the forward inboard legs) (Ref. Tailboom Inspection). * Using a bright flashlight, inspect fore and aft radii of the lower portion of the three upper slot bridges for cracks, illuminate area under the flap. The flap may be raised slightly, using finger pressure only, to aid in checking this area (Ref. Tailboom Inspection). * Using a bright light and 10X magnifying glass, inspect the four tailboom attachment lugs for cracks and fiber damage. Pay particular attention to area on top of the lug from the radius block to 2 inches aft (Ref. Tailboom Inspection). * Tailboom closeout fairings for security of attachment hardware. Inspect for damage and chafing between closeout fairing and tailboom.	53–40–30 53–50–30	
369D/E/FF	Horizontal stabilizer for: * Skin damage and loose rivets. * Tip plates for damage. Check for secure attachments (Ref. Horizontal Stabilizer and Tip Plates Inspection).	53–50–10	
500/600N	Horizontal stabilizer for: * Skin damage and loose rivets. * Mounting fittings for cracks and security. * Stabilizer attach bolts for security.	53	
369D/E/FF	Vertical stabilizer for: * Damage to leading and trailing edges and damaged stressed side panels (no repair of side panels permitted). * Mounting fittings for cracks and security. * Tail skid for obvious damage and security (Ref. Vertical Stabilizer Inspection).	53–50–10	
500/600N	Vertical stabilizers for: * Damage to leading or trailing edges and damaged side panels. * Cracks in skin, no cracks permitted (pay particular attention to areas around mounting bolts). * Stabilizer attach bolts for security. * Stabilizer mount bushings for wear, security and correct installation. * Excess play in control linkage, bearings and security of attaching hardware.	53	

Table 1. 100-Hour or Annual Inspection (Cont.)

Registration No._____ **Serial No.**_____
Helicopter Hours_____ **Torque Events**_____

Model	Requirement	Chap/Sect	Initial
	LANDING GEAR		
ALL	Landing gear skid tubes and fairings for: * Wear and damage in excess of permissible limits. * Upper fairing fillets for freedom of movement and general condition. * Strut attachment points for security and pivot (swivel) bearings for excessive play. * Landing gear dampers for correct extension, security of attachment and for signs of fluid leakage. Pivot bearings for excessive play. * Passenger steps for security and damage.	32	
369D/E/FF 500N	Remove landing gear fairing fillets and visually inspect landing gear strut assemblies for cracks and damage.		
369D/E/FF 500N	For aircraft 369D; 001 & subs, 369E; 0001 thru 0528, 369FF; 0001 thru 0114 and 500N; 001 thru 077: Remove plug button from inboard of fairing assembly. Using a bright light and 10X magnifying glass, inspect rivet hole in underside of strut for cracks. If crack is found, strut must be scrapped.		
	CABIN		
ALL	Compartment heat and anti-icing valve controls for: * Easy and correct operation and rigging. * Heating system heat diffusers for security.	21	
ALL	* Seat belts for condition and security. * Inertia reels for condition and proper extension/retraction.	25	
ALL	Pilot/copilot controls for: * Wear, looseness and general condition of control rods and rod end bearings. * Quick-release pins for condition. * Cyclic, collective and anti-torque controls for free movement. * Cyclic trim actuators for security. * Collective torque tube, support bracket and bungee support bracket for evidence of cracks, gouges or other visible damage in attach lug and bungee support bracket attach areas; gaps between bracket and cradle cap of collective torque tube (use bright light and mirror). * N_1 power controls for obvious damage. * Check for minimum cyclic friction adjustment (resistance to turning spring with fingers). * Flight control system one-way lock (Uniloc) for oil leakage, condition and security. Fluid reservoir 1/2 – 3/4 full; replenish if low.	67 76	

NONDESTRUCTIVE INSPECTION MAINTENANCE PRACTICES

1. Nondestructive Inspection Methods

A. Visual Inspection

(Ref. Figure 201)

(1). Select applicable visual inspection aids from the following list:

(a). A flashlight with the correct explosive atmosphere rating, beam spread, efficiency, and brightness for the inspection being performed.

(b). An inspection mirror on a ball joint for use in viewing an area that is not in the normal line of sight.

(c). A 2-10 power magnifying glass to expose defects that cannot be seen by the unaided eye.

(d). A borescope to allow remote visual inspection of internal surfaces or otherwise inaccessible areas.

(2). Perform a preliminary inspection of overall general area for cleanliness, presence of foreign objects, deformed or missing fasteners, security of parts, corrosion, and damage.

(3). Treat any corrosion found during preliminary inspection.

(4). Clean the areas or surface of parts to be inspected.

(a). Remove any contaminates that might hinder surface indications.

(b). Do not remove protective finishes.

(5). Using optical aids as required, inspect area as follows:

(a). Examine surface for cracks using a flashlight, and confirm with a magnifying glass.

(b). Examine surface for other discontinuities, such as: discoloration from overheating; buckled, bulging, dented skin; cracked, chafed, split, or dented tubing; chafed electrical wiring; delaminating of composites; and damaged protective finishes.

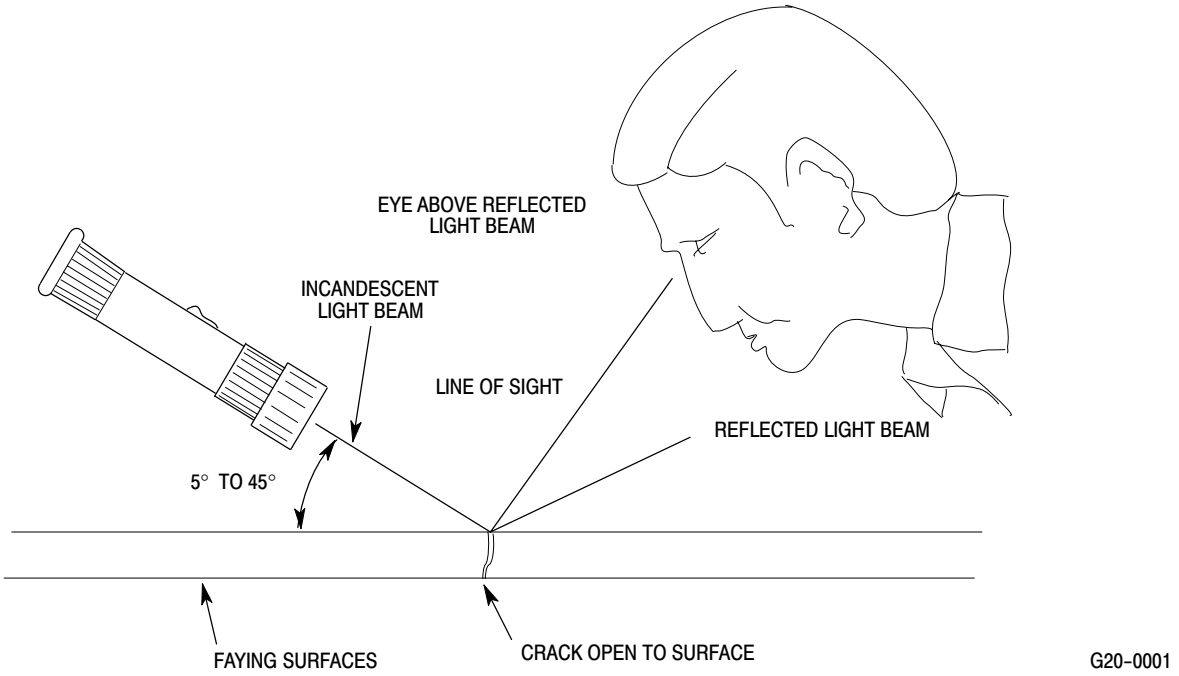

Figure 201. Visual Inspection Technique

B. Dye Penetrant Inspection

Consumable Materials (Ref. Section 91-00-00)	
Item	Nomenclature
CM234	Solvent, dry-cleaning
CM805	Dye penetrant kit

(1). Using cleaning solvent (CM234), clean area to be inspected.

NOTE:

- Manufacturers instructions on Dye Penetrant Kit take precedence over the following steps.
- Parts to be inspected must be dry and heated to at least 70°F (21.1°C) but not over 130°F (54.4°C).

(2). Apply penetrant from dye penetrant kit (CM805) by brushing, spraying or by dipping. Allow to stand for a minimum of 2 minutes.

(3). Remove excess penetrant with remover (available with dye penetrant kit (CM805)), or by cleaning with plain water. Allow part to dry.

(4). Apply a light even layer of developer from dye penetrant kit (CM805) by brushing, spraying or by dipping. When dipping, avoid excess quantity.

(5). Penetrant, which has penetrated into cracks (or other openings) in the surface of the part will be drawn out by the developer resulting in a bright red indication.

(6). If part is serviceable or repairable, clean part free of penetrant and developer with cleaning solvent (CM234).

C. Coin Tap Inspection

(Ref. Figure 202)

Consumable Materials (Ref. Section 91-00-00)	
Item	Nomenclature
CM234	Solvent, dry-cleaning

The coin tap method of inspection is used evaluate composite structures. The coin tap is limited to detecting shallow defects.

When inspecting cored structure, two sided access is required. When multiple laminates are installed over core, the core bond-line cannot be evaluated.

The sound of an acceptable part can vary considerably and the entire area must be tapped in order to detect any variance. Compare the sound of the suspected area with the sound of a known acceptable area.

An acceptable area will have a slightly sharper or crisper sounding response. A dead or flat sound is unacceptable, and requires a more thorough type of NDI.

CAUTION Any suspect areas must be inspected by person(s) qualified in the appropriate NDI. Contact MDHI cognizant engineering for recommended NDI procedures and applications.

(1). Thoroughly clean area to be inspected with cleaning solvent (CM234).

(2). Perform a visual inspection for any raised or blistered appearing areas.

NOTE: Tap the entire area to be inspected including any surrounding area of like construction.

(3). Using a coin, light hammer, or other suitable blunt object, lightly tap the surface of the part to be inspected.

D. Fluorescent Penetrant Inspection

Refer to the appropriate manufacturer's related instructions for type of equipment and materials being used.

E. Magnetic Particle Inspection

Refer to the appropriate manufacturer's related instructions for type of equipment and materials being used.

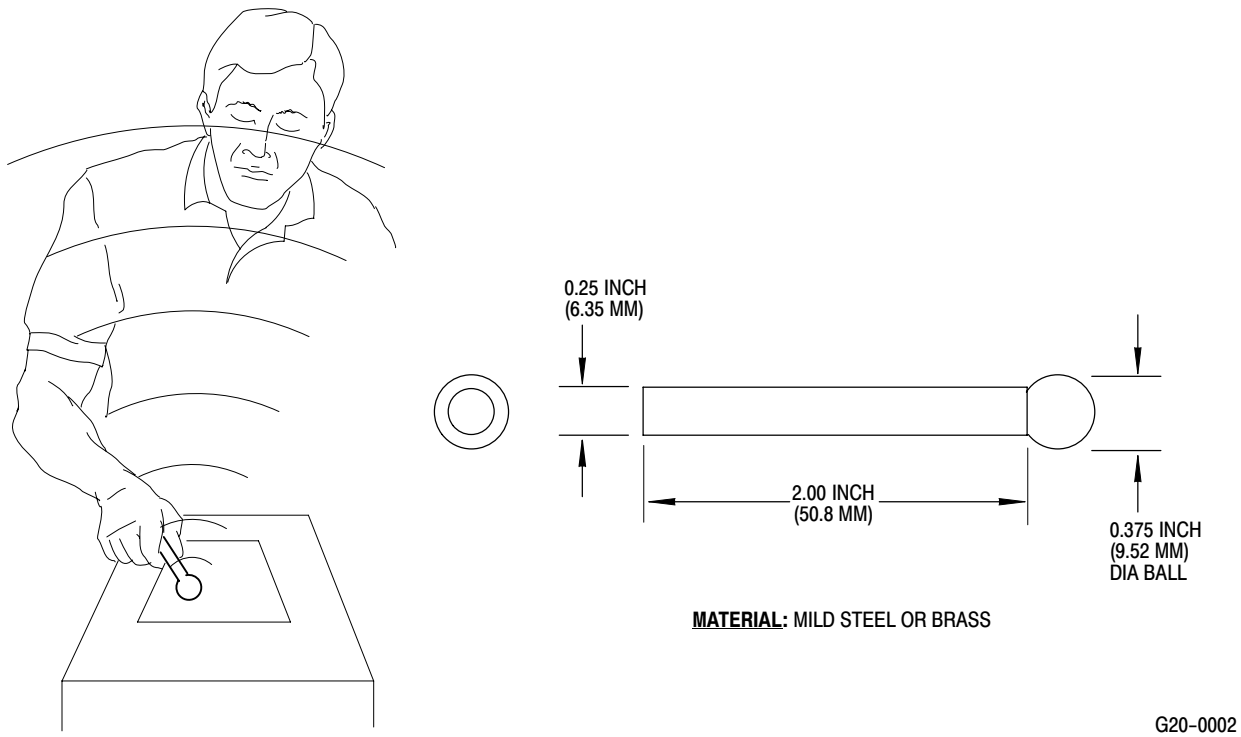

Figure 202. Coin Tap Inspection

F. Eddy Current Inspection – General

This procedure includes general information on material, equipment and procedures for the detection of surface cracks.

The Eddy Current test instruments induce an Eddy Current into a conductive medium and detect the change in the induced eddy current field which is produced by a defect.

Related Publications
(Ref. Section 01–00–00 (Table 201)

Specification	Publication Title
NAS–410	Nondestructive Testing Personnel Qualification and Certification
ASNT–SNT–TC–1	Nondestructive Testing Personnel Qualification and Certification
ASTM E 1316	Standard Terminology for Non–destructive Examinations

(1). Personnel Qualification and Certification.

(a). Personnel doing nondestructive tests must be qualified and certified in of NAS 410 or ASNT SNT–TC–1A or equivalent. Personnel making must be certified to Level 2 minimum.

(b). The test facilities written procedure approved by the Level 3 technician must be followed.

(2). Equipment

Refer to equipment manufacturer's instructions for type of material inspected.

(a). Electronic – Electronic – All electronic equipment must be calibrated annually or after repair. Records must be kept and made available when requested. All calibration must be made to a national standard. The equipment must be approved for the type of part examined. Maintain a 3:1 signal to noise ratio during inspection.

(b). Probes – Must be correct for the part shape, depth of penetration, and frequency range for material examined, and sensitivity to sense the defect. Test probes must not give interference during movement. Probes must be identified with the manufacturer's part number and frequency range.

(c). Standards – Reference calibration standards can be actual parts (with natural defects) or from test blocks. All calibration standards must be calibrated and certified.

1). Reference standards must be of an alloy of the same base material and temper or approximately the same electrical conductivity, surface texture, shape, and defect location as the part to be inspected.

2). Only the reference standards calibrated and certified must be used for the specific component examined. All calibration standards must be kept to a national standard. Records must be kept and made available when requested.

(3). Surface preparation – All surface contamination that could cause an interference with the inspection must be removed. Methods of cleaning must not damage surface finish or damage to the part.

(4). Standardization

(a). Standardization must be done in accordance with the manufacture recommendations.

(b). Calibration scan must be done before, during and after the inspection. If the after calibration shows test equipment is not accurate, do a calibration of the equipment and do another inspection on all components examined since last acceptable calibration.

(5). Regulatory Requirements

The Eddy Current Inspection of components must be done with the test facilities local aviation regulatory authority and approved procedures.

(6). Test Facilities

(a). Approved facilities must use the same or equivalent equipment.

(b). Analysis of all indications must be made in accordance with the test facilities approved procedures and with defects.

(c). Parts with defects must be removed from service in accordance with the facilities approved procedures.

(d). Records must be completed in accordance with the facilities approved procedures.

TABLE OF CONTENTS

Para/Figure/Table	Title	Page
53-00-00	**Fuselage**	**A**
	Maintenance Practices	**201**
1.	Fuselage – General	201
2.	Stressed Sheet Metal Panels	201
3.	Stressed Sheet Metal Panel Inspection	201
4.	Non-Stressed Sheet Metal Panels	201
5.	Negligible Damage Inspection	201
	Table 201. Negligible Damage Inspection – Fuselage	202
	Figure 201. Fuselage – Major Sections	203
	Figure 202. Fuselage – Model 600N	204
53-10-00	**Windshields and Aft Section Windows**	**A**
	Maintenance Practices	**201**
1.	Windshields	201
2.	Aft Section Windows	201
3.	Aft Section Windows Replacement	201
	A. Aft Section Windows Removal	201
	B. Aft Section Windows Installation	201
4.	Windshield Frame Replacement	201
	A. New-Style Windshield Installation	201
5.	Windshield Inspection	201
6.	Windshield Repair	201
7.	Water Leak Prevention	202
8.	Geon Strips Repair	202
	Table 201. Negligible Damage of Canopy/Windshield	202
	Figure 201. (Round Nose) Windshields and Aft Section Windows	203
	Figure 202. (Extended Nose) Windshield and Aft Section Windows	204
	Figure 203. Windshield Installation (New Style)	205
	Figure 204. (Extended Nose) Windshields and Aft Section Windows (New Style)	206
53-20-00	**Lower Center Fuselage**	**A**
	Maintenance Practices	**201**
1.	Lower Center Fuselage – General	201
2.	Lower Center Fuselage Inspection	201
3.	Fuel Tank Support Skin Inspection (Fuel Cells Removed)	201
4.	Fuel Tank Support Skins Repair (Fuel Cells Removed)	201
	Figure 201. Lower Center Fuselage (369D/E/FF – 500N)	202

TABLE OF CONTENTS (Cont.)

Para/Figure/Table	Title	Page
	Figure 202. Lower Center Fuselage (Model 600N)	203
53-30-00	**Upper Aft Section Fuselage (369D/E/FF)**	**A**
Maintenance Practices		**201**
1.	Upper Firewall Replacement	201
2.	Firewall and Plenum Chamber Panels Replacement	201
	Figure 201. Soundproofing Insulation – Firewall and Plenum Chamber (Sheet 1 of 2)	202
	A. Mast Support Structure	204
3.	Mast Support Structure Inspection	204
	A. Firewalls	204
4.	Firewalls Inspection	204
	Figure 202. Firewall and Aft Section	205
	A. Firewall, Station 124.00 Insulation and Soundproofing	205
5.	Firewall and Plenum Chamber Soundproofing Panel Inspection	205
	A. Engine Air Inlet Fairing	205
6.	Engine Air Inlet (Plenum Chamber) Inspection	206
	A. Upper Aft Section General Repair	206
	B. Aft Fuselage Fittings	206
	C. Aft Fuselage Fittings General Repair	206
7.	Aft Section Strut Repair	206
8.	Silver Brazing Procedure – Upper Firewall Shell Patch	206
	Figure 203. Major Bulkheads and Structural Members – Aft Fuselage	207
9.	Plenum Chamber Hole Sealing	208
10.	Forward Fuselage Section Structure Rework	208
11.	Transmission Compartment Air Baffle, Seal and Cover Initial Installation	209
	Table 201. Weight and Balance Data	210
	Figure 204. Forward Fuselage Section Structure Rework	211
	Figure 205. Installation of Air Baffle, Seal and Cover Assemblies (Sheet 1 of 2)	212
53-30-30	**Upper Aft Section Fuselage (500/600N)**	**A**
Maintenance Practices		**201**
1.	Engine/Anti-Torque Air Inlet Fan Fairings	201
2.	Engine Air and Fan Inlet (Plenum Chamber Area) Inspection	201
	Figure 201. Upper Aft Section (500N)	202
	Figure 202. Upper Aft Section Fuselage (600N)	203
	A. Upper Aft Section General Repair	204
3.	Upper Fuselage Controls Fairing (600N)	204

TABLE OF CONTENTS (Cont.)

Para/Figure/Table	Title	Page
4.	Upper Fuselage Controls Fairing Replacement (600N)	204
A.	Upper Fuselage Controls Fairing Removal	204
B.	Upper Fuselage Controls Fairing Installation	204
5.	Engine Inlet Fairings Replacement	204
A.	Engine Inlet Fairing Removal	204
B.	Engine Inlet Fairing Installation	204
6.	Anti-Torque Fan Air Inlet Screen Replacement	204
A.	Fan Air Inlet Screen Removal	204
B.	Fan Air Inlet Screen Installation	204
7.	Fan Hub and Transmission Cover Fairing Replacement	204
A.	Fan Hub and Transmission Cover Removal	204
B.	Fan Hub and Transmission Cover Installation	205
8.	Engine Plenum Access Cover Replacement	205
A.	Engine Plenum Access Cover Removal	205
B.	Engine Plenum Access Cover Installation	205
9.	Tailboom Attach Fitting Inspection	205
	Figure 203. Tailboom Attach Fitting Inspection	206
10.	Lower Longeron Inspection (L158, R158)	207
11.	Forward Upper Longeron Inspection (L137, R137)	207
	Figure 204. Inspection Hole Locations	208
12.	Control Tunnel (FS 78.50) Beam Inspection	209
	Figure 205. Control Tunnel (FS 78.50) Beam Inspection	209
53-40-00	**Tailboom (369D/E/FF)**	**A**
Maintenance Practices		**201**
1.	Tailboom - General	201
2.	Tailboom Replacement	201
A.	Tailboom Removal	201
B.	Tailboom Installation	201
	Figure 201. Tailboom Assembly and Tailboom Extension	202
3.	Tailboom Extension Replacement (369FF)	202
4.	Tailboom Inspection	203
5.	Tailboom Repair	203
	Figure 202. Tailboom Installation and Removal	204
53-40-30	**Tailboom (500/600N)**	**A**
Maintenance Practices		**201**
1.	Tailboom Description	201

TABLE OF CONTENTS (Cont.)

Para/Figure/Table	Title	Page
2.	Tailboom Replacement	201
A.	Tailboom Removal	201
Figure 201.	Tailboom Assembly (Sheet 1 of 3)	202
B.	Tailboom Installation	205
3.	Tailboom Inspection	205
Figure 202.	Tailboom Flap Inspection	206
4.	Tailboom Repair	207
5.	Stator Replacement	207
A.	Stator Removal	207
B.	Stator Installation	207
6.	Stator Blade Replacement	207
7.	Rotating Thruster Cone Replacement	207
A.	Rotating Thruster Cone Removal	207
B.	Rotating Thruster Cone Installation	207
8.	Rotating Thruster Cone Inspection	207
9.	Stationary Thruster Cone Replacement	208
A.	Stationary Thruster Cone Removal	208
B.	Stationary Thruster Cone Installation	208
10.	Stationary Thruster Cone Inspection	208
11.	Conduit and Support Strap Rebonding	208
Figure 203.	Conduit and Support Strap Rebonding	209
12.	Horizontal Stabilizer Mount Fitting Replacement	210
13.	500N3500-5 Cover Installation	211
Figure 204.	500N3500-5 Cover Installation	212
14.	Tail Skid Replacement	212
A.	Tail Skid Removal	212
B.	Tail Skid Installation	212
Figure 205.	Tail Skid Installation	213
53-50-10	**Stabilizer (T-Tail) (369D/E/FF)**	**A**
Maintenance Practices		**201**
1.	Stabilizer - General	201
A.	Stabilizer Troubleshooting	201
2.	Horizontal Stabilizer and Tip Plate Replacement	201
A.	Horizontal Stabilizer and Tip Plate Removal	201
B.	Horizontal Stabilizer and Tip Plate Installation	201
3.	Vertical Stabilizer Replacement	202

TABLE OF CONTENTS (Cont.)

Para/Figure/Table	Title	Page
	A. Vertical Stabilizer Removal	202
	B. Vertical Stabilizer Installation	202
4.	Horizontal Stabilizer and Tip Plate Inspection	202
5.	Vertical Stabilizer Inspection	202
	Figure 201. Stabilizer T-Tail Removal and Installation	203
6.	Horizontal Stabilizer and Tip Plate Repair	204
7.	Vertical Stabilizer Repair	204
8.	Angle of Incidence Measurement	204
	Table 201. Horizontal Stabilizer Angle of Incidence	204
9.	Angle of Incidence Adjustment	205
10.	Horizontal Stabilizer Tab Weight Installation	205
	Table 202. Troubleshooting Tailboom and Tail Surfaces	205
	Figure 202. Horizontal Stabilizer Incidence Angle Measuring Tool	206
	Figure 203. Establishing Horizontal Stabilizer Angle of Incidence	206
	Figure 204. Sealing - Vertical Stabilizer (0003D - 0286D)	207
53-50-30	**Stabilizer (500/600N)**	**A**
Maintenance Practices		**201**
1.	Stabilizers Description	201
	A. Horizontal Stabilizer Description	201
	B. Vertical Stabilizers Description	201
2.	Vertical Stabilizer Replacement	201
	A. Vertical Upper and Lower Stabilizer Removal	201
	B. Vertical Upper and Lower Stabilizer Installation	201
3.	Horizontal Stabilizer Replacement	202
	A. Horizontal Stabilizer Removal	202
	B. Horizontal Stabilizer Installation	202
	Figure 201. Stabilizer Installation with YSAS (Sheet 1 of 2)	203
4.	Horizontal Stabilizer Eye Bolt Replacement	205
	A. Horizontal Stabilizer Eye Bolt Removal	205
	B. Horizontal Stabilizer Eye Bolt Installation	205
5.	Horizontal/Vertical Stabilizer Control Tube and Bellcrank Replacement	205
	A. Horizontal/Vertical Stabilizer Control Tube and Bellcrank Removal	205
	B. Horizontal/Vertical Stabilizer Control Tube and Bellcrank Installation	205
6.	Vertical Stabilizer Inspection	205
7.	Vertical Stabilizer Repair	205
8.	Horizontal Stabilizer Inspection	205
9.	Vertical Stabilizer Torque Tube Replacement	206

TABLE OF CONTENTS (Cont.)

Para/Figure/Table	Title	Page
	A. Vertical Stabilizer Torque Tube Removal	206
	B. Vertical Stabilizer Torque Tube Installation	206
	Figure 202. Stabilizer Installation without YSAS	207
	Figure 203. Vertical Stabilizer Installation with Expandable Bolts	208
10.	Horizontal Stabilizer Repair	209
11.	Vertical Stabilizer Torque Tube and/or Bushing Replacement (Non-Bonded Bushings)	209
12.	Vertical Stabilizer Torque Tube and/or Bushing Replacement (Bonded Bushings)	209
13.	Vertical Stabilizer Torque Tube Bushing Rework (Non-Bonded Bushings to Bonded Bushings)	210
14.	Vertical Stabilizer Torque Tube Bearing Race Replacement	211
15.	Stabilizer Troubleshooting	212
	Table 201. Troubleshooting Tailboom and Tail Surfaces	212

(8). Install hub fairing onto main rotor hub assembly.

9. Angle of Incidence Adjustment

(1). Remove bolts and washers attaching horizontal stabilizer to vertical stabilizer fitting.

CAUTION Do not add more than two washers under each boss.

(2). Lift horizontal stabilizer and add equal number of AN960PD416L washers under each of two front, or each of two rear bosses.

(3). Install horizontal stabilizer with washers and bolts.

(4). Torque bolts to **90 - 110 inch-pounds (10.17 - 12.43 Nm)**.

(5). Repeat angle of incidence measurement (Ref. Angle of Incidence Measurement).

10. Horizontal Stabilizer Tab Weight Installation

Consumable Materials (Ref. Section 91-00-00)

Item	Nomenclature
CM318	Primer
CM425	Sealing compound

(Ref. Figure 201) Installation of tab weight is optional on the 421-087 -505 horizontal stabilizer if difficulty in tail rotor balance and horizontal stabilizer tab resonance vibration is encountered (Ref. Sec. 18-20-00, Horizontal Stabilizer Tuning).

(1). Temporarily apply one ounce tab weight to upper right trailing edge of the right tab using tape.

(2). Locate weight spanwise to the point of observed maximum amplitude vibration.

NOTE: Tab weight can be made from commercial automobile alloy wheel balance weight (0.100 x 0.75 x 2.00 inch).

(3). Run engine at 102% - 105% N_2 and observe horizontal stabilizer tab, weight may be moved inboard or outboard on tab depending on response.

(4). If needed, a one ounce weight may also be installed on left tab.

(5). A maximum of two ounces may be installed on each tab.

(6). Once correct position and amount of weight has been established, install weight(s) as follows:

(a). Cleco weight in place on stabilizer.

(b). Drill two #31 holes through each weight and stabilizer.

(c). Remove weight and deburr holes; touch up stabilizer holes with primer (CM318).

(d). Install weight, rivets and washers with wet primer.

(e). Seal mating edges of weight with sealing compound (CM425).

(7). Touch up with paint to match.

Table 202. Troubleshooting Tailboom and Tail Surfaces

Symptom	Probable Trouble	Corrective Action
High frequency vibration.	Loose vertical stabilizer.	Retorque bolts to **190 – 220 inch–pounds (21.47 – 24.86 Nm).**
NOTE: High frequency vibrations in helicopter can be caused by components in other systems (Ref. Chap. 63, 64 and 71).	Loose horizontal stabilizer.	Retorque nuts to **90 – 110 inch–pounds (10.17 - 12.43 Nm).** Check angle of incidence, (Ref. Angle of Incidence Measurement).

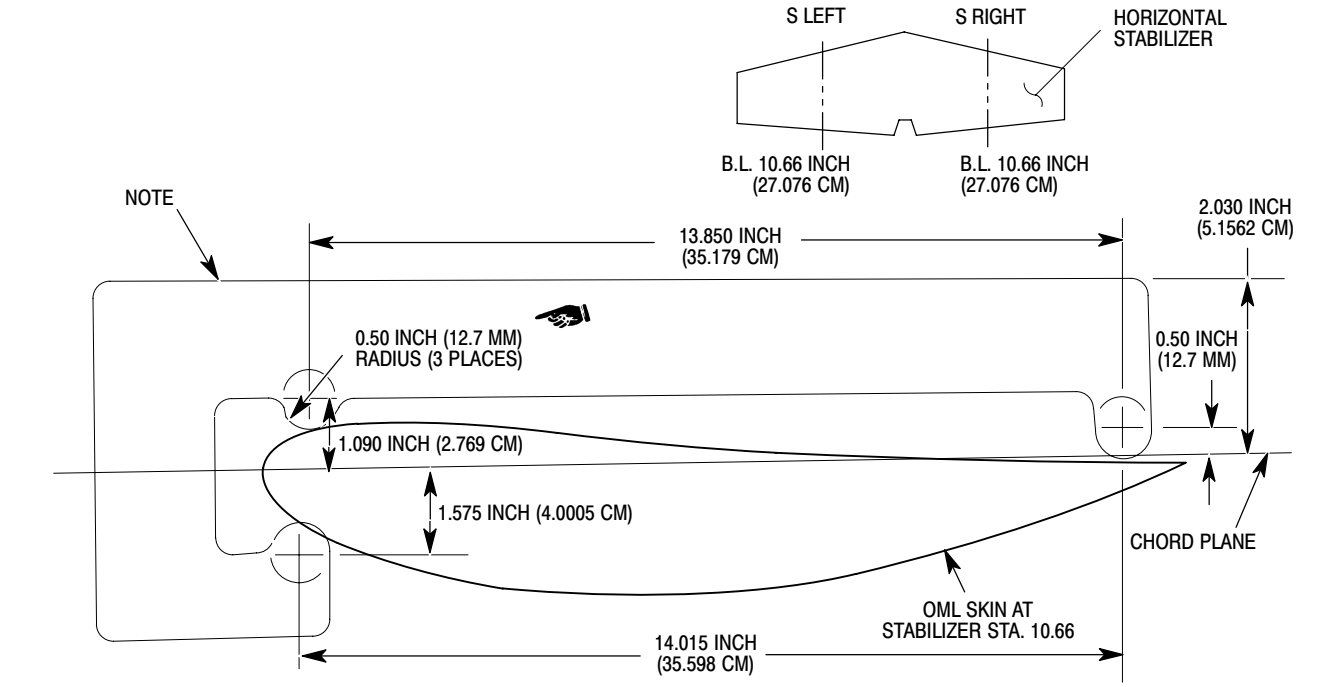

Figure 202. Horizontal Stabilizer Incidence Angle Measuring Tool

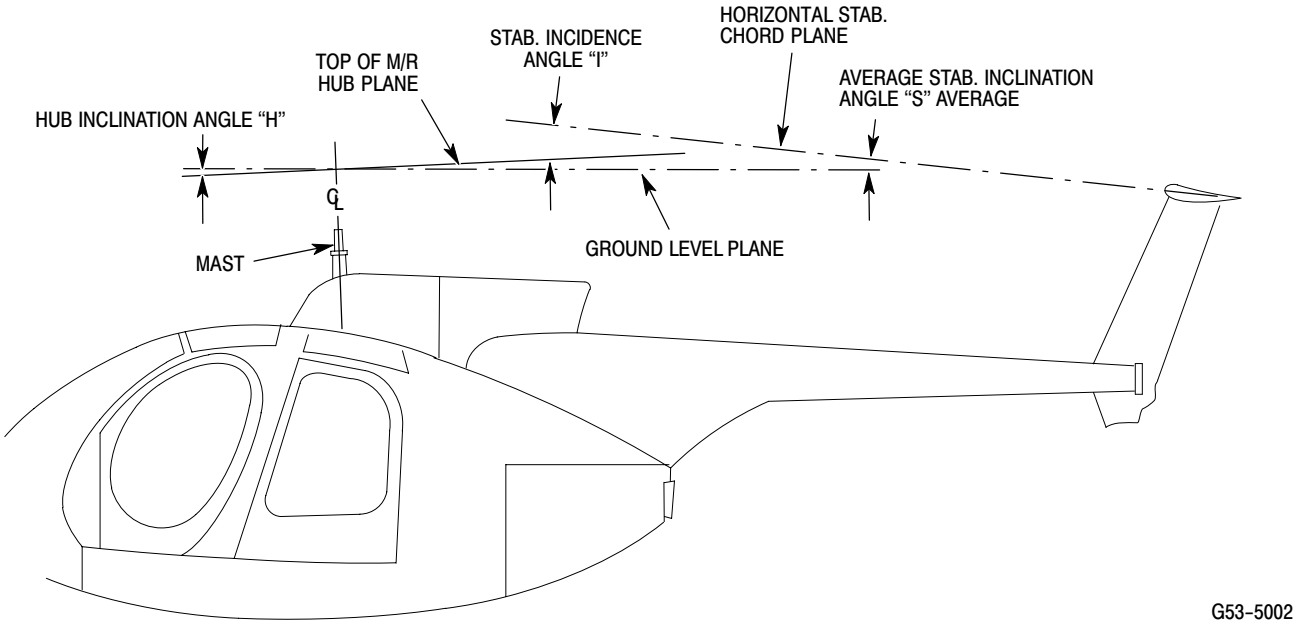

Figure 203. Establishing Horizontal Stabilizer Angle of Incidence

4. Horizontal Stabilizer Eye Bolt Replacement

A. Horizontal Stabilizer Eye Bolt Removal

(1). Remove horizontal stabilizer.

(2). Remove eye bolts by holding the flat surface of eye bolt with a wrench and removing nut.

B. Horizontal Stabilizer Eye Bolt Installation

(1). Install eye bolts in horizontal stabilizer, the short eye bolts in the forward holes and the longer eye bolts with spacer to the aft holes of horizontal stabilizer.

(2). Torque eye bolts to **80 - 120 inch-pounds (9.04 - 13.56 Nm) plus drag torque**.

(3). Install horizontal stabilizer.

5. Horizontal/Vertical Stabilizer Control Tube and Bellcrank Replacement

(Ref. Figure 201 and Figure 202)

A. Horizontal/Vertical Stabilizer Control Tube and Bellcrank Removal

(1). Remove horizontal stabilizer end tip covers and center access cover for access to bellcranks and control tubes.

(2). Remove cotter pin, nut, washer and bolt from center bellcrank shaft. Index mark bellcrank with grease pencil in relationship to shaft. Disconnect bellcrank.

(3). Disconnect control tube from vertical stabilizer torque tube bellcrank. Remove controls from horizontal stabilizer as required for maintenance.

B. Horizontal/Vertical Stabilizer Control Tube and Bellcrank Installation

Refer to adjustment and test control rigging during installation.

(1). Connect bellcrank to center bellcrank shaft and install bolt, washers and nut. Torque bolt to standard aircraft torque values and install cotter pin.

(2). Install control tubes and bellcranks as required, safety wire or cotter pin.

(3). Install center access plate with seven screws and washers.

6. Vertical Stabilizer Inspection

(Ref. Figure 201 and Figure 202)

(1). Inspect skin for cracks, bonding separation, delamanation and obvious damage.

(2). Inspect stabilizer for freedom of movement through pedal travel range, check for clearance between vertical to horizontal.

(3). Check mounting fitting holes for elongation.

NOTE: Internal stabilizer fitting may display cracking after installation of expandable bolts. This cracking, internal fitting only, is acceptable for continued service. Cracking of the external skin from the mounting bolt holes is unacceptable and stabilizer must be removed from service and scrapped.

7. Vertical Stabilizer Repair

Refer to MDHI Field Service Representative.

8. Horizontal Stabilizer Inspection

(1). Inspect skin for cracks, bonding separation, delamination and obvious damage.

(2). Inspect mounting fitting and attachment hardware for condition.

(3). Inspect center access panel and nut plate fasteners for condition, end tip plate access covers and position lights for condition.

(4). Inspect vertical stabilizer torques tubes for excessive axial and radial movement, 0.010 inch (0.254 mm) axial end play maximum allowable.

(5). Inspect torque tube bushings for wear and security.

(6). If the bushings are not bonded to the horizontal stabilizer, rework Vertical Stabilizer Torque Tube Bushings.

9. Vertical Stabilizer Torque Tube Replacement

A. Vertical Stabilizer Torque Tube Removal

(1). Remove vertical stabilizers (Ref. Vertical Stabilizer Replacement).

(2). Remove horizontal tip plate access cover and disconnect YSAS torque tube (if installed) from vertical stabilizer bellcrank.

(3). Remove bellcrank from torque tube by removing expandable bolt.

(4). Remove cotter pin, locknut and bushing from torque tube. Remove torque tube by lifting upward.

B. Vertical Stabilizer Torque Tube Installation

(1). Slide torque tube from the top thru the horizontal stabilizer.

(2). Apply one layer of teflon tape (CM726) to threads of torque tube prior to installing locknut.

(3). Install locknut, hand tighten and adjust to a 0.005-0.010 inch (0.127-0.254 mm) gap; Install cotter pin.

NOTE: When installing the bellcrank, opening in bellcrank must face outboard.

(4). Install bellcrank, with opening facing outboard, on torque tube and install expandable bolt; Torque to **30 - 40 inch-pounds (3.39 - 4.52 Nm) plus drag torque**; Install cotter pin.

(5). Connect YSAS actuator to vertical stabilizer torque tube bellcrank. Torque nut to **30 - 40 inch-pounds (3.39 - 4.52 Nm)** and install cotter pin.

(6). Install end plate access covers.

(7). Install vertical stabilizer (Ref. Vertical Stabilizer Replacement).

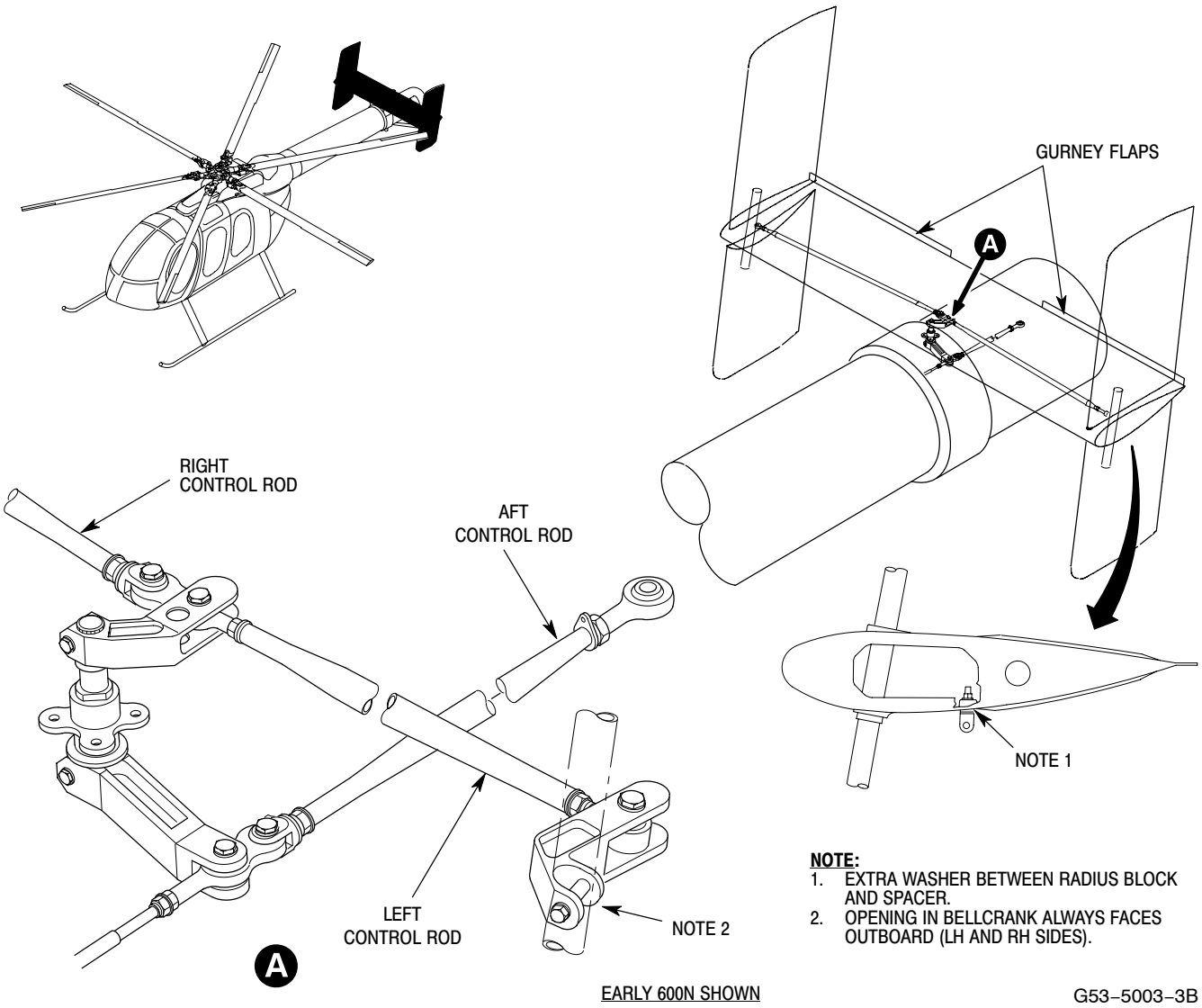

Figure 202. Stabilizer Installation without YSAS

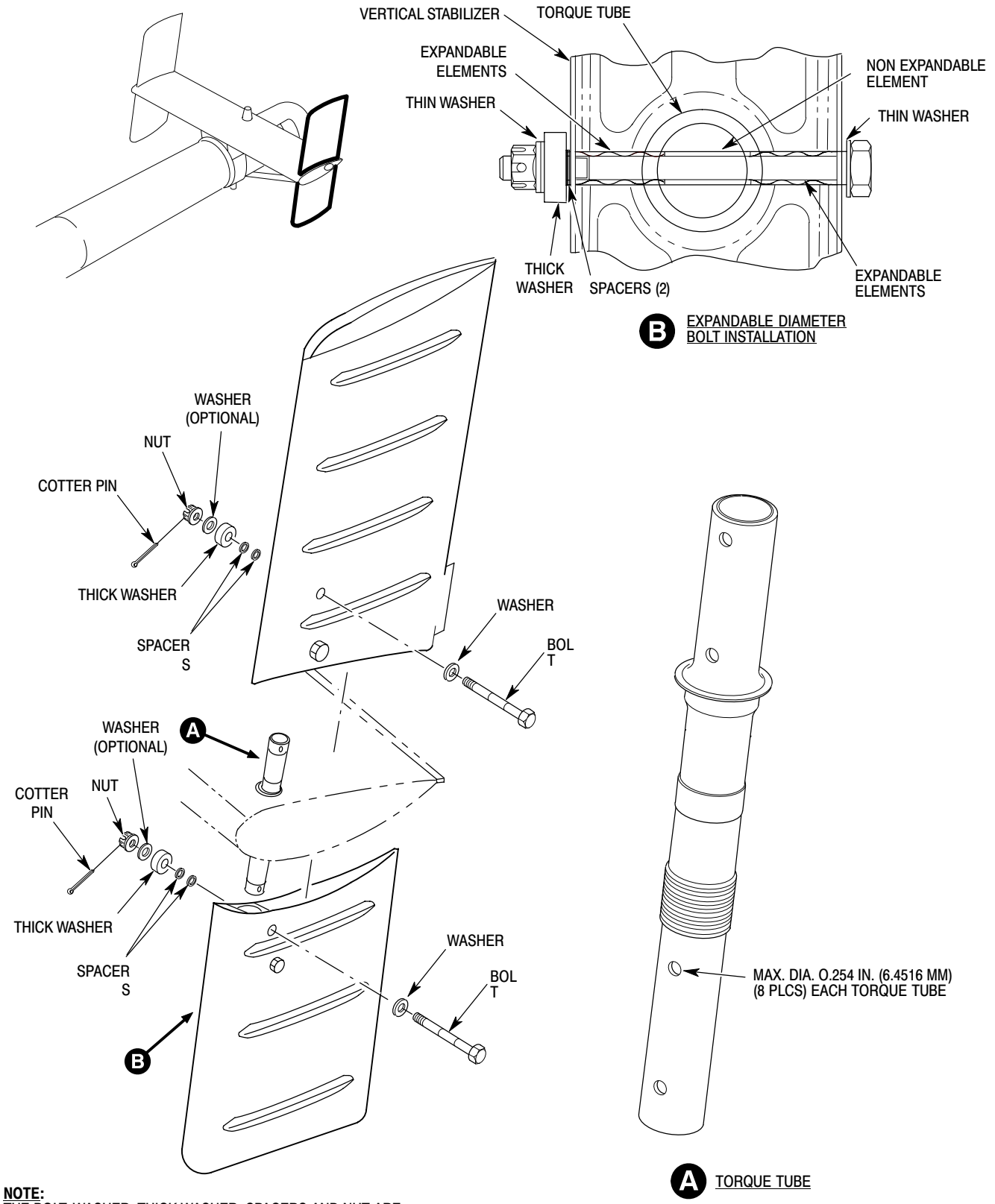

NOTE:
THE BOLT, WASHER, THICK WASHER, SPACERS AND NUT ARE COMPONENTS OF THE EXPANDABLE DIAMETER BOLT ASSEMBLY.

Figure 203. Vertical Stabilizer Installation with Expandable Bolts

10. Horizontal Stabilizer Repair

Refer to MDHI Field Service Representative.

11. Vertical Stabilizer Torque Tube and/or Bushing Replacement (Non-Bonded Bushings)

(Ref. Figure 201) The following procedure is for replacing the early style (non-bonded) torque tube bushings.

Consumable Materials (Ref. Section 91-00-00)

Item	Nomenclature
CM726	Tape, teflon

(1). Remove vertical stabilizers (Ref. Vertical Stabilizer Replacement).

(2). Remove horizontal tip plate access cover and disconnect YSAS torque tube (if installed) from vertical stabilizer bellcrank.

(3). Remove bellcrank from torque tube by removing expandable bolt.

(4). Remove cotter pin, locknut and bushing from torque tube. Remove torque tube by lifting upward.

(5). Remove bushing from bearing race of torque tube.

(6). Install one bushing on bearing race of torque tube and insert torque tube through fitting of horizontal stabilizer from the top downward.

(7). Apply one layer of teflon tape (CM726) to threads of torque tube prior to installing locknut.

(8). Install bushing and locknut, hand tighten locknut and adjust to a 0.005-0.010 inch (0.127-0.254 mm) gap; Install cotter pin.

NOTE: Ensure shouldered bushings are installed in bellcrank.

(9). Install bellcrank on torque tube and install expandable bolt and washers; Torque to **30 - 40 inch-pounds (3.39 - 4.52 Nm) plus drag torque**; Install cotter pin.

(10). Connect YSAS actuator to vertical stabilizer torque tube bellcrank. Torque nut to **30 - 40 inch-pounds (3.39 - 4.52 Nm)** and install cotter pin.

(11). Install end plate access covers.

(12). Install vertical stabilizer (Ref. Vertical Stabilizer Replacement).

12. Vertical Stabilizer Torque Tube and/or Bushing Replacement (Bonded Bushings)

(Ref. Figure 201) The following procedure is for replacing the current style (bonded) torque tube bushings.

Consumable Materials (Ref. Section 91-00-00)

Item	Nomenclature
CM222	1,1,1-Trichloroethane
CM402	Adhesive
CM726	Tape, teflon
CM802	Abrasive cloth, aluminum oxide

(1). Remove vertical stabilizers (Ref. Vertical Stabilizer Replacement).

(2). Remove horizontal tip plate access cover and disconnect YSAS torque tube (if installed) from vertical stabilizer bellcrank.

(3). Remove bellcrank from torque tube by removing expandable bolt.

(4). Remove cotter pin, locknut and bushing from torque tube. Remove torque tube by lifting upward.

CAUTION In the following steps, care must be taken to not damage the fibers of the horizontal stabilizer.

(5). Remove bushing(s) from horizontal stabilizer by gently working a sharp scraper between bushing and stabilizer.

(6). Sand excess sealant from horizontal stabilizer taking care not to disturb the composite fibers of the stabilizer.

(7). Clean faying surfaces of horizontal stabilizer, where bushings are to be

bonded, with 1,1,1-trichloroethane (CM222).

(8). Wipe dry using a clean dry rag and then allow to air dry for 15 minutes.

(9). Lightly abrade the faying surface of the new bushings with abrasive cloth (CM802) until all gloss is removed. Wipe clean with 1,1,1-trichloroethane.

(10). Wipe dry using a clean dry rag and then allow to air dry for 15 minutes.

(11). Mix adhesive (CM402) according to manufacturers instructions. Apply adhesive within 2 hours of cleaning.

(12). Apply a thin uniform layer of adhesive to faying surfaces.

CAUTION Do not apply too much pressure, damage to horizontal stabilizer may occur.

(13). Press the faying surfaces firmly together and maintain contact pressure or apply 50 psi (3.45 kPa) maximum for 24 hours at ambient temperature.

(14). Using 1,1,1-trichloroethane, clean excess adhesive from parts before adhesive has had time to cure.

(15). Slide torque tube from the top thru the horizontal stabilizer.

(16). Apply one layer of teflon tape (CM726) to threads of torque tube prior to installing locknut.

(17). Install locknut, hand tighten and adjust to a 0.005-0.010 inch (0.127-0.254 mm) gap; Install cotter pin.

(18). Install bellcrank on torque tube and install expandable bolt; Torque to **30 - 40 inch-pounds (3.39 - 4.52 Nm) plus drag torque**; Install cotter pin.

(19). Connect YSAS actuator to vertical stabilizer torque tube bellcrank. Torque nut to **30 - 40 inch-pounds (3.39 - 4.52 Nm)** and install cotter pin.

(20). Install end plate access covers.

(21). Install vertical stabilizer (Ref. Vertical Stabilizer Replacement).

13. Vertical Stabilizer Torque Tube Bushing Rework (Non-Bonded Bushings to Bonded Bushings)

(Ref. Figure 201) The following procedure is for converting the vertical stabilizer torque tube to the current 500N3980-3 bushings, 500N3970-3 locknuts and MS24665-361 cotter pins.

Consumable Materials
(Ref. Section 91-00-00)

Item	Nomenclature
CM222	1,1,1-Trichloroethane
CM402	Adhesive
CM726	Tape, teflon
CM802	Abrasive cloth, aluminum oxide

(1). Remove vertical stabilizers (Ref. Vertical Stabilizer Replacement).

(2). Remove cotter pins, locknuts and bushings, and scrap. Remove torque tube by lifting upward. Remove bushing and scrap.

(3). Clean faying surfaces of horizontal stabilizer, where bushings are to be bonded, with 1,1,1-trichloroethane (CM222).

(4). Wipe dry using a clean dry rag and then allow to air dry for 15 minutes.

(5). Lightly abrade the faying surface of the new bushings with abrasive cloth (CM802) until all gloss is removed. Wipe clean with 1,1,1-trichloroethane.

(6). Wipe dry using a clean dry rag and then allow to air dry for 15 minutes.

(7). Mix adhesive (CM402) according to manufacturers instructions. Apply adhesive within 2 hours of cleaning.

(8). Apply a thin uniform layer of adhesive to faying surfaces.

CAUTION Do not apply too much pressure, damage to horizontal stabilizer may occur.

(9). Press the faying surfaces firmly together and maintain contact pressure or apply 50 psi (3.45 kPa) maximum for 24 hours at ambient temperature.

(10). Using 1,1,1-trichloroethane, clean excess adhesive from parts before adhesive has had time to cure.

(11). Slide torque tube from the top thru the horizontal stabilizer.

(12). Apply one layer of teflon tape (CM726) to new 500N3970-3 locknut.

(13). Install locknut, hand tighten and adjust to a 0.005-0.010 inch (0.127-0.254 mm) gap; Install MS24665-361 cotter pin.

(14). Install bellcrank on torque tube and install expandable bolt; Torque to **30 - 40 inch-pounds (3.39 - 4.52 Nm) plus drag torque**; Install cotter pin.

(15). Install end plate access covers.

(16). Install vertical stabilizer (Ref. Vertical Stabilizer Replacement).

14. Vertical Stabilizer Torque Tube Bearing Race Replacement

(Ref. Figure 201) The following procedure is for removal of the bearing race from the vertical stabilizer torque tube. Some special tools will need to be manufactured for this procedure.

Consumable Materials
(Ref. Section 91-00-00)

Item	Nomenclature
CM234	Solvent, dry-cleaning
CM318	Primer
CM730	Tape, duct

Special Tools
(Ref. Section 91-00-00)

Item	Nomenclature
N/A	Arbor press

(1). Remove vertical stabilizers (Ref. Vertical Stabilizer Replacement).

(2). Remove vertical stabilizer torque tubes (Ref. Vertical Stabilizer Torque Tube Replacement).

(3). Fabricate the following tool for bearing race removal.

(a). Locate a steel plate of approximately 0.250 inch (6.35 mm) thickness.

(b). Drill a 1.510 inch (38.3540 mm) hole in the plate.

(c). Deburr edges of hole to prevent damage to torque tube.

(d). Apply tape (CM730) to tool to prevent damage to bearing race.

(4). Insert torque tube through the removal tool and install on arbor press.

CAUTION In the following steps, care must be taken to not damage the horizontal stabilizer torque tube.

(5). Place suitable device over torque tube end to protect tube from damage from arbor press.

(6). Remove bearing from the torque tube by gently pressing torque tube through the removal tool.

(7). Using solvent (CM234), clean primer residue from torque tube.

(8). Inspect torque tube for damage to bearing race contact surface.

(9). Fabricate the following tool for bearing race installation.

(a). Locate a steel plate of approximately 0.250 inch (6.35 mm) thickness.

(b). Drill a 1.390 inch (35.306 mm) hole in the plate.

(c). Deburr edges of hole to prevent damage to torque tube.

(d). Apply tape (CM730) to tool to prevent damage to bearing race.

(10). Insert bearing race into tool and mount on arbor press.

(11). Coat torque tube bearing race mating surface with primer (CM318).

CAUTION In the following steps, care must be taken to not damage the the horizontal stabilizer torque tube.

(12). Place suitable device over torque tube end to protect tube from damage from arbor press.

CAUTION In the following step, ensure bearing race is not cocked on torque tube, this will cause non-repairable damage to bearing race and torque tube.

(13). While primer is wet, press torque tube down through the bearing race until bearing race is tight against flange on torque tube.

(14). Inspect bearing race flanged surface to ensure no warpage occurred during installation.

(15). Reinstall vertical stabilizer torque tubes (Ref. Vertical Stabilizer Torque Tube Replacement).

(16). Reinstall vertical stabilizers (Ref. Vertical Stabilizer Replacement).

15. Stabilizer Troubleshooting

(Ref. Table 201)

Table 201. Troubleshooting Tailboom and Tail Surfaces

Symptom	Probable Trouble	Corrective Action
High frequency vibration	Fan assembly out of balance	Re–balance fan assembly.
	Loose fan blades	Replace and re–balance fan assy.
	Loose bolts/nuts on Horizontal or Vertical stabilizer	Inspect mounting hardware; adjust or replace as necessary.

NOTE: High frequency vibrations in helicopter can be caused by components in other systems (Ref. Sec. 64–00–00, 63–25–10, 63–25–30 and 71–00–00).

ensure that oil penetrates all sections of pin operating mechanism. Wipe excess oil from pin surfaces.

3. Main Rotor Blade and Damper Attach Pin Disassembly and Special Inspection

(Ref. Figure 603) This inspection is to be preformed in event of a main rotor blade strike.

Consumable Materials (Ref. Section 91-00-00)

Item	Nomenclature
CM217	Isopropyl alcohol

CAUTION Do not intermix bushings, spacers and thrust washers between bolts. Component parts make up a single bolt assembly.

(1). Remove adjusting nut and remove adjusting bushings, spacers and thrust washers from pin.

(2). Using brush and clean cloth, clean parts with isopropyl alcohol (CM217). Dry with clean cloth.

(3). Inspect pin as follows:

(a). Fluorescent inspect pin per MIL-STD-6866.

(b). Magnetic particle inspect thrust washers, bushings and spacer per MIL-STD-1949.

(4). Reassemble pin in sequence as follows; install thrust washer, three (3) adjustable bushings, spacer, three (3) adjustable bushings and secure with adjusting nut.

4. Main Rotor Blade Forward Tip Cap Inspection and Corrosion Protection

(Ref. Figure 603)

Consumable Materials (Ref. Section 91-00-00)

Item	Nomenclature
CM217	Isopropyl alcohol
CM232	Rust inhibitor spray

(1). Inspect tip caps for evidence of corrosion, with particular attention at mating area of blade skin to tip weight interface. Verify integrity of sealant coating.

(2). If damage is evident, remove tip caps and apply penetrating oil to blade tip weight area. Oil arrests any corrosion between blade skin and weight assembly.

(3). Using brush and clean cloth, clean area with isopropyl alcohol (CM217). Dry with clean cloth.

(4). Spray area with light film of rust inhibitor (CM232); then apply thin film of primer and paint lightly as required (Ref. Sec. 20-40-00).

5. Main Rotor Blade Upper and Lower Root Fitting Attach Lug and Lead-Lag Link Attach Lug Inspection (25 Hour)

(Ref. Figure 604 and Figure 605) The following procedure pertains to helicopters equipped with 369D21100-BSC thru -515 and 369D21102-BSC and -501 main rotor blades and/or 369H1203-BSC, -11, -21 and -31 lead-lag link assemblies.

Consumable Materials (Ref. Section 91-00-00)

Item	Nomenclature
CM805	Dye penetrant kit

NOTE: Main rotor blades and hub assemblies installed on helicopters operating in a salt water or corrosive environment should be cleaned and washed on a daily basis as a preventative measure to arrest corrosion (Ref. Main Rotor Hub Corrosion Prevention (Tri-Flow Wash Procedures)).

(1). Visually inspect exposed portion of all installed main rotor blade upper and lower root fitting attach lugs, and main rotor hub lead-lag link attach lugs, for broken or cracked lugs, corrosion or other damage to the lug areas.

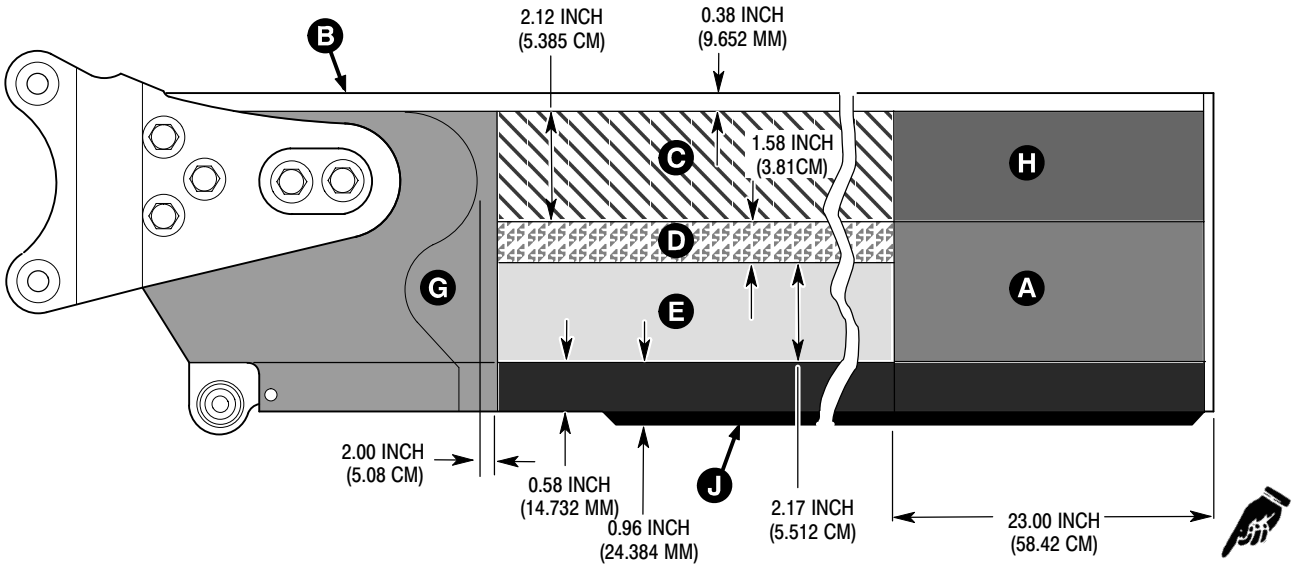

DENTS AND DEPRESSIONS					
AREA	MAXIMUM DEPTH WITHOUT REPAIR	MAXIMUM DEPTH WITH REPAIR	MAXIMUM ALLOWED AREA	MAXIMUM NUMBER OF DEFECTS	MINIMUM DISTANCE BETWEEN DEFECT CENTERS
A	0.015 INCH (0.381 MM)	0.062 INCH (1.575 MM)	1.5 INCH (3.81 MM) X 1.5 INCH (3.81 MM)	1	N/A
B	0.010 INCH (0.254 MM)	0.000	0.250 INCH (6.35 MM) X 0.25 INCH (6.35 MM)	2	18
C	0.000	0.000	0.000	NONE ALLOWED	N/A
D	0.005 INCH (0.127 MM)	0.030 INCH (0.762 MM)	1.5 INCH (3.81 MM) X 1.5 INCH (3.81 MM)	2	18
E	0.010 INCH (0.254 MM)	0.040 INCH (1.016 MM)	1.5 INCH (3.81 MM) X 1.5 INCH (3.81 MM)	2	18
F	0.010 INCH (0.254 MM)	0.040 INCH (1.016 MM)	1.5 INCH (3.81 MM) X 1.5 INCH (3.81 MM)	3	18
G	0.000	0.000	0.000	NONE ALLOWED	N/A
H	0.010 INCH (0.254 MM)	0.040 INCH (1.016 MM)	1.5 INCH (3.81 MM) X 1.5 INCH (3.81 MM)	1	N/A
J	0.010 INCH (0.254 MM)	0.350 INCH (8.89 MM) (NOTE 2)	1.5 INCH (3.81 MM) X 1.5 INCH (3.81 MM)	N/A	N/A

NOTES:
1. N/A - NOT APPLICABLE.
2. REFER TO TRIM TAB DAMAGE REPAIR.

G62-1002B

Figure 602. Main Rotor Blade Damage Limits for Dents and Depressions

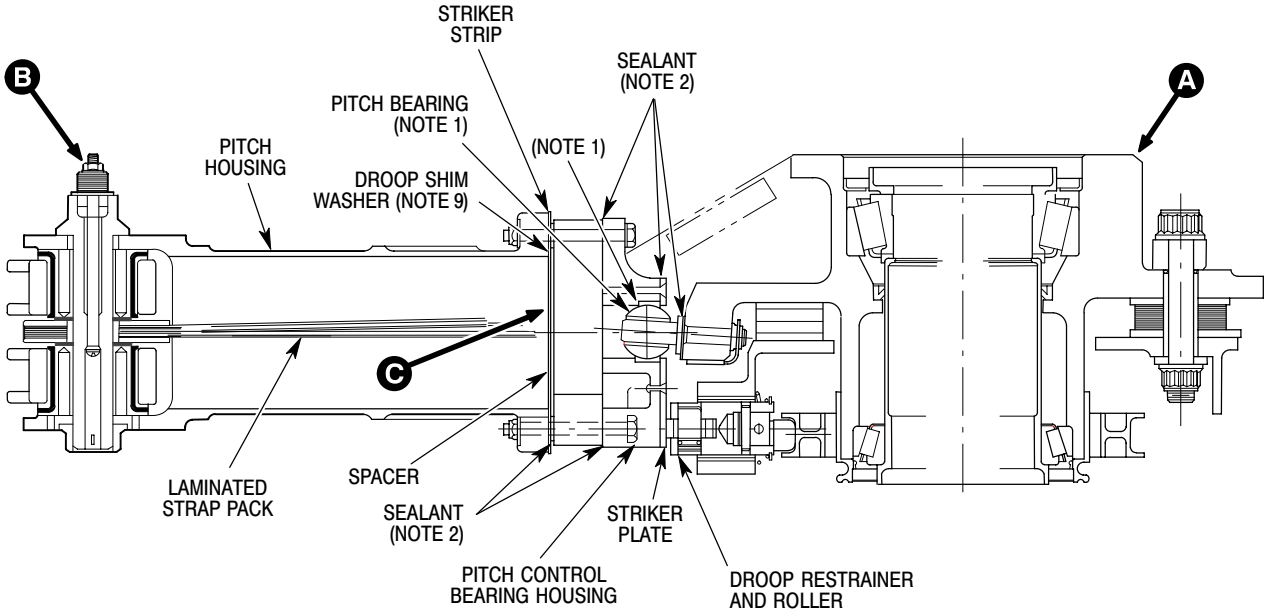

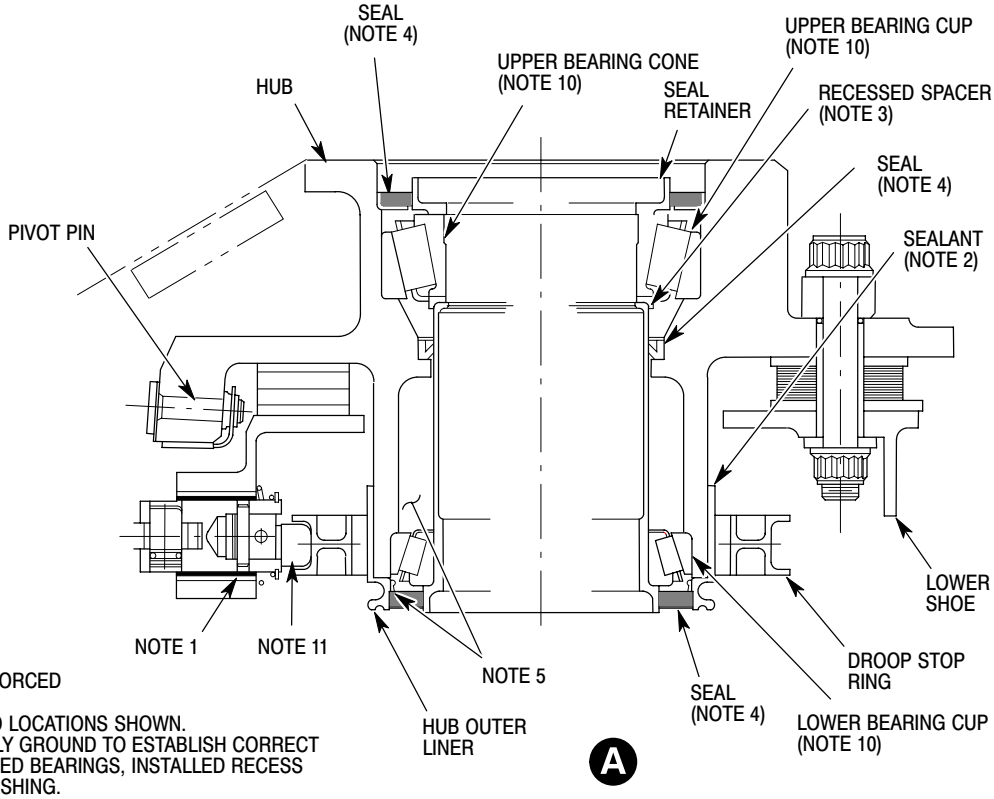

NOTES:

1. HEAVY LINES INDICATE REINFORCED TEFLON BEARINGS (TYPICAL)
2. SEALANT (CM425) APPLIED TO LOCATIONS SHOWN.
3. RECESSED SPACER SPECIALLY GROUND TO ESTABLISH CORRECT ROTATIONAL DRAG ON TAPERED BEARINGS, INSTALLED RECESS DOWN ON TOP OF SLEEVE BUSHING.
4. SEAL TO BE UPWARD.
5. BEARING AND CAVITY TO BE FILLED WITH GREASE (CM111).
6. EARLY CONFIGURATION MODIFIED BY HUGHES SERVICE NOTICE DN-3.
7. ON CURRENT CONFIGURATION, RIVET IS REPLACED BY SCREW, WASHER, AND NUT.
8. SEALANT (CM420) APPLIED TO SURFACES SHOWN.
9. DROOP SHIM WASHERS ARE INSTALLED AS REQUIRED TO OBTAIN PROPER ROTOR DROOP ANGLE.
10. DO NOT INTERMIX TIMKEN AND NTN BEARING CUPS AND CONES AT UPPER AND LOWER TAPERED BEARING LOCATIONS.
11. DROOP STOP FOLLOWER T-HEAD TO BE OFFSET AWAY FROM LOWER SHOE.

G62-2014-1B

Figure 805. Main Rotor Hub – Cross Section (Sheet 1 of 2)

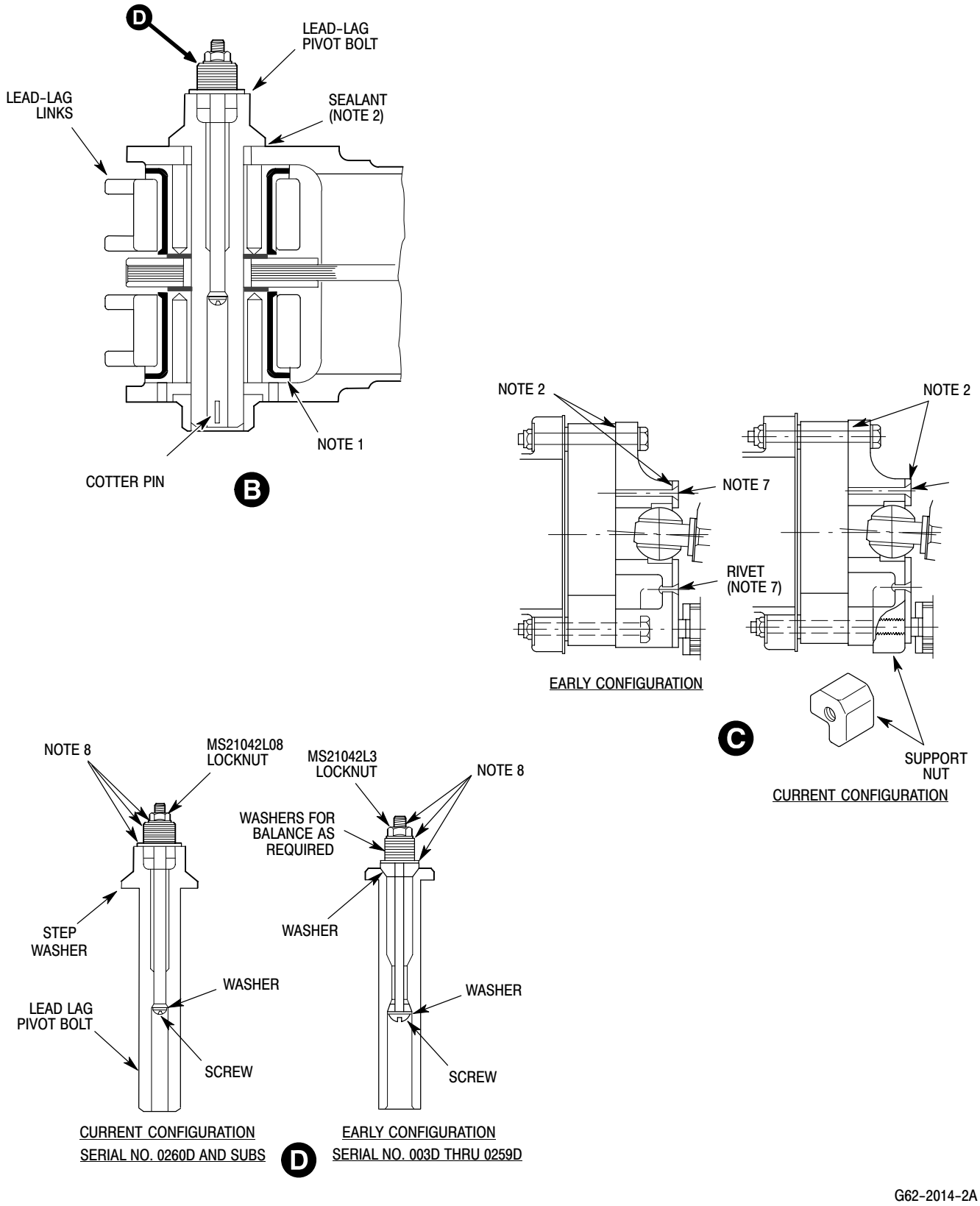

Figure 805. Main Rotor Hub – Cross Section (Sheet 2 of 2)

(b). (369FF) Secure tail rotor transmission to tailboom extension with four bolts, eight washers and four nuts. Torque nuts to **75 - 95 inch-pounds (8.47 - 10.73 Nm) plus drag torque**.

(5). Apply torque stripe paint.

(6). Between 2 and 10 hours of helicopter operation (to allow parts to seat), check the torque of each mounting nut as follows:

(a). Using the drag torque previously measured and noted, apply a torque load of **75 - 95 inch-pounds (8.47 - 10.73 Nm) plus the noted drag torque** (noted for each individual nut) to each mounting nut of the transmission.

(b). Re-apply torque stripe paint.

(7). Install tail rotor on tail rotor transmission (Ref. Sec. 64-20-00).

(8). Connect chip detector wire. Torque nut to **12 - 15 inch-pounds (1.36 - 1.69 Nm)**.

(9). Connect tail rotor drive shaft to main transmission (Ref. Sec. 63-15-10).

(10). Drain residual preservative oil and service transmission with lubricating oil (Ref. Sec. 12-00-00).

3. Tail Rotor Transmission Inspection

(Ref. Figure 201)

NOTE: If following inspections reveal damage, repair according to instructions in CSP-COM-5.

(1). Check transmission for leaks, cracks and corrosion. To evaluate oil leakage, refer to Fluid Leak Analysis (Ref. Sec. 12-00-00).

(2). Inspect Sta. 284 bellcrank hole for elongation; if elongation is suspected, measure hole diameter. Hole diameter to be 0.312-0.313 inch (7.9248-7.9502 mm) (Ref. CSP-COM-5 for bolt hole repair).

(3). Check input shaft for:

(a). Axial play by moving shaft in and out; transmission must be cold. Axial play is limited to 0.004 inch (0.102 mm) maximum.

(b). Measure runout; mark high and low extremes on outer end of shaft with grease pencil. Total indicated runout should be less than 0.002 inch (0.051 mm).

(4). Check output shaft for:

(a). Axial play; no axial movement is permitted.

(b). Measure runout; mark high and low extremes on outer end of shaft with grease pencil. Total indicated runout should be less than 0.0025 inch (0.0635 mm).

(5). While gently pulling out on input shaft, check gearset backlash:

(a). Two-bladed gearset backlash should be 0.004-0.008 inch (0.102-0.203 mm).

(b). Four-bladed gearset backlash should be 0.0025-0.0050 inch (0.0635-0.127 mm).

NOTE: Although not required, placing marks on end of output shaft provides guides for subsequent installation of tail rotor assembly in a manner that reduces chances of high frequency vibrations and lessens possibility of requirement for tail rotor balancing.

(6). Inspect all scoring or scratching of output shaft to determine if marks penetrate through cadmium plating and into steel shaft. Penetration of steel shaft is allowable to maximum depth of 0.010 inch (0.254 mm).

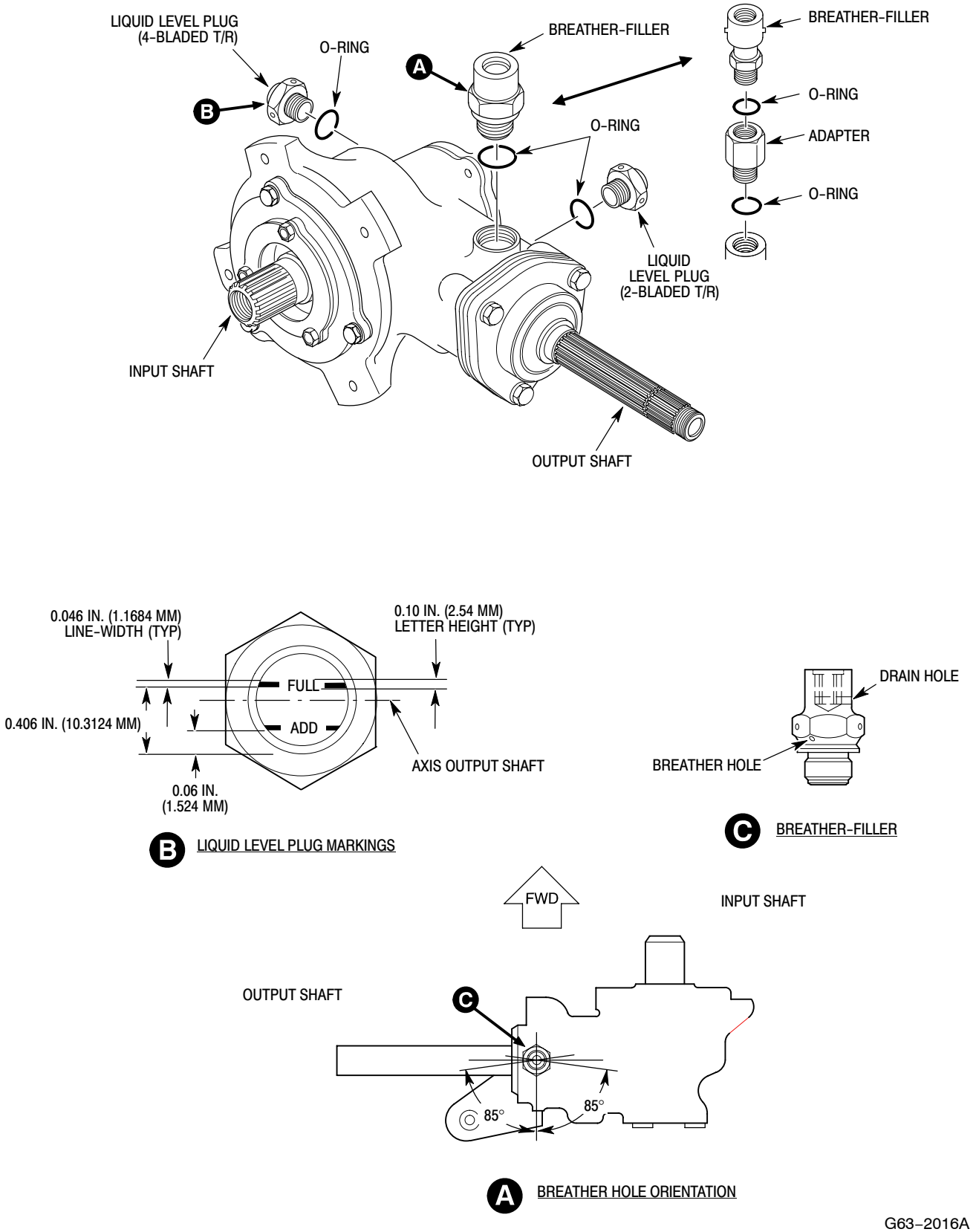

Figure 202. Replacement of Liquid Level Plug and Breather-Filler

TABLE OF CONTENTS

Para/Figure/Table	Title	Page
64-00-00	**Anti-Torque Assembly (369D/E/FF - 500/600N)**	**A**
Fault Isolation		**101**
1.	Tail Rotor Assembly	101
2.	Anti-Torque Fan Assembly	101
	Table 101. Troubleshooting Tail Rotor and Vibrations	101
64-00-05	**Four-Bladed Tail Rotor Assembly Initial Installation (369D/E)**	**A**
Initial Installation		**901**
1.	Four-Bladed Tail Rotor Initial Installation	901
A.	Tail Rotor and Transmission Initial Installation	901
B.	Existing Tail Rotor and Transmission Removal	901
C.	Four-Bladed Tail Rotor Transmission Build-Up	901
D.	Drive Shaft, Tail Rotor Transmission and Tail Rotor Installation	901
	Figure 901. Tail Rotor Index Stripe Requirements	902
E.	Tail Rotor Control Over-Center Trim System Rework	903
F.	Two-Bladed Over-Center Trim System Removal	903
G.	Four-Bladed Over Center Trim System Initial Installation	903
	Figure 902. Over Center Trim System Installation	904
H.	Four-Bladed Tail Rotor Controls Rigging	906
I.	Horizontal Stabilizer Tip Weight Removal	906
J.	N2 and NR (Rotor) Tachometer Indicator Replacement	906
K.	Four-Bladed Tail Rotor System Completion of Installation	906
L.	Weight and Balance	907
	Table 901. Weight and Balance Data	907
	Figure 903. Bracket Installation - Sta. 78.50 Canted Wall	908
64-10-00	**Tail Rotor Blades (369D/E/FF)**	**A**
Maintenance Practices		**201**
1.	Tail Rotor Blades	201
2.	Tail Rotor Blade Inspection	201
3.	Abrasion Strip Dye Penetrant and Tap Test Inspection	201
	Figure 201. Tail Rotor Blade	202
	Figure 202. Inspection of Tail Rotor Blade Abrasion Strip	203
4.	Tail Rotor Blade Tip Cap Repair	204
	Figure 203. Installation of Tip Cap-To-Tail Rotor Blade Rivets	205
5.	Tail Rotor Blade Replacement Procedure	206
6.	Tail Rotor Abrasion Strip Riveting	207
	Figure 204. Tail Rotor Blade Abrasion Strip Riveting	208

TABLE OF CONTENTS (Cont.)

Para/Figure/Table	Title	Page
7.	Tail Rotor Blade Abrasion Strip Modification	209
8.	Tail Rotor Blade Protective Tape Installation	210
	Figure 205. Tail Rotor Blade Abrasion Strip Modification	211
9.	Tail Rotor Blade Leading Edge Crack Inspection	212
	A. Tail Rotor Blades with New-Style Abrasion Strips	212
	B. Tail Rotor Blades with Old-Style Abrasion Strips	212
	Figure 206. Tail Rotor Blade Leading Edge Crack Inspection	214
64-20-00	**Tail Rotor Hub and Fork (369D/E/FF)**	**A**
	Maintenance Practices	**201**
1.	Tail Rotor Hub and Fork	201
2.	Tail Rotor Hub and Fork Replacement	201
	A. Tail Rotor Hub and Fork Removal	201
	Figure 201. Tail Rotor Hub and Strap Pack	202
	B. Tail Rotor Hub and Fork Installation	203
	Figure 202. Hub and Fork Assembly Installation (Two-Bladed)	204
	Figure 203. Hub and Fork Assembly Installation (Four-Bladed)	205
3.	Tail Rotor Hub and Fork Inspection	206
4.	Conical Bearing Inspection	206
5.	Elastomeric Fork Bearing Inspection	206
	Figure 204. Blade Flapping Resistance Check	207
6.	Elastomeric Bearing Care and Cleaning	207
64-25-30	**Anti-Torque Fan (500/600N)**	**A**
	Removal/Installation	**401**
1.	Anti-Torque Fan Assembly	401
2.	Anti-Torque Fan Replacement	401
	A. Anti-Torque Fan Removal	401
	B. Anti-Torque Fan Installation	401
3.	Anti-Torque Fan Blade Replacement	401
	A. Anti-Torque Fan Blade Removal	401
	B. Anti-Torque Fan Blade Installation	401
	Figure 401. Anti-Torque Fan	402
4.	Fan Blade Strap and Pitch Horn Replacement	403
	A. Fan Blade Strap and Pitch Horn Disassembly	403
	B. Fan Blade Strap and Pitch Horn Reassembly	403
5.	Retention Plate and Pitch Plate Replacement	403
	A. Retention Plate and Pitch Plate Disassembly	403

TABLE OF CONTENTS (Cont.)

Para/Figure/Table	Title	Page
	B. Retention Plate and Pitch Plate Resassembly	403
6.	Support Shaft Replacement	404
	A. Support Shaft Disassembly	404
	B. Support Shaft Reassembly	404
7.	Fan Balance Stud Replacement	404
	A. Fan Balance Stud Removal	404
	Figure 402. Anti-Torque Fan Support Shaft	405
	B. Fan Balance Stud Installation	406
8.	Pitch Horn Counterweight Set Screw Replacement	406
	Figure 403. Pitch Horn Counterweight Set Screw Replacement	407
Inspection/Check		**601**
1.	Anti-Torque Fan Inspection	601
2.	Support Shaft Inspection	601
3.	Anti-Torque Fan Liner (Felt Metal Seal) Inspection	601
4.	Fan Blade Inspection (100-Hour)	601
5.	Fan Pitch Slider Inspection	602
Repairs		**801**
1.	Anti-Torque Fan Liner (Felt Metal Seal) Replacement	801
	A. Anti-Torque Fan Liner (Felt Metal Seal) Removal	801
	B. Anti-Torque Fan Liner (Felt Metal Seal) Installation	801
2.	Anti-Torque Fan Liner (Felt Metal Seal) Machining Instructions	801
	A. Bench Calibration	801
	Figure 801. Anti-Torque Fan Liner (Felt Metal Seal)	802
	Figure 802. Anti-Torque Fan Liner Felt Metal Seal Cutting Tool Installation	803
	B. Installation and Operation of Felt Metal Seal Cutting Tool	804
3.	Anti-Torque Fan Bearing Regreasing	805
	Figure 803. Fan Bearing Regreasing Procedure	805
	Figure 804. Fan Bearing Regreasing Tool (ST614)	806
64-30-00 Tail Rotor Pitch Control Assembly (369D/E/FF)		**A**
Maintenance Practices		**201**
1.	Tail Rotor Pitch Control Assembly	201
2.	Tail Rotor Pitch Control Assembly Replacement	201
	A. Tail Rotor Pitch Control Assembly Removal	201
	Figure 201. Pitch Control Assembly - Wobble Check	201
	Figure 202. Swashplate-to-Pitch Control Housing Clearance	202
	B. Tail Rotor Pitch Control Assembly Installation	202

TABLE OF CONTENTS (Cont.)

Para/Figure/Table	Title	Page
‘3.	Tail Rotor Pitch Control Link Replacement	202
	Figure 203. Tail Rotor Pitch Control Assembly (Two-Bladed)	203
	Figure 204. Tail Rotor Pitch Control Assembly (Four-Bladed)	204
4.	Tail Rotor and Pitch Control Assembly Repair	205
5.	Tail Rotor Pitch Control Assembly Inspection	205
6.	Tail Rotor Blade Stop Inspection	206
7.	Tail Rotor Pitch Control Link Inspection	206
8.	Tail Rotor Conical Bearing Inspection	207
9.	Tail Rotor Pitch Bearing Inspection	207
10.	Tail Rotor Swashplate Bearing Regreasing	207
	Figure 205. Tail Rotor Swashplate Bearing Regreasing	207
	Figure 206. Tail Rotor Swashplate Bearing Regreasing Tool	208
	Figure 207. Tail Rotor Swashplate Holding Block	209
	Figure 208. Tang Washer Inspection and Application of Torque Stripe	210

3. Anti-Torque Fan Bearing Regreasing

Special Tools
(Ref. Section 91-00-00)

Item	Nomenclature
ST614	Fan bearing regreasing tool

(Ref. Figure 803 and Figure 804) The following procedure is for the regreasing of the 500N5364 and 500N7120 bearings.

Consumable Materials
(Ref. Section 91-00-00)

Item	Nomenclature
CM111	Grease, aircraft

NOTE:

- Ensure proper pitch plate and shaft support bearings are installed. 900R bearings are not to be used in the 500/600N helicopters.
- Refer to Figure 804 for instructions on the manufacture of a regreasing tool.

(1). Remove bearings from fan assembly (Ref. Support Shaft Disassembly).

(2). Carefully remove both seals from bearings (seals will be reused at reassembly).

(3). Inspect seals for damage; no damage is allowed.

(4). Install bearings between regreasing tools with a 4 inch (10 cm) 10-24 threaded bolt, washers and wing nut.

NOTE: The following procedure provides 100% grease fill. Normal grease fill is 30 to 50%. Excess grease will extrude past seals for several hours of operation until the proper level is met.

(5). Purge bearing with grease (CM111) until clean grease protrudes from all four holes in back of tool.

(6). Remove regreasing tool.

(7). Hand spin bearing to purge excess grease.

NOTE: Ensure seals are serviceable. If new seals are required, seals and bearings must come from the same vendor.

(8). Carefully install seals.

(9). Reinstall bearings (Ref. Support Shaft Reassembly).

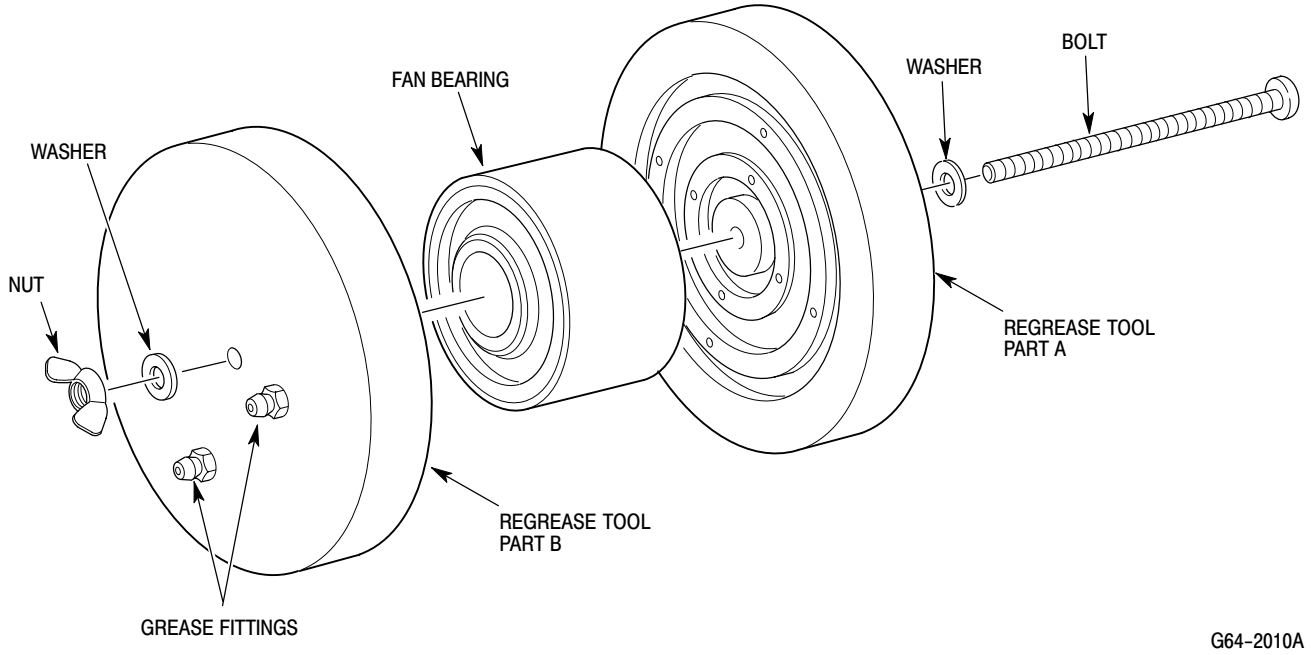

Figure 803. Fan Bearing Regreasing Procedure

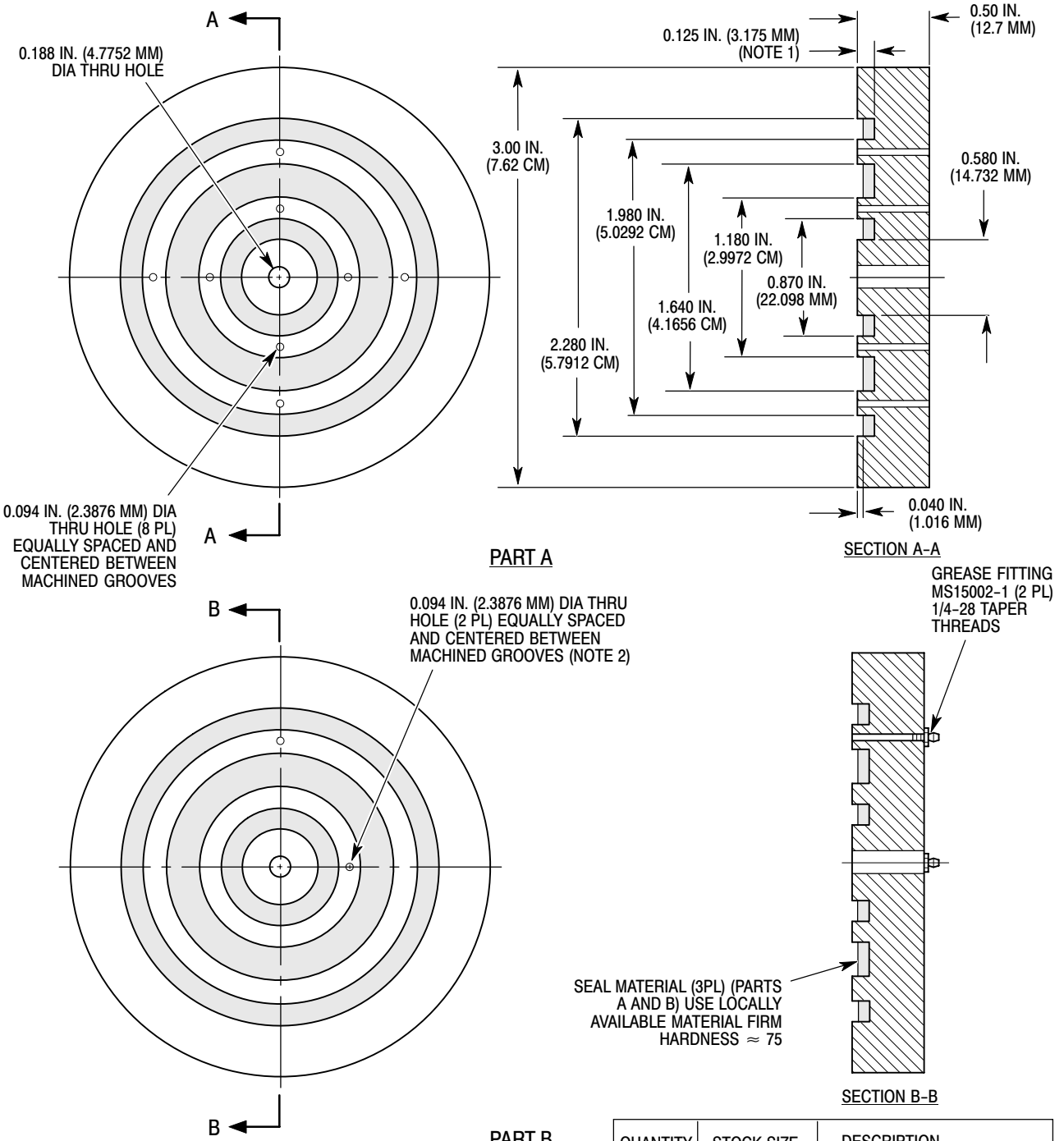

QUANTITY	STOCK SIZE	DESCRIPTION
1	4 x 4 x .50	PLATE
1	4 x 4 x .50	PLATE
1	AN23-64	BOLT
2	AN960D10L	WASHER
1	AN315-3R	NUT
2	MS15002-1	GREASE FITTING
1	M6855/2	RUBBER

NOTES:
1. DIMENSION MAY VARY DEPENDING ON SEAL MATERIAL THICKNESS AVAILABLE.
2. ALL OTHER DIMENSIONS SAME AS PART A.

MATERIALS:
1. 6061-T651 ALUMINUM PER QQ-A-250/11 OR EQUIVALENT.
2. SURFACE FINISH 125 RMS.
3. BREAK SHARP EDGES 0.002-0.015 IN. (0.0508-0.381 MM).
4. CHEMICAL FILM TREAT PER MIL-C-5541.
5. DIMENSION TOLERANCE ±0.010 IN. (±0.254 MM).
6. GROOVE DIAMETERS TO BE CONCENTRIC TO 0.188 IN. 4.7752 MM) DIA WITHIN 0.002 IN. (0.0508 MM).

G64-2009B

Figure 804. Fan Bearing Regreasing Tool (ST614)

(6). Install washer and nut on end of the bolt that extends through pitch arm. Torque nut to **50 - 60 inch-pounds (5.65 - 6.78 Nm)**; install cotter pin with wet primer (CM318).

(7). Check for clearance between pitch link and tail rotor hub pivot bolt.

(8). If removed from pitch arm bolt, install balance washer(s) of same color code as pitch control arm and secure with nut.

4. Tail Rotor and Pitch Control Assembly Repair

(Ref. Figure 203 and Figure 204)

Consumable Materials (Ref. Section 91-00-00)

Item	Nomenclature
CM801	Abrasive paper, silicon carbide

Repair allowable surface defects on fork and hub that may be reworked by using grade 320 abrasive paper (CM801) to round out and blend defect. Apply exterior surface touchup treatment and paint touchup (Ref. Sec. 20-30-00). (Repairable damage limits are defined in the Component Overhaul Manual.)

5. Tail Rotor Pitch Control Assembly Inspection

(Ref. Figure 203 and Figure 204)

Consumable Materials (Ref. Section 91-00-00)

Item	Nomenclature
CM115	Grease, oscillating bearing
CM234	Solvent, dry-cleaning
CM801	Abrasive paper, silicon carbide
CM803	Crocus cloth

(1). If tail rotor control system drag or friction is suspected, use spring scale (Ref. Figure 201) to measure drag (sliding friction) of pitch control assembly on shaft of tail rotor transmission. Note that pitch control links, Sta. 284 bellcrank and rubber boots must be detached from the assembly during drag check. If drag exceeds three pounds (13.4 N), remove pitch control assembly and clean swashplate and transmission shaft splines. Use solvent (CM234) and grade 400 abrasive paper (CM801) or crocus cloth (CM803). Clean again with solvent (CM234) and coat output shaft splines with light film of grease (CM115).

(2). Inspect fork and hub for scratches, nicks, dents, cracks, corrosion and similar surface defects. Check for wear caused by rubbing of aluminum support. Scratches and nicks that do not exceed 0.005 inch (0.127 mm) depth, 0.120 inch (3.048 mm) depth at inside corner of fork, may be repaired (Ref. COM). Worn areas resulting from rubbing of aluminum support up to 0.060 inch (1.524 mm) depth may be repaired (Ref. COM).

(3). Check wire-spring split ring halves for damage.

(4). If brinelling wear of inner surfaces of swashplate clevis ears is detected, 0.003 inch (0.076 mm) depth is allowable without rework or repair. For wear of greater depth, Ref. COM, for limits and allowable repairs.

(5). If there is evidence of swashplate contact with housing, check that minimum clearance of 0.015 inch (0.381 mm) exists through 360 degrees of rotation with axial loading applied. If contact is apparent or if axial play can be measured, replace swashplate or bearings (Ref. COM).

NOTE: Wobble may be accurately measured by attaching dial indicator support to tail rotor drive fork, with indicator probe contacting swashplate clevis ear. Use care not to allow pitch control assembly to slide on output shaft while measuring wobble.

(6). If pitch control assembly wobbles on transmission output shaft, up to 0.020 inch (0.508 mm) is allowable. If greater amount of wobble is present, replace swashplate, pitch control housing, bearings (Ref, COM) or the complete assembly.

(7). Check that hub-to-blade pitch arm clearance is 0.001-0.130 inch (0.025-3.302 mm).

(8). Inspect all bolts and nuts for security.

(9). Inspect boots for installation and deterioration.

(10). Perform following inspections for pitch control bearings at times specified (Ref. Sec. 05-20-00) and when bearing condition is questionable.

(a). Remove cotter pin, nut, washers and bolt securing Sta. 284 bellcrank to transmission. Separate pivot pin on bellcrank from pitch control assembly.

(b). Rotate pitch control housing by hand; check for rough, binding or hard turning. Inspect for grease leakage. If any of these conditions exist, remove pitch control assembly and inspect for further evidence of damage.

(c). Check that self-aligning bearing on underside of pitch control housing is adequately lubricated (packed approximately 40 percent full) with grease (CM115), is movable and is serviceable.

(d). Ensure that pivot pin on Sta. 284 bellcrank is lubricated with grease (CM115). Position bellcrank to engage pivot pin with pitch control assembly. Secure bellcrank to transmission with bolt, washers, nut and cotter pin.

NOTE: For more detailed information, refer to inspection, damage, wear and repair limits, and requirements for pitch control assembly (Ref. COM).

(11). Inspect for evidence of rotational binding by hand-turning tail rotor assembly a few turns while listening for unusual sounds. If condition is questionable, perform applicable inspection.

6. Tail Rotor Blade Stop Inspection

NOTE: Change of blade pitch angle when tail rotor is not rotating can produce audible snapping noise. Noise results as laminations of blade strap pack are twisted and bent without a centrifugal load. Such noise is normal and does not indicate a defect.

(1). Teeter blades back and forth and check for evidence of abnormal binding. Some stiffness is normal, especially when blade stop is newer.

(2). Inspect blade stop for deterioration. Be sure to check for cracking or splitting in stem area of stop. Allowable wear for rubber stop is to surface of aluminum support. Stop (and support) may be rotated 90 degrees if stop is excessively worn at contact point. Replace rubber stop if damaged, or if worn area cannot be rotated away from contact point.

NOTE: If replacement of stop support is required, replace with one-piece stop support and retaining nut.

(3). Check aluminum support for condition and wear. Replace aluminum support if damaged, or if excessive wear reduces clearance between tail rotor blade and tail boom to less than 0.50 inch (12.70 mm) minimum. Measure allowable clearance between tip of tail rotor blade and tail boom while holding hub against support, and with assistant applying full right tail rotor pedal.

NOTE: For any questionable items, refer to complete and detailed inspection, damage, wear and repair limits, and requirements for tail rotor assembly in COM.

7. Tail Rotor Pitch Control Link Inspection

Consumable Materials
(Ref. Section 91-00-00)

Item	Nomenclature
CM318	Primer

(1). Maximum axial play for bearing in pitch control link is 0.020 inch (0.508 mm).

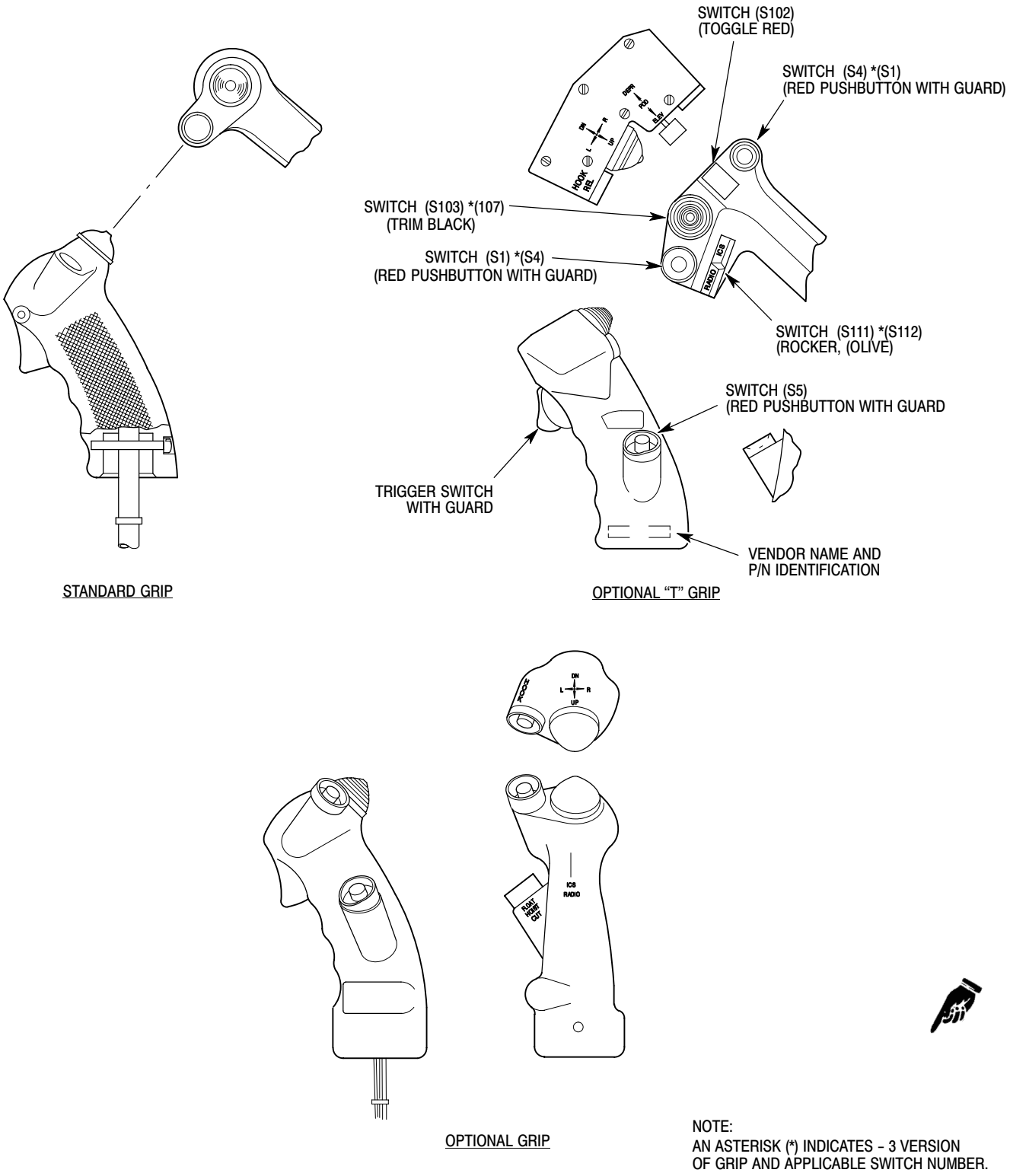

Figure 202. Cyclic Stick Grips

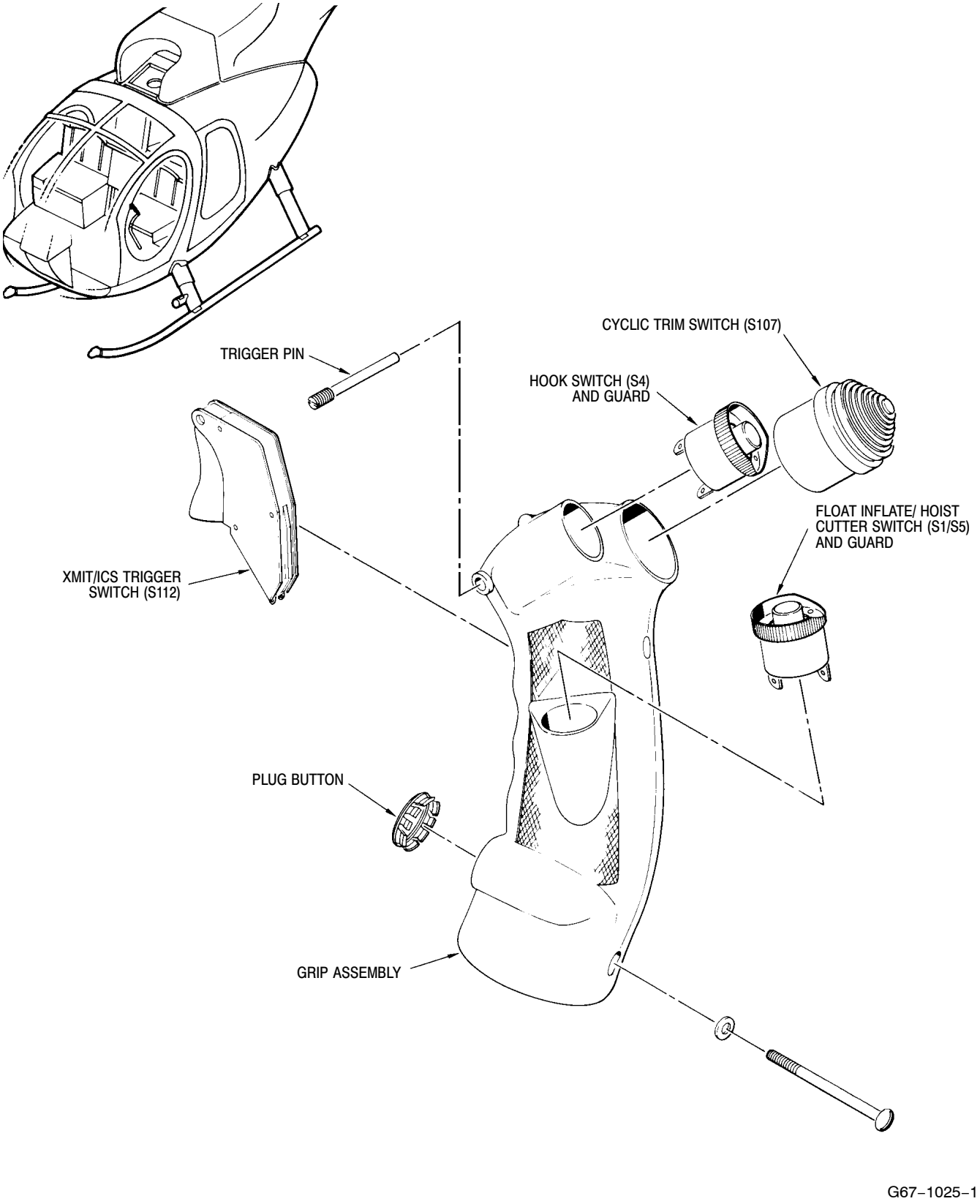

Figure 203. Cyclic Stick Grip Disassembly (Sheet 1 of 2)

Table 3. Special Tools

Item No.	Part No.	Nomenclature	Function	Vendor (Table 4)
		Ground Handling		
ST101	369A9905 BDW-DHH	Ground handling wheels (369D/E/FF - 500N) (600N)	Ground handling of helicopter.	
ST102	369H9801	Handle-jack assembly, ground handling (straight) (369D/E/FF - 500N)	Raising or lowering helicopter with ground handling wheels.	
ST103	369A9906	Handle-jack assembly, ground handling (offset) (369D/E/FF - 500N)	Raising or lowering helicopter with ground handling wheels when additional clearance is required.	
ST104	369H90126	Ground handling wheels (one side)	Ground handling of helicopter equipped with utility or emergency floats.	
ST105	HM-7M (S/N 121)	Tow bar (600N)	Towing of helicopter.	
		Jacking and Leveling		
ST201	369D29904 600N9904	Hoisting adapter (5-bladed) (6-bladed)	Hoisting entire helicopter or removing main rotor.	
ST202	369A2010-5	Jack fittings	Jacking, leveling or tiedown of helicopter.	
ST203	02-0520-0100	Hydraulic jack: 1-5 ton (900-4500 kg)	Jacking and leveling at Sta. 90.61.	
ST204	02-0234-0100	Hydraulic jack: 80-inch (203 cm) leg	Jacking and leveling at Sta. 197.78.	TS15
ST205	KS 5490 old KS 5549 new	Inclinometer	Angle of incidence tool, flight control rigging.	TS9
ST206	36-D-2844	Prop protractor	Measure angle of incident.	
		Main Transmission		
ST301	369H9807	Main transmission drain hose	Drain main transmission oil.	
		Engine		
ST401	369A9948 369D28602-80903 -1	Engine stand (250-C20B / 250-C20R/2) (250-C30 / 250-C47)	Engine support and transport dolly.	
ST402	369A8009 369D29905 369DSK410	Engine hoist (250-C20B) (250-C20R/2) (250-C30 / 250-C47)	Engine removal and installation.	
ST403	369H92537 369H92537-501	Engine compressor wash kit (369D/E - 500N) (369FF - 600N)	Clean engine compressor.	

Table 3. Special Tools (Cont.)

Item No.	Part No.	Nomenclature	Function	Vendor (Table 4)
ST404	6798292	Wrench, ground idle adjusting	Bendix fuel control idle speed adjustment.	
ST405	369H9925	Rigging fixture, collective stick	Gas producer rigging.	
ST406	369A7368-80901	Alignment fixture	Gas producer rigging.	
ST407	MS17990-315	Rigging pin	Gas producer rigging.	
ST408	#1741145	Test tool	Oil filter bypass indicator test.	TS6
		Flight Controls		
ST501	369H9925 369H9925-3	Collective rigging fixture (LH command) (369D/E/FF - 500N) (600N)	Rigging of main rotor collective controls.	
ST502	369A9927	Collective rigging fixture (RH command)	Rigging of main rotor collective controls.	
ST503	369A9930	Mixer rigging plate	Rigging of main rotor collective and cyclic controls.	
ST504	369D29929-9 600N9929-5	Longitudinal rigging fixture (LH command) (369D/E/FF - 500N) (600N)	Rigging of main rotor cyclic controls.	
ST505	369A9929-5 369D29929-5	Longitudinal rigging fixture (RH command) (369D/E/FF - 500N) (600N)	Rigging of main rotor cyclic controls.	
ST506	369A9928-9 369A9928-19	Lateral rigging fixture (LH command) (369D/E/FF - 500N) (600N)	Rigging of main rotor cyclic controls.	
ST507	369A9928-5	Lateral rigging fixture (RH command)	Rigging of main rotor cyclic controls.	
ST508	369D29936 369A7300-ATP-1	Collective bungee installation tool (369D/E/FF - 500N) (600N)	Remove bungee installation tool. Dismantle bungee assembly.	
ST509	Not used at this time.			
ST510	369D29985	Bungee spring compression tool rod and channel (369D/E/FF - 500N)	Compress collective bungee.	
ST511	369D29910-32501	Test fixture	Shop aid for rigging main rotor controls.	

Table 3. Special Tools (Cont.)

Item No.	Part No.	Nomenclature	Function	Vendor (Table 4)
		Anti-Torque		
ST601	500N9901-3	Rigging pin	Rigging of NOTAR® anti-torque flight controls.	
ST602	830006-809-00653	Spring tension removal tool	Removal of anti-torque bungee spring & splitter spring.	
ST603	500N5365-1-ATP1	Tip seal cutter	Anti-torque tip seal felt metal cutting tool.	
ST604	500N9505-1	Coupling socket	Fan & gearbox coupling socket.	
ST605	500N9506-1	Fan nut socket	Anti-torque fan removal.	
ST606	369D29931 369D29907	T/R swashplate rigging tool (2-bladed tail rotor) (4-bladed tail rotor)	Rig tail rotor controls.	
ST607	369D29823 369D29826	Adapter, torque wrench (2-bladed tail rotor) (4-bladed tail rotor)	Install tail rotor nut.	
ST608	369D29822-3	Pitch control assembly holding block	Secure tail rotor swashplate block to remove/install nut.	
ST609	369D29822-5	Adapter, torque wrench	Remove/install tail rotor swashplate housing bearing nut.	
ST610	369A1600-80902	Bushing wrench	Install and torque tail rotor hub threaded bushing.	
ST611	83006-809-00090-1	Arbor press fixture, 369A7951-5 bearing	Install tail rotor pitch control link bearings.	
ST612	83006-809-00090-15	Staking tool, 369A7951-5 bearing	Stake tail rotor pitch control link bearings.	
ST613	269A9232	Plug, bearing removal	Remove tail rotor pitch control housing bearings.	
ST614	500N5364-ATP1	Regreasing tool, fan bearing	Regreasing of the 500N5364 and 500N7120 fan bearings.	
		Main Rotor		
ST701	369A9829	Main rotor wrench assembly	Loosening/torquing of main rotor mast nut.	
ST702	369D29932 600N9932	Hub puller (369D/E/FF - 500N) (600N)	Separate main rotor hub from mast.	
ST703	369A9933 *369A9933-5	Main rotor hub driver	Seat main rotor hub.	
ST704	369D29957 old FRDH101 new	Adapter, torque wrench	Install main rotor drive shaft fasteners.	

Table 3. Special Tools (Cont.)

Item No.	Part No.	Nomenclature	Function	Vendor (Table 4)
ST705	369A9825	Pitch bearing stud wrench	Remove main rotor hub pitch bearing pivot pin.	
ST706	83006-809-00090 -1	Arbor press fixture (369A7951-5 bearing)	Install main rotor pitch housing bearings.	
ST707	83006-809-00090 -15	Staking tool (369A7951-5 bearing)	Staking main rotor pitch housing bearings.	
ST708	83006-809-00088	Staking tool (pilot and punch) (369A7951-45 bearing)	Install pitch control housing bearings and swage rings.	
ST709	3006-809-00090 -1/-8	Arbor press fixture (369A7951-15 bearing)	Install main rotor blade bearings.	
ST710	3006-809-00090 -15/-20	Staking tool (369A7951-15 bearing)	Stake main rotor blade bearings.	
		Fuel		
ST801	MITYVACR #4000	Hand operated vacuum pump kit	Pump down airframe and engine fuel systems for vacuum leak check.	TS13
ST801-1	AN840-D	Nipple, hose	Vacuum pump adaptive hardware.	
ST801-2	AN910-1D	Coupling		
ST801-3	AN816-4D	Nipple		
ST801-4	AS3084-04	O-ring		
ST802	369A8100-80902	Spanner wrench	Fuel cross-over fitting torquing.	
		Track and Balance		
ST901	369D29942	Tip cap assembly	Tracking main rotor blades.	
ST902	369H9928	Main rotor blade fixture and tab bending tool	Adjusting main rotor blade tab angle/blade track.	
ST903		Balancer/analyzer instrument kit	Track and balance of dynamic components.	TS5
		Electrical / Instruments / Avionics		
ST1001	RXT20-5 (extract) RTM20-9 (insert)	HYTIP insertion/extraction tool.	Install/remove HYTIP electrical contacts in terminal block modules.	TS4
ST1002	M8ND N14HCT2	HYTOOL M8ND and N14HCT	Crimp MINILOK and MODULOK terminal block contact tips on electrical wire.	TS4
ST1003	107-0970	Hand operated crimping tool (with positioners 107-0976 and 107-0977)	Crimp removable contacts in rectangular connectors.	TS18

Table 3. Special Tools (Cont.)

Item No.	Part No.	Nomenclature	Function	Vendor (Table 4)
ST1004	107R1001 107-1015	Contact removal tool / Contact insertion tool	Remove and insert removable contacts in rectangular connectors.	TS18
ST1005	CEIT 20	Insertion/extraction tool (20 Wire Mate connector)	Connect/disconnect No. 20 Wire Mate electrical connectors.	TS8
ST1006	CEIT 16	Insertion/extraction tool (16 Wire Mate connector)	Connect/disconnect No. 16 Wire Mate electrical connectors.	TS8
ST1007	CTJ-RO6	Deutsche module removal tool	Remove terminal block modules from instrument panel terminal block frames.	
ST1008	46673	Crimping tool	Thermocouple harness terminal lugs.	TS1
ST1009	^931	Voltmeter	Measure voltage.	TS17
ST1010	^260-7	Volt-ohmmeter	Measure resistance and voltage.	TS14
ST1011	**2312-G-8	Turbine temperature indicating system test set	Test and calibrate TOT indicating system.	TS2
ST1012	**BH112JA-36	Jetcal tester	Test and calibrate TOT indicating system.	TS7
ST1013	500N9701	Yaw S.A.S. test box	Anti-Torque stability augmentation system control rigging.	TS10
ST1014	DPI 603	Pressure calibrator	Test and calibrate torque indicating system (600N).	TS20
		Miscellaneous		
ST2001	369H4009	Pitot tube cover	Pitot Tube protection.	
ST2002	369H6661-1	Blade socks	Main rotor blade tiedown.	
ST2003	369D29913-37	Main rotor blade storage rack (369D/E/FF - 500N)	Store main rotor blades. Blade folding pole included.	
ST2004	369H9803-503	Air inlet fairing cover	Air inlet cover.	
ST2005	369H9804-101	Engine exhaust cover	Engine exhaust duct cover.	
ST2006	51-C-887	Sleeve swage, oval C-type	Particle separator installation.	TS12
ST2007	C-6000	Rivnut installation speed header	Particle separator installation.	TS3
ST2008	C-3576	Rivnut keyway cutter	Particle separator installation.	TS3
ST2009	HG85-10	Inspection gauge	Lockbolt installation inspection.	
ST2010	369D29983	Adapter, torque wrench (369D/E/FF)	Torque tailboom attachment bolts.	

Table 3. Special Tools (Cont.)

Item No.	Part No.	Nomenclature	Function	Vendor (Table 4)
ST2011	369A6001-50506 -1	Left landing gear foot drill jig	Enlarge holes in lockbolt fastened landing gear strut to install machine-bolt-attached skids.	
ST2012	369A6001-50506 -2	Right landing gear foot drill jig	Enlarge holes in lockbolt fastened landing gear strut to install machine-bolt-attached skids.	
ST2013	WSI-HT-12AS	Bushing installation tool (WSI-B-12AS grommet)	Install tail rotor control rod grommets.	TS16
ST2014	369D23601-80910	Angle measuring tool	Check horizontal stabilizer angle of incidence.	

^ Primary selection. Any equivalent meter with an accuracy capable of measuring voltage within 0.25% full scale range may be used.

* Hammer and handle same as 369A9933; –7 driver replaces –3 driver.

** Either tester may be used.

Table 4. Tool Manufacturer/Supplier Number

Number	Name
TS1	AMP Inc. 441 Friendship Rd. Harrisgurg, PA 17111 Phone: (717) 564–0100 FAX: (717) 986–7575
TS2	Barfield Instrument Corporation 4101 NW 29th Street P.O. Box 02567 Miami, FL 33102
TS3	B.F. Goodrich Co. Aerospace Products Akron, OH
TS4	Burndy Corp. Norwalk, CT
TS5	Chadwich–Helmuth 4601 N. Arden Drive El Monte, CA 91731–1299
TS6	Facet Enterprises Inc. 8439 Traid Dr. Greensboro, NC 27409
TS7	Howell Instrument Inc.
TS8	I.T.T. Cannon Electric 3208 Humboldt St. Los Angeles, CA 90031
TS9	Kell–Strom Tool Company 214 Church Street Wethersfield, CT
TS10	MD Helicopters Inc. 5000 E. McDowell Road Mesa, AZ 85215–9797
TS11	MD Helicopters Inc. Field Fabricated
TS12	National Telegraph Supply Co. Cleveland, OH
TS13	Neward Enterprises Inc. P.O. Box 725 Cucamonge, CA 91730 714–987–8975
TS14	Simpson
TS15	Tronair South 1740 Eber Road Holland, OH 43528
TS16	Western Sky Industries 21300 Cloud Way Hayward, CA 94545
TS17	Weston
TS18	Winchester Electronics, Division of Litton Industries Main St. and Hillside Ave. Oakville, CT 06779
TS19	Daniels Manufacturing Corp. 526 Thorpe Road Orlando, FL 32824 Phone: (407) 855–6161 FAX: (407) 855–6884
TS20	Druck Incorporated 4 Dunham Drive New Fairfield CT 06812 Phone: (203) 746–0400 FAX: (203) 746–2494 E–mail: druck.inc@druck.com

This Page Intentionally Left Blank