Manual: CSP-HMI-2, Handbook of Maintenance Instructions
Models: 369D/E/FF - 500/600N Helicopters
Issued: 31 October 1990
Revision 41: 03 March 2008

FILING INSTRUCTIONS:

1. Before inserting this change, ensure the manual is current.
   Check the existing List of Effective Pages in the manual to ensure all prior revisions are inserted. **(Do not insert this revision if prior revisions are not inserted)**.
2. Incorporate this change by removing old pages and inserting new pages as indicated below.

Remove Pages	Insert Pages
Cover/Title	
Cover/Title	Cover/Title
List of Effective Pages	
A thru J	A thru J
Sevice Bulletins	
7 and 8	7 and 8
04–00–00	
1 thru 14	1 thru 14
05–50–00	
9 and 10	9 and 10
20–00–00	
i and ii	i and ii
63–20–25	
203 and 204	203 and 204
63–21–00	
411 and 412	411 and 412
601 and 602	601 and 602
64–25–30	
401 thru 408	401 and 408
91–00–00	
3 thru 22	3 thru 22

This Page Intentionally Left Blank

MDHI MODEL HELICOPTERS

MODELS 369D/E/FF – 500/600N

Basic Handbook of Maintenance Instructions

(CSP–HMI–2)

SERVICING AND MAINTENANCE

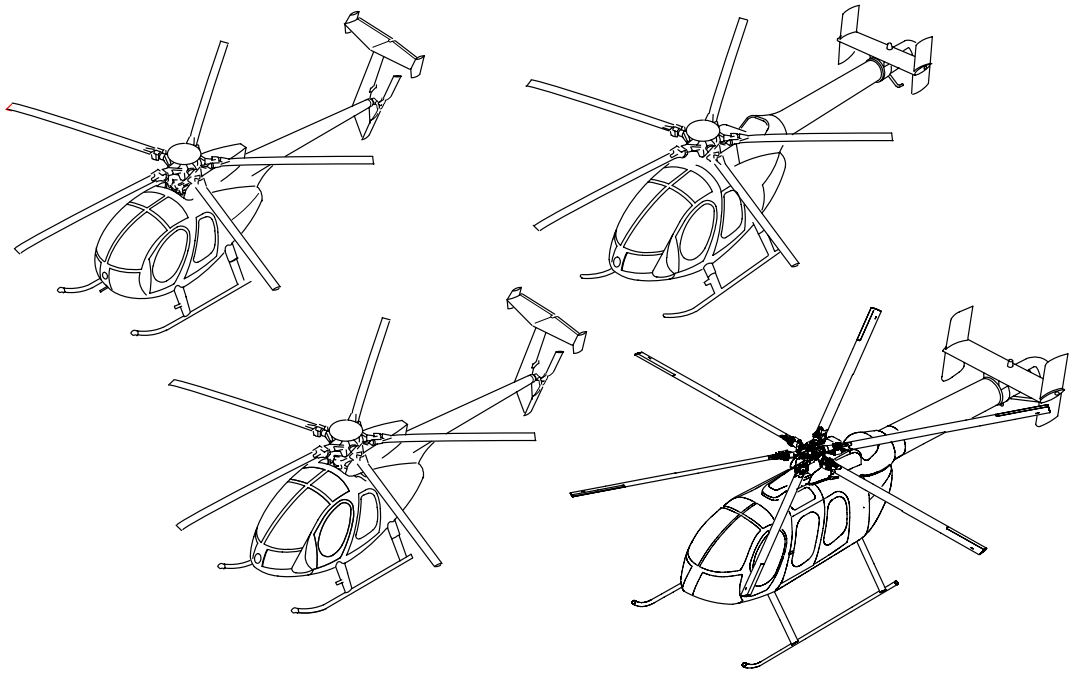

MD Helicopters, Inc.
4555 East McDowell Road
Mesa, Arizona 85215–9734

Copyright © 1999-2008 by MD Helicopters, Inc.
All rights reserved under the copyright laws.

Issued: 31 October 1990
Revision No. 41: 03 March 2008

PROPRIETARY RIGHTS NOTICE

The technical data and information contained in this publication is the property of and proprietary to MD Helicopters, Inc. and is not to be disclosed or reproduced in whole or in part without the written consent of MD Helicopters, Inc.

RESTRICTED USE

MDHI provides this manual for use by owners, operators and maintainers of MDHI products and authorized parts. Use by STC or PMA applicants or holders as documentation to support their certificates is not an authorized use of this manual and is prohibited. MDHI takes no responsibility for customer's use of parts manufactured under an STC or PMA when this manual is used as documentation with the Federal Aviation Administration to justify the STC or PMA. Use of unauthorized parts on MDHI products will void the MDHI warranty offered to the customer on components and may void the warranty on the helicopter.

MD Helicopters, Inc.
4555 East McDowell Road
Mesa, Arizona 85215–9734

LIST OF EFFECTIVE PAGES

INSERT LATEST CHANGE PAGES, DESTROY SUPERSEDED PAGES

The highest revision number indicates pages changed, added or removed by the current change.

Date of original and revision pages are:

Original	31 October 1990
Revision 1	29 March 1991
Revision 2	10 May 1991
Revision 3	09 September 1991
Revision 4	20 January 1992
Revision 5	24 August 1992
Revision 6	21 December 1992
Revision 7	01 June 1993
Revision 8	23 July 1993
Revision 9	22 April 1994
Revision 10	26 September 1994
Revision 11	18 January 1995
Revision 12	06 October 1995
Revision 13	31 May 1996
Revision 14	13 September 1996
Revision 15	15 November 1996
Revision 16	06 January 1997
Revision 17	24 February 1997
Revision 18	17 October 1997
Revision 19	16 December 1997
Revision 20	01 June 1998
Revision 21	24 August 1998
Revision 22	10 March 1998
Revision 23	01 June 1999
Revision 24	07 December 1999
Revision 25	28 April 2000
Revision 26	17 August 2000
Revision 27	09 October 2000
Revision 28	30 November 2000
Revision 29	11 May 2001
Revision 30	11 July 2001
Revision 31	05 November 2001
Revision 32	18 March 2002
Revision 33	24 June 2002
Revision 34	21 August 2003
Revision 35	20 May 2004
Revision 36	11 November 2004
Revision 37	13 December 2005
Revision 38	25 May 2006
Revision 39	10 April 2007
Revision 40	10 November 2007
Revision 41	03 March 2008

Cover/Title

Cover/Title . . . . . Revision 41

Change Request

CRi and CRii . . . . . N/A

Temporary Revision

1 and 2 . . . . . Revision 40

List of Effective Pages

A thru J . . . . . Revision 41

Table of Content

i and ii . . . . . Revision 29
iii . . . . . Revision 34
iv . . . . . Revision 38
v and vi . . . . . Revision 29

Bulletins

1 . . . . . Revision 23
2 . . . . . Revision 24
3 and 4 . . . . . Revision 23
5 and 6 . . . . . Revision 24
7 . . . . . Revision 41
8 . . . . . Revision 23
9/(10 blank) . . . . . Revision 24

Chapter 01

i/(ii blank) . . . . . Revision 26

01–00–00

1 . . . . . Revision 26
2 thru 4 . . . . . Revision 23
5 and 6 . . . . . Revision 26
7 . . . . . Revision 29
8 . . . . . Revision 28
201 . . . . . Revision 23
202 . . . . . Revision 40
203 . . . . . Revision 23
204 . . . . . Revision 26
205 thru 208 . . . . . Revision 23
209 . . . . . Revision 36
210 . . . . . Revision 30
211 and 212 . . . . . Revision 36

Chapter 04
i and ii . . . . . Revision 34
04–00–00
1 thru 14 . . . . . Revision 41
04–00–01
1/(2 blank) . . . . . Revision 26
Chapter 05
i and ii . . . . . Revision 38
05–00–00
1 thru 4 . . . . . Revision 38
05–10–00
1 . . . . . Revision 34
2 . . . . . Revision 40
3 . . . . . Revision 37
4 . . . . . Revision 34
05–20–00
1 and 2 . . . . . Revision 39
3 . . . . . Revision 40
4 thru 6 . . . . . Revision 35
7 thru 12 . . . . . Revision 39
05–20–10
1 thru 3 . . . . . Revision 39
4 . . . . . Revision 38
05–20–15
1 . . . . . Revision 29
2 and 3/(4 blank) . . . . . Revision 31
05–20–20
1 . . . . . Revision 36
2 thru 4 . . . . . Revision 37
5 . . . . . Revision 38
6 . . . . . Revision 36
05–50–00
1 thru 7 . . . . . Revision 24
8 . . . . . Revision 26
9 . . . . . Revision 41
10 . . . . . Revision 34
Chapter 06
i and ii . . . . . Revision 34
06–00–00
201 thru 205 . . . . . Revision 23
206 . . . . . Revision 39
207 thru 210 . . . . . Revision 23
211 . . . . . Revision 36
212 . . . . . Revision 34
Chapter 07
i/(ii blank) . . . . . Revision 23
07–00–00
201 thru 206 . . . . . Revision 23
Chapter 08
i/(ii blank) . . . . . Revision 23
08–00–00
201 thru 203/(204 blank) . . . . . Revision 23
08–10–00
201 . . . . . Revision 39
202 and 203 . . . . . Revision 27
204 thru 210 . . . . . Revision 23
211 . . . . . Revision 36
212 thru 217/(218 blank) . . . . . Revision 23
Chapter 09
i/(ii blank) . . . . . Revision 23
09–00–00
201 thru 204 . . . . . Revision 23
Chapter 10
i/(ii blank) . . . . . Revision 23
10–10–00
201 thru 204 . . . . . Revision 23
10–20–00
201 thru 203/(204 blank) . . . . . Revision 23
10–30–00
201 thru 206 . . . . . Revision 23
Chapter 11
i/(ii blank) . . . . . Revision 23
11–00–00
201 thru 217/(218 blank) . . . . . Revision 23
11–40–00
201 thru 211/(212 blank) . . . . . Revision 23
Chapter 12
i . . . . . Revision 23
ii . . . . . Revision 32
12–00–00
301 and 302 . . . . . Revision 23
303 . . . . . Revision 24
304 . . . . . Revision 34
305 . . . . . Revision 26
306 and 307 . . . . . Revision 24
308 . . . . . Revision 26
309 . . . . . Revision 23
310 and 311 . . . . . Revision 32
312 . . . . . Revision 23

Chapter 18
i thru iii/(iv blank) . . . . . Revision 23
18–10–00
201 . . . . . Revision 23
202 . . . . . Revision 31
203 and 204 . . . . . Revision 37
401 thru 404 . . . . . Revision 23
501 . . . . . Revision 23
502 . . . . . Revision 34
503 thru 505 . . . . . Revision 23
506 and 507 . . . . . Revision 24
508 and 509 . . . . . Revision 23
510 . . . . . Revision 39
18–10–60
201 . . . . . Revision 23
202 and 203/(204 blank) . . . . . Revision 31
401 thru 404 . . . . . Revision 23
501 . . . . . Revision 23
502 . . . . . Revision 34
503 thru 509 . . . . . Revision 23
510 . . . . . Revision 37
511 and 512 . . . . . Revision 23
18–20–00
201 . . . . . Revision 34
202 and 203 . . . . . Revision 23
204 . . . . . Revision 34
205 . . . . . Revision 39
206 . . . . . Revision 23
18–20–30
201 thru 205/(206 blank) . . . . . Revision 23
Chapter 20
i and ii . . . . . Revision 41
20–10–00
201 thru 206 . . . . . Revision 38
20–20–00
201 and 202 . . . . . Revision 23
20–30–00
201 and 202 . . . . . Revision 23
203 thru 206 . . . . . Revision 34
20–40–00
201 thru 204 . . . . . Revision 23
20–90–00
201 . . . . . Revision 38
202 thru 204 . . . . . Revision 40
Chapter 21
i and ii . . . . . Revision 23
21–10–00
201 thru 204 . . . . . Revision 23
21–40–00
201 thru 207 . . . . . Revision 23
208 . . . . . Revision 27
209 . . . . . Revision 37
210 . . . . . Revision 23
901 thru 911/(912 blank) . . . . . Revision 23
Chapter 25
i . . . . . Revision 24
ii thru vii/(viii blank) . . . . . Revision 23
25–00–00
1 and 2 . . . . . Revision 23
25–10–00
201 thru 205 . . . . . Revision 23
206 . . . . . Revision 24
207 and 208 . . . . . Revision 23
25–15–00
201 thru 204 . . . . . Revision 23
901 and 902 . . . . . Revision 23
25–20–00
201 thru 211/(212 blank) . . . . . Revision 23
25–21–00
201/(202 blank) . . . . . Revision 23
901 thru 908 . . . . . Revision 23
25–30–00
201 thru 214 . . . . . Revision 23
25–40–00
201 thru 207/(208 blank) . . . . . Revision 23
25–50–00
101 thru 106 . . . . . Revision 23
401 thru 408 . . . . . Revision 23
601 and 602 . . . . . Revision 23
901 thru 907/(908 blank) . . . . . Revision 23
25–60–00
201 and 202 . . . . . Revision 23
25–63–00
201 thru 216 . . . . . Revision 23
901 thru 910 . . . . . Revision 23
Chapter 26
i/(ii blank) . . . . . Revision 23
26–10–00
201 thru 203/(204 blank) . . . . . Revision 23

26-20-00
201 and 202 . . . . . Revision 23

Chapter 28
i . . . . . Revision 19
ii . . . . . Revision 37
iii and iv . . . . . Revision 28
v thru vii/(viii blank) . . . . . Revision 31

28-00-00
1 and 2 . . . . . Revision 19
101 . . . . . Revision 29
102 and 103 . . . . . Revision 19
104 . . . . . Revision 23
201 and 202 . . . . . Revision 19
401 thru 414 . . . . . Revision 19
415 and 416 . . . . . Revision 36
417 thru 422 . . . . . Revision 19
501 thru 504 . . . . . Revision 19
505 . . . . . Revision 36
506 . . . . . Revision 19
507 . . . . . Revision 29
508 thru 510 . . . . . Revision 19
601 thru 603 . . . . . Revision 19
604 . . . . . Revision 28
605 thru 607/(608 blank) . . . . . Revision 19
801 thru 807/(808 blank) . . . . . Revision 19

28-00-60
1 thru 3/(4 blank) . . . . . Revision 19
101 . . . . . Revision 29
102 . . . . . Revision 19
103/(104 blank) . . . . . Revision 21
201 . . . . . Revision 32
202 . . . . . Revision 39
401 thru 405 . . . . . Revision 19
406 and 407 . . . . . Revision 34
408 thru 422 . . . . . Revision 19
501 and 502 . . . . . Revision 22
503/(504 blank) . . . . . Revision 21
601 . . . . . Revision 19
602 thru 606 . . . . . Revision 31
801 thru 805/(806 blank) . . . . . Revision 19

28-25-00
1 . . . . . Revision 39
2 . . . . . Revision 20
101/(102 blank) . . . . . Revision 20
201 and 202 . . . . . Revision 20
203 thru 205/(206 blank) . . . . . Revision 19
601 and 602 . . . . . Revision 20
603 thru 605/(606 blank) . . . . . Revision 19
901 and 902 . . . . . Revision 20
903 . . . . . Revision 28
904 thru 918 . . . . . Revision 19

Chapter 32
i . . . . . Revision 19
ii thru vi . . . . . Revision 26

32-10-00
1/(2 blank) . . . . . Revision 19
301 thru 308 . . . . . Revision 19
401 and 402 . . . . . Revision 19
403 and 404 . . . . . Revision 26
405 . . . . . Revision 19
406 and 407/(408 blank) . . . . . Revision 26
601 . . . . . Revision 31
602 thru 605/(606 blank) . . . . . Revision 26
801 thru 805 . . . . . Revision 19
806 and 807/(808 blank) . . . . . Revision 26
901 thru 908 . . . . . Revision 19

32-10-60
1/(2 blank) . . . . . Revision 19
301 thru 303/(304 blank) . . . . . Revision 19
401 . . . . . Revision 19
402 . . . . . Revision 26
403 . . . . . Revision 34
404 . . . . . Revision 20
405 and 406 . . . . . Revision 19
407/(408 blank) . . . . . Revision 20
601 . . . . . Revision 31
602 . . . . . Revision 19
603/(604 blank) . . . . . Revision 22
801 thru 803/(804 blank) . . . . . Revision 19

32-40-00
201 thru 206 . . . . . Revision 19

32-40-60
201 and 202 . . . . . Revision 19

32-81-00
201 thru 204 . . . . . Revision 19
901 thru 910 . . . . . Revision 19

32-82-00
201 thru 206 . . . . . Revision 19
401 thru 407/(408 blank) . . . . . Revision 19
901 thru 912 . . . . . Revision 19

Chapter 52
i thru iv . . . . . Revision 36

52–10–00
201 thru 213 . . . . . Revision 25
214 thru 216 . . . . . Revision 36
217 . . . . . Revision 25
218 thru 224 . . . . . Revision 36
52–40–00
201 thru 205/(206 blank) . . . . . Revision 18
52–50–00
201 thru 206 . . . . . Revision 18
207 . . . . . Revision 31
208 thru 210 . . . . . Revision 18

Chapter 53

i thru vi . . . . . Revision 40
53–00–00
201 . . . . . Revision 19
202 . . . . . Revision 37
203 . . . . . Revision 19
204 . . . . . Revision 20
53–10–00
201 thru 206 . . . . . Revision 19
53–20–00
201 thru 203/(204 blank) . . . . . Revision 19
53–30–00
201 . . . . . Revision 35
202 and 203 . . . . . Revision 19
204 thru 214 . . . . . Revision 38
53–30–30
201 . . . . . Revision 26
202 thru 210 . . . . . Revision 34
53–40–00
201 thru 204 . . . . . Revision 19
53–40–30
201 . . . . . Revision 36
202 . . . . . Revision 19
203 . . . . . Revision 22
204 . . . . . Revision 19
205 thru 214 . . . . . Revision 39

53–50–10
201 and 202 . . . . . Revision 19
203 . . . . . Revision 22
204 and 205 . . . . . Revision 37
206 . . . . . Revision 40
207/(208 blank) . . . . . Revision 19
53–50–30
201 . . . . . Revision 30
202 . . . . . Revision 32
203 and 204 . . . . . Revision 33
205 thru 212 . . . . . Revision 40

Chapter 62

i thru viii . . . . . Revision 37
62–00–00
101 . . . . . Revision 20
102 . . . . . Revision 31
62–10–00
401 thru 403/(404 blank) . . . . . Revision 20
601 thru 605 . . . . . Revision 20
606 . . . . . Revision 40
607 . . . . . Revision 20
608 . . . . . Revision 33
609 . . . . . Revision 29
610 and 611 . . . . . Revision 35
612 . . . . . Revision 20
801 . . . . . Revision 33
802 thru 808 . . . . . Revision 20
809 . . . . . Revision 34
810 and 811/(812 blank) . . . . . Revision 20
62–20–00
401 . . . . . Revision 36
402 and 403 . . . . . Revision 20
404 . . . . . Revision 36
405 and 406 . . . . . Revision 20
601 and 602 . . . . . Revision 20
603 . . . . . Revision 29
604 . . . . . Revision 25
605 thru 607 . . . . . Revision 20
608 . . . . . Revision 37
609 and 610 . . . . . Revision 20
801 . . . . . Revision 20
802 . . . . . Revision 34
803 thru 810 . . . . . Revision 20
811 thru 813 . . . . . Revision 37
814 . . . . . Revision 21
815 . . . . . Revision 35
816 . . . . . Revision 34
817 and 818 . . . . . Revision 40
819 and 820 . . . . . Revision 37
62–20–60
401 . . . . . Revision 36
402 . . . . . Revision 20

403 and 404 . . . . . Revision 36
405/(406 blank) . . . . . Revision 20
601 and 602 . . . . . Revision 20
603 . . . . . Revision 33
604 . . . . . Revision 20
605 . . . . . Revision 34
606 and 607 . . . . . Revision 33
608 . . . . . Revision 20
609 . . . . . Revision 25
610 . . . . . Revision 20
801 thru 804 . . . . . Revision 20
805 thru 808 . . . . . Revision 37
809 . . . . . Revision 22
810 . . . . . Revision 37
811 . . . . . Revision 22
812 and 813 . . . . . Revision 34
814 . . . . . Revision 37

62–30–00

401 . . . . . Revision 20
402 . . . . . Revision 36
403 and 404 . . . . . Revision 31
405 . . . . . Revision 36
406 . . . . . Revision 27
407 and 408 . . . . . Revision 35
601 and 602 . . . . . Revision 32
801 thru 807/(808 blank) . . . . . Revision 20

62–30–60

401 . . . . . Revision 20
402 . . . . . Revision 27
403 . . . . . Revision 31
404 thru 406 . . . . . Revision 35
407/(408 blank) . . . . . Revision 20
601 and 602 . . . . . Revision 32
801 and 802 . . . . . Revision 20

Chapter 63

i thru x . . . . . Revision 36

63–00–00

101 . . . . . Revision 28
102 . . . . . Revision 29
103 . . . . . Revision 30
104 . . . . . Revision 28

63–10–00

401 thru 403 . . . . . Revision 20
404 . . . . . Revision 36
405 . . . . . Revision 27
406 . . . . . Revision 32
407 . . . . . Revision 20
408 . . . . . Revision 32
409 . . . . . Revision 39
410 . . . . . Revision 32
411 . . . . . Revision 34
412 thru 414 . . . . . Revision 32
601 . . . . . Revision 26
602 . . . . . Revision 20
603 . . . . . Revision 26
604 thru 606 . . . . . Revision 20
801 thru 804 . . . . . Revision 20

63–15–10

401 thru 403 . . . . . Revision 20
404 . . . . . Revision 22
405 thru 409 . . . . . Revision 20
410 . . . . . Revision 28
601 thru 603 . . . . . Revision 20
604 . . . . . Revision 37
605/(606 blank) . . . . . Revision 20
801 and 802 . . . . . Revision 20

63–15–30

201 . . . . . Revision 20
202 . . . . . Revision 36
203 thru 207/(208 blank) . . . . . Revision 20

63–20–00

201 thru 203 . . . . . Revision 20
204 and 205 . . . . . Revision 36
206 and 207/(208 blank) . . . . . Revision 20

63–20–25

201 and 202 . . . . . Revision 20
203 . . . . . Revision 41
204 . . . . . Revision 28
205 . . . . . Revision 24
206 thru 209/(210 blank) . . . . . Revision 29

63–21–00

401 and 402 . . . . . Revision 20
403 . . . . . Revision 28
404 thru 408 . . . . . Revision 20
409 . . . . . Revision 36
410 . . . . . Revision 20
411 . . . . . Revision 41
412 . . . . . Revision 37
601 . . . . . Revision 41
602 . . . . . Revision 36
603 . . . . . Revision 37
604 . . . . . Revision 36
801 and 802 . . . . . Revision 22

803 . . . . . Revision 37
804 and 805 . . . . . Revision 36
806 and 807 . . . . . Revision 37
808 and 809 . . . . . Revision 36
810 . . . . . Revision 22

63–22–00
201 thru 204 . . . . . Revision 20
401 thru 413/(414 blank) . . . . . Revision 20
601 and 602 . . . . . Revision 20
901 thru 917/(918 blank) . . . . . Revision 20

63–25–10
201 . . . . . Revision 36
202 . . . . . Revision 20
203 . . . . . Revision 40
204 thru 207/(208 blank) . . . . . Revision 20

63–25–30
201 . . . . . Revision 36
202 . . . . . Revision 20
203 . . . . . Revision 33
204 . . . . . Revision 20

63–30–00
201 and 202 . . . . . Revision 20
203 and 204 . . . . . Revision 36
205 . . . . . Revision 29
206 . . . . . Revision 36

Chapter 64
i thru iv . . . . . Revision 40

64–00–00
101 . . . . . Revision 21
102 . . . . . Revision 34

64–00–05
901 thru 908 . . . . . Revision 21

64–10–00
201 . . . . . Revision 34
202 thru 206 . . . . . Revision 21
207 . . . . . Revision 32
208 thru 210 . . . . . Revision 21
211 thru 214 . . . . . Revision 22

64–20–00
201 thru 203 . . . . . Revision 21
204 . . . . . Revision 28
205 thru 207/(208 blank) . . . . . Revision 21

64–25–30
401 thru 407 . . . . . Revision 41
408 . . . . . Revision 34
601 . . . . . Revision 34
602 . . . . . Revision 39
801 thru 804 . . . . . Revision 21
805 and 806 . . . . . Revision 40

64–30–00
201 . . . . . Revision 21
202 . . . . . Revision 36
203 and 204 . . . . . Revision 21
205 . . . . . Revision 40
206 and 207 . . . . . Revision 34
208 thru 210 . . . . . Revision 21

Chapter 67
i thru xii . . . . . Revision 39

67–00–00
101 . . . . . Revision 30
102 and 103 . . . . . Revision 21
104 . . . . . Revision 29
105 . . . . . Revision 39
106 thru 111/(112 blank) . . . . . Revision 30

67–10–00
1 thru 5/(6 blank) . . . . . Revision 21
401 thru 405 . . . . . Revision 21
406 . . . . . Revision 37
407 thru 411 . . . . . Revision 21
412 . . . . . Revision 29
413 . . . . . Revision 24
414 . . . . . Revision 21
415 thru 417 . . . . . Revision 29
418 . . . . . Revision 39
419 . . . . . Revision 21
420 . . . . . Revision 29
421 . . . . . Revision 21
422 . . . . . Revision 29
423 . . . . . Revision 31
424 . . . . . Revision 29
501 thru 503 . . . . . Revision 21
504 and 505 . . . . . Revision 34
506 . . . . . Revision 21
507 . . . . . Revision 34
508 and 509 . . . . . Revision 21
510 . . . . . Revision 24
511 . . . . . Revision 38
512 thru 515 . . . . . Revision 21
516 . . . . . Revision 36
517 thru 521 . . . . . Revision 21
522 . . . . . Revision 36
523 . . . . . Revision 29

524 . . . . . Revision 31
525 and 526 . . . . . Revision 36
527 thru 530 . . . . . Revision 21
601 . . . . . Revision 28
602 . . . . . Revision 21
603 . . . . . Revision 28
604 . . . . . Revision 39
605 . . . . . Revision 21
606 and 607 . . . . . Revision 39
608 . . . . . Revision 28
609 and 610 . . . . . Revision 39
801 thru 813 . . . . . Revision 21
814 and 815 . . . . . Revision 31
816 . . . . . Revision 21

67–10–20

201 thru 202 . . . . . Revision 21
203 . . . . . Revision 40
204 thru 208 . . . . . Revision 21

67–20–10

1 and 2 . . . . . Revision 21
401 and 402 . . . . . Revision 21
403 . . . . . Revision 34
404 . . . . . Revision 26
405 thru 407/(408 blank) . . . . . Revision 21
501 thru 504 . . . . . Revision 21
601 and 602 . . . . . Revision 21
801 thru 806 . . . . . Revision 21

67–20–30

1 . . . . . Revision 34
2 . . . . . Revision 25
401 . . . . . Revision 18
402 . . . . . Revision 34
403 . . . . . Revision 18
404 . . . . . Revision 33
405 . . . . . Revision 38
406 . . . . . Revision 34
407 . . . . . Revision 38
408 . . . . . Revision 25
409 thru 412 . . . . . Revision 33
413 . . . . . Revision 25
414 thru 416 . . . . . Revision 30
501 . . . . . Revision 33
502 . . . . . Revision 18
503 . . . . . Revision 20
504 . . . . . Revision 18
505 . . . . . Revision 30
506 . . . . . Revision 18
507 . . . . . Revision 26
508 . . . . . Revision 30
509 . . . . . Revision 37
510 and 511 . . . . . Revision 30
512 . . . . . Revision 36
513 thru 516 . . . . . Revision 30
601 . . . . . Revision 34
602 . . . . . Revision 35
603 . . . . . Revision 39
604 and 605 . . . . . Revision 24
606 . . . . . Revision 39
801 thru 803 . . . . . Revision 18
804 and 805 . . . . . Revision 30
806 . . . . . Revision 34

Chapter 71

i thru x . . . . . Revision 36

71–00–00

1/(2 blank) . . . . . Revision 22
401 thru 405 . . . . . Revision 22
406 . . . . . Revision 30
407 thru 411 . . . . . Revision 22
412 and 413/(414 blank) . . . . . Revision 26

71–00–30

1/(2 blank) . . . . . Revision 22
401 thru 404 . . . . . Revision 22
405 and 406 . . . . . Revision 34
407 thru 411 . . . . . Revision 22
412 . . . . . Revision 26

71–00–47

1 thru 3/(4 blank) . . . . . Revision 22
401 thru 406 . . . . . Revision 22
407 . . . . . Revision 36
408 thru 411/(412 blank) . . . . . Revision 29

71–10–00

201 thru 206 . . . . . Revision 22

71–10–05

201/(202 blank) . . . . . Revision 22
901 thru 904 . . . . . Revision 22

71–10–10

1 . . . . . Revision 22
2 . . . . . Revision 36
3 and 4 . . . . . Revision 22
101 thru 106 . . . . . Revision 36
201 thru 207/(208 blank) . . . . . Revision 22
401 . . . . . Revision 22
402 . . . . . Revision 37

403/(404 blank) . . . . . Revision 22
601 . . . . . Revision 39
602 and 603 . . . . . Revision 22
604 . . . . . Revision 38
801 thru 814 . . . . . Revision 22
901 thru 923/(924 blank) . . . . . Revision 22

71–10–60

1/(2 blank) . . . . . Revision 22
101/(102 blank) . . . . . Revision 22
401 . . . . . Revision 22
402 thru 404 . . . . . Revision 29
601 . . . . . Revision 29
602 . . . . . Revision 33

71–20–00

1/(2 blank) . . . . . Revision 22
401 . . . . . Revision 26
402 . . . . . Revision 22
403 and 404 . . . . . Revision 34
405/(406 blank) . . . . . Revision 22
601/(602 blank) . . . . . Revision 22
801/(802 blank) . . . . . Revision 22

71–30–00

1 and 2 . . . . . Revision 22
101 thru 103/(104 blank) . . . . . Revision 22
401 thru 412 . . . . . Revision 22
413 and 414 . . . . . Revision 26
601 and 602 . . . . . Revision 32
801 thru 804 . . . . . Revision 22
901 thru 905/(906 blank) . . . . . Revision 22

71–60–00

201 thru 205/(206 blank) . . . . . Revision 22

Chapter 75

i/(ii blank) . . . . . Revision 22

75–10–00

201 thru 203 . . . . . Revision 22
204 . . . . . Revision 37
205 and 206 . . . . . Revision 22

Chapter 76

i thru iv . . . . . Revision 37

76–00–00

1 and 2 . . . . . Revision 22
101 and 102 . . . . . Revision 22

76–10–00

201 thru 214 . . . . . Revision 22
215 . . . . . Revision 35
216 . . . . . Revision 22
217 thru 219 . . . . . Revision 35
220 and 221 . . . . . Revision 22
222 and 223 . . . . . Revision 35
224 . . . . . Revision 22

76–20–00

201 thru 213/(214 blank) . . . . . Revision 22

76–47–00

201 . . . . . Revision 22
202 and 203 . . . . . Revision 37
204 . . . . . Revision 33
205 and 206 . . . . . Revision 37
207 . . . . . Revision 22
208 thru 211 . . . . . Revision 37
212 . . . . . Revision 36

Chapter 78

i and ii . . . . . Revision 35

78–20–00

201 thru 203 . . . . . Revision 38
204 thru 209/(210 blank) . . . . . Revision 22

78–30–00

201 . . . . . Revision 38
202 thru 204 . . . . . Revision 35

Chapter 79

i and ii . . . . . Revision 23

79–00–00

201 thru 212 . . . . . Revision 23

79–10–10

201 and 202 . . . . . Revision 26
901 thru 903/(904 blank) . . . . . Revision 23

Chapter 91

i/(ii blank) . . . . . Revision 29

91–00–00

1 . . . . . Revision 21
2 . . . . . Revision 34
3 . . . . . Revision 36
4 thru 22 . . . . . Revision 41

This Page Intentionally Left Blank

Table 1. ACTIVE SERVICE BULLETINS (Cont.)

369D	369E	369F	500N	600N	SUBJECT	DATE
				013R1	Low Fuel Level Warning Light	4–15–98
	090R1	077R1	017R1	014R1	Socket Contact Assembly Inspection	9–25–98
				015	Engine Fuel Control Box Replacement	4–23–99
				016R1	Audio Warning System Replacement	9–19–00
				017	FADEC Manual Switch Guard Modification	10–6–98
				018R1	Torque Pressure Transducer High Intensity Radiated Fields (HIRF) Protection Modification	2–7–00
				019	FADEC Wire Harness Standoff Installation/Inspection	4–23–99
				020R2	Electromagnetic Compatability Test (EMC) for Optional Equipment Effects on the FADEC Control	4–14–03
				021R1	Inspection/Reidentification/Serialization of Cyclic Control Stick Sockets and Left Hand Command (Co–Pilot) Cyclic Tube	3–11–99
197	091		018		Engine Fuel Pressure Switch Replacement	2–23–99
198	092				Tail Rotor Fork Inspection, Four–Bladed	5–10–99
				022	Torque Transducer Replacement	4–23–99
				023R1	Cyclic Stick Replacement	7–30–99
				024R1	Link Assembly Replacement	4–6–99
				025	Fuel System Inspection	7–2–99
199	093		019		Turbine Outlet Temperature (TOT) Indicating System, One Time Inspection	1–11–00
				026	Turbine Outlet Temperature (TOT) Indicating System, One Time Inspection	1–11–00
			020R2	027R2	Forward and Center Thruster Control Cables, Conduit Cap Relief Area, Inspection	4–24–00
			021	028	Forward and Center Thruster Cables, Conduit Cap at Telescopic Swivel End, Inspection	11–19–99
200	094	078	022		Landing Gear Strut Inspection and Fairing Modification	4–7–00
				029	Motive Flow Restrictor Removal	1–10–01
				030R1	Inspection of Vertical Stabilizer and Torque Tube and Replacement of Attaching Hardware	5–25–01
201R2	095R2	079R2	023R2	031R2	Main Rotor Blade Torque Event Inspection	2–04–04
				032	Turbine Outlet Temperature (TOT) Indicator Replacement	12–13–01
				033	Main Rotor Drive Shaft Life Reduction	12–13–01
				034	Torque Transducer Electrical Connector One Time Inspection	12–13–01
			024	035	Fan Pitch Control Aft Tube Assembly One Time Inspection	10–23–01
				036	Tailboom Assembly Attach Fitting One Time Inspection and Repair	11–2–01
202	096	080	025	037	Main Transmission Bonding Jumper Inspection and Rework	8–14–02
				038	Exhaust Duct Inspection	5–6–03
		081			Minimum N1 Starting Speed Decal/Placard Installation	7–22–03
				039	Tailboom Attach Fittings and Upper Longerons Inspection	12–9–03
				040	Control Support Bracket Assembly Life Reduction with YSAS Installed	12–19–03
			026	041	Tailboom Assembly Overlap Inspection and Rework	11–26–03
			027	042	Forward and Center Thruster Cable Assemblies Connector One–Time Inspection	5–03–04
203R1	097R1	082R1			Tail Rotor Blade Abrasion Strip Tap Test and Modification	1–23–06
				043	Tailboom Assembly Attach Fitting One Time Inspection, Attach Fitting and Nutplate Replacement	4–13–06
				044	Lateral Mixer Oputput Link Assembly, One Time Inspection	2–16–07
	098	083	028	045	One Time Inspection of the Oil Cooler Blower, Drive Pulley Installation	3–28–07
204	099	084			Tail Rotor Blade Assembly, One Time Inspection.	4–26–07
			029	046	NOTAR ® Fan Tension–Torsion (TT) Strap Replacement	3–6–08

4. Cancelled or Superceded Service Information Notices

(1). Table 2 a list of Service Information Notices that have been cancelled or superceded.

(2). Updated information, pertinent to the Notice, has been incorporated into the appropriate manuals.

(3). If the Notice is superceded by another Notice, it will be noted in the Subject column after the description.

5. Scope

The following is an explanation of how to read Table 2.

(1). **DN**-369D Model Helicopters
EN-369E Model Helicopters
FN-369F and 369FF Model Helicopters
NN-500N Model Helicopters.

(2). **Subject** - A brief description of the Notice.

(3). **Date** - Date the Notice was cancelled or superceded.

Table 2. CANCELLED OR SUPERCEDED SERVICE INFORMATION NOTICES

369D	369E	369F	500N	600N	SUBJECT	DATE
2.3					Main Rotor Strap Pack Lamination Inspection (Superceded by DN-154)	1-15-88
4.1					Main Rotor Blade Phasing, Tracking and Balancing	8-2-93
5					600-Hour Periodic Inspection - Model 369D Cyclic Control System	8-2-93
7					Installation of 369D21008 Main Rotor Pitch Control Rod Assembly, Upper and Lower Rod End Bearings	8-2-93
15					Periodic Inspection of 369D26300 and 369D26301 Landing Gear Damper Assemblies	8-2-93
28					Field Modification of 369D29919 Main Rotor Blade Phasing Kit to new 369D29919-501 Configuration	8-2-93
29.3					Periodic Replacement of 369H5655-3 and -5 Oil Cooler Blower Fan Bearings; Inspection of Pulley Attach Hardware and Driveshaft Couplings; Inspection and Adjustment of Fan Drive Belt; Driveshaft Compression Check	8-2-93
32					New Periodic Inspection Intervals - Battery Overtemperature Warning System	8-2-93
33.1					Replacement of 369A1602 Tail Rotor Drive Fork Hinge Bolt and 369A1603 Nut; New Assembly Procedure for Tail Rotor Hub and Drive Fork Unit; Periodic Check of Flapping Hinge Bolt Preload	8-2-93
38					Daily Inspection of 369H5307 Tail Rotor Stop and 369D21724-3 Support	8-2-93
41.1					Operational Check of Engine Fuel Pump Filter Pressure (Bypass) Switch Assembly	8-2-93
	2				Inspection of Spare Main Rotor Blade Root Fitting Assemblies; Inspection of Main Rotor Hub Lead-Lag Link Assemblies (Superceded by EN-42)	11-13-87
		2			Inspection of Main Rotor Hub Lead-Lag Link Assemblies (Superceded by FN-31)	11-13-87
53.1					100-Hour Periodic Inspection of Fuel Tank Sending Unit and Fuel Low Warning Light Indicating System	8-2-93
57					Field Repair of 369D21300 Pitch Housing Assembly, Main Rotor Hub	8-2-93
61.2					Periodic Check of 369D21400-502 and M50452 Main Rotor Elastomeric Damper Assemblies	8-2-93
64					Pilot/Operator Check of 369D21210-501 Main Rotor Hub Strap Pack Assembly (Superseded by DN-154)	1-15-88
74					Un-Assigned	
75.1					Procedure for Installation of Tail Rotor Drive Shaft (Superceded by DN-95)	9-27-82

AIRWORTHINESS LIMITATIONS

Type Certificate No. H3WE

FAA Approved Airworthiness Limitations for MD Helicopters, Inc., Models 369D/E/F/FF and 500/600N.

1. General

The Airworthiness Limitations section is FAA approved and specifies maintenance required under Code of Federal Regulations (CFR), Title 14, Federal Aviation Regulation (FAR), Part 43.16 and 91.403 unless an alternative program has been FAA approved.

REVISION:	DATE	FAA SIGNATURE AND DATE
Original Issue:	October 31, 1990	Not FAA approved
Revision 1:	March 29, 1991	Not FAA approved this revision
Revision 2:	May 10, 1991	6/20/91
TR 91-001	August 12, 1991	8/14/91
Revision 3:	September 9, 1991	9/12/91
TR 91-002	November 5, 1991	11/7/91
Revision 4:	January 20, 1992	01/16/92
TR 92-004	May 20, 1992	05/27/92
Revision 5:	August 24, 1992	08/19/92
TR 92-005	November 20, 1992	11/12/92
Revision 6:	December 21, 1992	12/4/92
Revision 7:	June 1, 1993	Section 04-00-00 Not Affected This Revision
TR 93-002	May 27, 1993	5/27/93
Revision 8:	July 23, 1993	7/13/93
TR 94-001	January 21, 1994	02/09/94
Revision 9:	April 22, 1994	3-29-94 ACTING MASE.
Revision 10:	September 26, 1994	Section 04-00-00 Not Affected This Revision
TR 94-002	October 24, 1994	10/24/94

REVISION:	DATE	FAA SIGNATURE AND DATE
Revision 11:	January 18, 1995	01/23/95
Revision 12:	October 6, 1995	Section 04–00–00 Not Affected This Revision
TR 96–002:	April 24, 1996	04/24/96
Revision 13:	May 31, 1996	acting Mgr ANM 120L 6/12/96
Revision 14:	September 13, 1996	09/09/96
Revision 15:	November 15, 1996	Section 04–00–00 Not Affected This Revision
Revision 16:	January 6, 1997	Section 04–00–00 Not Affected This Revision
Revision 17:	February 24, 1997	02/20/97
TR 97–001:	July 2, 1997	07/02/97
TR 97–002:	August 19, 1997	08/19/97
Revision 18:	October 17, 1997	Section 04–00–00 Not Affected This Revision T/R 97–001 and 97–002 Previously Signed
Revision 19:	December 16, 1997	12/19/97
TR 98–001:	March 25, 1998	03/25/98
Revision 20:	June 1, 1998	Section 04–00–00 Not Affected This Revision T/R 98–001 Previously Signed
TR 98–002:	June 22, 1998	ACTING MGR. 7/10/98
TR 98–003:	3 August 1998	8/3/98
Revision 21:	24 August 1998	Section 04–00–00 Not Affected This Revision T/R 98–002 and 98–003 Previously Signed
Revision 22:	10 March 1999	Section 04–00–00 Not Affected This Revision
Revision 23:	1 June 1999	Section 04–00–00 Not Affected This Revision
Revision 24:	7 December 1999	ACTING MGR 12/30/99
Revision 25:	28 April 2000	Section 04–00–00 Not Affected This Revision
Revision 26:	17 August 2000	8/11/00
Revision 27:	9 October 2000	Section 04–00–00 Not Affected This Revision
Revision 28:	30 November 2000	Section 04–00–00 Not Affected This Revision

REVISION:	DATE	FAA SIGNATURE AND DATE
Revision 29:	11 May 2001	5/4/01 5/14/01
Revision 30:	11 July 2001	Section 04–00–00 Not Affected This Revision
TR 01–001:	10 August 2001	8/8/01
Revision 31:	5 November 2001	Section 04–00–00 Not Affected This Revision T/R 01–001 Previously Signed
TR 02–002:	30 January 2002	1/23/02
Revision 32:	18 March 2002	3/15/02
Revision 33:	24 June 2002	6/11/02
TR 03–001:	18 June 2003	6/13/03
TR 03–002:	25 June 2003	7/2/03
Revision 34:	21 August 2003	Section 04–00–00 Not Affected This Revision T/R 03–001 and 03–002 Previously Signed
TR 03–003:	30 September 2003	12/3/03
TR 03–004:	17 December 2003	1/7/04
Revision 35:	20 May 2004	Section 04–00–00 Not Affected This Revision T/R 03–003 and 03–004 Previously Signed
TR 04–001:	28 May 2004	6/7/04
Revision 36:	11 November 2004	11/3/04
Revision 37:	13 December 2005	Section 04–00–00 Not Affected This Revision
TR 05–002:	16 December 2005	12/29/05 12/29/05
Revision 38:	25 April 2006	Section 04–00–00 Not Affected This Revision T/R 05–002 Previously Signed

REVISION:	DATE	FAA SIGNATURE AND DATE
TR 06–001:	05 July 2006	7/17/06
Revision 39:	10 April 2007	Section 04–00–00 Not Affected This Revision
TR 07–001:	11 April 2007	Section 04–00–00 Not Affected This Revision
Revision 41:	03 March 2008	2/29/08

AIRWORTHINESS LIMITATIONS

2. Component Mandatory Replacement

The Airworthiness Limitation Replacement Schedule specifies the mandatory replacement time, structural inspection interval and related structural inspection procedures approved per the certificate basis of the Type Certificate Data Sheet No. H3WE and CAR 6 (6.250, 6.251) and CFR 27.571 for models 500/600N unique components only. At the listed finite-life, components or assemblies must be removed from the helicopter and permanently retired from service. At the listed inspection interval, the components or assemblies must be inspected in accordance with the Handbook of Maintenance Instructions (HMI). The title of the task and section of the HMI are referred to which provide the inspection procedures and criteria.

NOTE: Refer to CFR Part 43.10 for latest requirements for the removal, installation, storage and disposition of life-limited parts.

(1). A "life-limited" part is a physical component of the helicopter to which a maximum number of allowable operating hours or cycles are assigned. Certain assemblies and components on the helicopter have a limited life established by MDHI and approved by FAA Engineering. For example, a part with an assigned limit of 1000 hours, may accumulate 1000 hours of operation in service. Upon completion of the 1000 hours of operation, useful life of the part is ended. The finite-life assigned to different parts varies according to engineering fatigue tests, part experience, etc. The parts listed in this section must be removed from the helicopter at the finite-life indicated and identified as to it's expired life (Ref, Table 1, Note (1)).

(2). All parts not having an assigned life or stated to be of unlimited life, have a life of not less than 20,000 hours.

(3). When a life-limited part or an assembly that incorporates a life-limited part is installed on a new or used helicopter, the nomenclature, part number, serial number, component time and current helicopter hours are recorded in the Log Book and component log for the helicopter. Whether the life-limited part is new or used, the remaining number of useful life hours and previous inspection time, if applicable, for the part is added to the existing helicopter time. The total helicopter hours obtained then denotes the subsequent time at which the part must be removed from the helicopter or inspected.

(4). If a life-limited part, is part of an assembly, the assembly must be removed from the helicopter when the time expires. The assembly may be overhauled and restored to maximum number of hours of useful life by installing new life-limited parts plus all other parts specified in the overhaul instructions (Refer to Component Overhaul Manual).

(5). If interchanged between different model helicopters (for instance, Model 369D to 369FF or vice versa), any component having a limited life or overhaul schedule must be restricted to the lowest service life or TBO schedule indicated for the helicopter models and serial numbers affected.

(6). Refer to the appropriate Allison Operation and Maintenance Manual for engine component replacement requirements.

3. Component Mandatory Inspections

Some components with mandatory inspection intervals require inspections to be completed in accordance with procedures detailed in other sections of this maintenance manual. The appropriate inspection procedures are referenced in the **Notes** flagged to each component to be inspected. All maintenance manual procedures which are referenced in the FAA Approved Airworthiness Limitations Component Mandatory Replacement Schedule are FAA approved procedures which cannot be changed without FAA review and approval of the proposed changes.

4. Retirement Index Number (RIN)

(1). A Retirement Index Number (RIN) is a number that accounts for different usage spectra in assigning the retirement time for a component.

The RIN is calculated as the sum of an adjustment factor times flight hours plus another adjustment factor times Torque Events.

When a component reaches 1,000,000 RIN's, it has reached it's maximum life and is to be scrapped.

5. Torque Event (TE)

A Torque Event (TE) is defined as:

The transition to a hover from forward flight.

Any external lift operation.

NOTE: An external lift can either be on the cargo hook, external hoist or in external baskets.

For external lift operators, an external load is recorded as two (2) TE's (pick-up and drop-off).

Hover taxi with no external load will typically result in no TEs.

6. External Lift and Torque Event (TE) Requirements

The 369D/E/F/FF - 500/600N helicopters are multi-use helicopters. If the helicopter is used primarily for external lifts or training flights (high TE flights), there may be a reduction in inspection intervals of some components.

CAUTION For safe operation of the helicopter, TE's must be recorded in the Rotorcraft Log Book. Each external lift will be recorded as two (2) TE's.

(1). Determine the number of TE's and external lifts the helicopter accumulates per hour of flight time.

(2). Record all TE's in Rotorcraft Log Book and continue to record all TE's.

(3). Perform required TE inspections.

Table 1. Airworthiness Limitations Schedule

Component (1)	Model	Part Number (2)	Finite Life Hours (1)	Mandatory Inspection Hours
Main Rotor System				
Blade assembly, main rotor	369D/E (5)(6)	369D21100	3530 (37)	25 (11)(20)
		369D21100–516	3530 (37)	100 (20)
		369D21100–517	2500 (31)	25 (22)
		369D21100–517	3530 (37)	100 (20)
		369D21100–523	4000 (37)	100 (20)
		369D21120–501	3530 (37)	100 (20)
		369D21120–503	3530 (37)	100 (20)
	369F/FF (6)	369D21102	3430 (37)	25 (11)(20)
		369D21102–503	3430 (37)	100 (20)
		369D21102–517	2500 (31)	25 (22)
		369D21102–517	3430 (37)	100 (20)
		369D21102–523	4000 (37)	100 (20)
		369D21121–501	3430 (37)	100 (20)
		369D21121–503	3430 (37)	100 (20)
	500N (6)	369D21102–503	3430 (37)	100 (20)
		369D21102–517	2500 (31)	25 (22)
		369D21102–517	3430 (37)	100 (20)
		369D21102–523	4000 (37)	100 (20)
		369D21121–501	3430 (37)	100 (20)
		369D21121–503	3430 (37)	100 (20)
	600N (6)	369D21102–517 (21)	1900 (32)(37)	100 (20)
		369D21102–523	3200 (33)(37)	100 (20)
		369D21121–501	3200 (33)(37)	100 (20)
		369D21121–503	3200 (33)(37)	100 (20)
Folding pin, main rotor blade attach	369D/E/F/FF	369A1004	2850	
		369A1004–3	2850	
		369A1004–5	7600	
	500/600N	369A1004–5	7600	
Hub subassembly, main rotor	369D/E/F/FF 500N	369D21201	8900	
Pitch housing assembly, main rotor hub	369D	369D21300	9100	
		369D21300–501	9100	
	369E/F/FF 500N	369D21300–501	9100	

Table 1. Airworthiness Limitations Schedule (Cont.)

Component (1)	Model	Part Number (2)	Finite Life Hours (1)	Mandatory Inspection Hours
Retention strap assembly, main rotor hub	369D	369D21210	2770	100 (4)
		369D21210–501	2770	100 (4)
	369E/F/FF	369D21210–501	2770	100 (4)
	500/600N	369D21210–501	2770	100 (4)
Bolt – lead–lag hub, main rotor	369D	369A1220	6120	
	369D/E/F/FF 500N	369D21220	6120	
	600N	369D21220	5400 (34)	
Link assembly – lead lag hub, main rotor	369D/E	369H1203–BSC (39)	5762	25 (23)
		369H1203–21 (39)	5762	25 (23)
		369H1203–31 (39)	5762	25 (11)
		369H1203–51 (39)	11080	
		369H1203–53 (40)	11080	
		369H1203–61 (39)	11080	
	369F/FF	369H1203–21 (39)	5762	25 (23)
		369H1203–31 (39)	5762	25 (11)
		369H1203–51 (39)	11080	
		369H1203–53 (40)	11080	
		369H1203–61 (39)	11080	
	500N	369H1203–51 (39)	11080	
		369H1203–53 (40)	11080	
		369H1203–61 (39)	11080	
	600N	369H1203–51 (39)	11080	
		369H1203–53 (40)	11080	
Lead lag damper – main rotor	369D	369D21400–501	6060	
		M50452	On Cond.	(16)
	369D/E/F/FF 500/600N	369D21400–503	On Cond.	(16)
Drive shaft, main rotor	369D/E	369D25510	5020	300 (8)
	369F/FF	369D25510	3675	300 (8)
	500N	369D25510–21	3260	300 (15)
	369D/E	369F5510	(42)	
	369F/FF	369F5510	(42)	
	500N	369F5510	(42)	
	600N	600N5510	14000 (35)	
Mast assembly, main rotor	369D/E/F/FF 500N	369D22014	10450	
	600N	369D22014	3500	

Table 1. Airworthiness Limitations Schedule (Cont.)

Component (1)	Model	Part Number (2)	Finite Life Hours (1)	Mandatory Inspection Hours
Drive Shafts, Couplings and Clutches				
Drive shaft, main rotor transmission	369D/E/F	369A5510	3790	
Coupling, main transmission drive shaft	369D/E/F/FF	369H5660	4300	
	500N	369H5660	3200	
Overrunning clutch assembly	369D/E/F/FF 500/600N	369F5450–501	On Cond.	100 (24)
Sprag assembly, overrunning clutch	369D/E/F/FF	369A5364 369D25351	(3)	300 (10)
	500N	369D25351	(3)	300 (10)
	369D/E/F/FF 500/600N	369F5456	(3)	300 (17)
Drive shaft, fan	500N	500N5200	2620	
	600N	500N5200	1200 (36)	
Drive shaft, tail rotor	369D/E	369D25518	13900	
	369F/FF	369DSK152–11 369D25518–503	13900 14610	
Coupling – tail rotor drive shaft (Bendix) (**NOTE**: Not certified on 369FF Model) (9)	369D/E/F	369A5501 369H92564 (7)	4980 4980	
Anti–Torque System				
Gearshaft assembly, tail rotor input	369D/E	369D25434	12000	
	369F/FF	369D25434	3365	
Gearshaft, tail rotor output pinion	369D/E/F/FF	369D25430	7290	
Blade assembly, tail rotor	369D/E	369D21613 369D21613–11 369D21613–31 369D21613–41 369D21613–51 369D21613–61 369D21613–71 369D21640–501 (38) 369D21640–503 (38) 369D21640–505 (38) 369D21640–507 (38)	5200 5140 5140 5140 5140 5140 5140 400 5140 5140 5140	
	369F/FF	369D21606 369D21642–501 (38) 369D21642–503 (38) 369D21642–505 (38) 369D21642–507 (38)	5140 400 5140 5140 5140	

Table 1. Airworthiness Limitations Schedule (Cont.)

Component (1)	Model	Part Number (2)	Finite Life Hours (1)	Mandatory Inspection Hours
Blade assembly, tail rotor (optional 4–blade)	369D/E	369D21615	10000	
		369D21641–501 (38)	400	
		369D21641–503 (38)	10000	
		369D21641–505 (38)	10000	
		369D21641–507 (38)	10000	
Hub, tail rotor	369D/E/F/FF	369A1725	3450	
Retention strap assembly, tail rotor	369D/E/F	369A1706	5100	
	369FF	369A1706–507	5100	
		369A1706–509	5100	
Blade assembly, NOTAR fan	500N	500N5310–15	7500	
		500N5310–19	7500	
	600N	500N5310–19	12500	
Hub, fan	500N	500N5352–7	7500	
		500N5352–9	7500	
	600N	500N5352–9	7500	
Tension–Torsion Strap, NOTAR®	500N	500N5311–5	(43)(44)	
	600N			
Shaft, NOTAR fan support	600N	500N5357–13	4000	
Pitch plate assembly	500/600N	500N5363–7	7500	
Tube assembly, fan pitch	500N	500N7113–3	600 (18)	
Rotating cone assembly	500N	500N3740–1	10000	
		500N3740–41	10000	
	600N	500N3740–61	10000	
Tailboom				
Bolts, tailboom attach	369D/E/F/FF	MS21250–06014	21950	
Tailboom assembly	369D/E	369D23500	10300	
	369F/FF	369D23500–507	10300	
	500N	500N3500–19	10000	100 (14)
		500N3500–29	10000	
		500N3500–501	10000	
		500N3600–501	10000	100 (14)
	600N	600N3500–503	2500 (25)	
		600N3500–505	5900	
		600N3500–507	1000	
		600N3500–509	6000 (19)	
		600N3500–511	6000 (19)	
		600N3500–513	2500 (25)	
		600N3500–515	5900	
		600N3500–517	1000	
Empennage fittings	600N	500N3530–7/8	On Cond.	100 (26)
		500N3530–9/10	On Cond.	100 (26)

Table 1. Airworthiness Limitations Schedule (Cont.)

Component (1)	Model	Part Number (2)	Finite Life Hours (1)	Mandatory Inspection Hours
Vertical stabilizer assembly	369D/E	369D23600	12700	
	369F/FF	369D23600–505	3388	
Torque tube, horizontal stabilizer	500N	500N3950–5	5000	
	600N	500N3950–7 600N3950	3000 1000 (19)	
Horizontal stabilizer assembly	369D (12)	369D23601	7700	
	369E (12)	421–087–505 421–087–905 (13)	7700 7700	
	369F/FF (12)	421–087–503 421–087–903	7700 7700	
	600N	500N3910–25 500N3910–27	10000 (19) 10000 (19)	
Controls				
Longitudinal idler bellcrank assembly	369D	369A7301 369A7301–501	6500 6500	
	369E/F/FF	369A7301–501	6500	
	500N	369A7301–501	2870	
Idler assembly, longitudinal pitch mixer	369D/E/F/FF	369A7603	13600	
	500N	369A7603	6050	
Longitudinal control rod	500N	369A7011–13 369A7011–15	7740 7740	
Socket, cyclic stick	600N	369A7141	1000	8 (27)
Cyclic tube assembly	600N	369D27132–503	1200	8 (27)
Housing, collective stick	600N	369A7347	450	
Tube, collective pitch control	600N	369A7348	400	
Tube assembly, collective pitch (pilot)	600N	369H7354–3	600	
Socket, cyclic stick	600N	369A7802	1000	8 (27)
Tube, collective pitch (co–pilot)	600N	369A7809	1800	
Housing, collective stick	600N	369A7820	450	
Housing, collective stick	600N	369H7837	450	
Tube assembly, collective pitch (co–pilot)	600N	369H7838–3	1000	
Fuselage Sta. 75 controls support bracket	600N	369N2608–11 600N2608–9	6000 (41) Unlimited	
Airframe				
Landing gear brace	600N	600N6010–17/19	5900 (28)	
Landing gear strut	600N	600N6022–7/8	696 (29)	
Landing gear foot	600N	600N6043–3	3900 (30)	

Table 1. Airworthiness Limitations Schedule (Cont.)

Component (1)	Model	Part Number (2)	Finite Life Hours (1)	Mandatory Inspection Hours
Floats				
Squib cartridge, used on Emergency float kit 369D292473–5, –6, –9, –10, –11, –12 **NOTE:** Life is based from original date of manufacture.	369D/E/F/FF 500N	12552–1 (Holex, Inc.) 281993 (Walter Kidde) 12754–1 (Holex, Inc.) 5003527 (Tavco)	5 years 5 years 5 years 5 years	
Stabilizer support, utility float	369D/E	369D292036 369DSK66	3190 3190	

NOTES:

(1) Life–limited components interchanged between models or configurations must be restricted to the lowest service life indicated for the models or configurations affected. Life–limited components removed at retirement are to be mutilated/destroyed or conspicuously marked to prevent inadvertent return to service. Parts are applicable only on models under which a service life is listed.
Life–limited components cannot be altered or permanently marked in any manner without compromising the part integrity. Part tagging or other record keeping system is required.
Related component records must be updated each time component is removed from service.

(2) Service life shown for the basic (no dash number) part numbers apply to all dash numbered versions unless otherwise indicated.

(3) With no cargo hook attached: – No retirement life assigned (Ref. Sec. 05–10–00, Component Overhaul or Recommended Replacement Schedule).
With cargo hook attached and no separate log: – 1800 hours.
With cargo hook attached and with separate log: – 1800 hours of external load operating time when logged separately.
(For 369D/E/F/FF helicopters with 369A5364 or 369D25351 sprag assembly, Refer to AD 90–19–02.)

(4) Inspect in accordance with Main Rotor Strap Pack Lamination Inspection at 100–hour intervals, or 25–hour intervals if 2 laminates (369D/E/F/FF – 500N) or 1 laminate (600N) have failed in any one leg or tongue area of any strap assembly. A single cracked laminate between the shoes at the outboard end of a strap pack is cause for rejection of the hub assembly
369D/E/F/FF – 500N: (Ref. Sec. 62–20–00, Main Rotor Strap Pack Lamination Inspection).
600N: (Ref. Sec. 62–20–60, Main Rotor Strap Pack Lamination Inspection).
(For 369D/E/F/FF helicopters, refer to AD 89–02–01.)

(5) The 369D21100–513, –515, 516, 517 and –523 main rotor blades are not interchangeable with any earlier configuration blades (Basic, –505 or –509); however, the –505 and –509 blades are interchangeable and the –513 and –515 blades are interchangeable. The –505 and –509 configuration blades may be modified to the –513M configuration, which is fully compatible with the –513 blade. (For information concerning modification, contact MDHI Customer Service Department.)

(6) For the 369D/E helicopters, the 369D21120–501, –503 main rotor blade has all the same inspections and interchangeability as the 369D21100–517 main rotor blade.
For the 369F/FF – 500N helicopters, the 369D21121–501, –503 main rotor blade has all the same inspections and interchangeability as the 369D21102–517 main rotor blade.
For the 600N helicopters, the 369D21121–501, –503 main rotor blade has all the same inspections and interchangeability as the 369D21102–523 main rotor blade.

(7) Used with 369H90123 Rotor Brake Kit.

(8) Inspect main rotor drive shaft every 300 hours (Ref. Sec. 63–10–00, Main Rotor Drive Shaft Inspection (300 Hour)) (Reference AD 81–26–01).

(9) Failsafe device, P/N 369D25530 bolt and 369D25531 socket, must be used at both ends of tail rotor driveshaft in accordance with Tail Rotor Drive Shaft Installation with Bendix Couplings (Reference AD 86–20–07).

(10) For helicopters equipped with a cargo hook, inspect overrunning clutch sprag assembly P/N 369D25351, clutch inner race P/N 369A5353 and outer race 369A5352 every 300 hours (Ref. C.O.M., Sec. 63–10–10, Overrunning Clutch Sprag Inspection (300 Hour)). To establish time in service, either clutch total time with hook attached or a separate and permanent log of external load operating time per CFR 91.417, may be used.
(For 369D/E/F/FF helicopters with 369A5364 or 369D25351 sprag assembly, Refer to AD 90–19–02.)

(11) Inspect main rotor blade root fittings and main rotor lead–lag link assemblies every 25 hours in accordance with Main Rotor Blade Upper and Lower Root Fitting Attach Lug and Lead–Lag Link Attach Lug Inspection (25 Hour) and every 100 hours in accordance with Main Rotor Blade Upper and Lower Root, Fitting Attach Lug and Lead–Lag Link Attach Lug Inspection (100 Hour) (Ref. Sec. 62–10–00) (Reference AD 95–03–13).

(12) Tip plates, tip weights (where applicable) and attaching hardware have no retirement life and may be reused on replacement horizontal stabilizers.

(13) 421–087–903 and –905 require addition of tip plates, tip weights and attaching hardware before installation.

(14) Inspect the three upper slot bridges for cracks (Ref. Sec. 05–20–00).

(15) Inspect main rotor drive shaft every 300 hours (Ref. Sec. 63–10–00, Main Rotor Drive Shaft Inspection (300 Hour)).

(16) Inspect for deterioration every 600 hours up to a total time of 4200 hours and every 300 hours thereafter until deterioration is sufficient to retire assembly
369D/E/FF – 500N: (Ref. Sec. 62–20–00, Main Rotor Damper and Attachments Inspection)
600N: (Ref. Sec. 62–20–60, Main Rotor Damper and Attachments Inspection).

(17) For helicopters equipped with a cargo hook, inspect overrunning clutch sprag assembly P/N 369F5456, clutch inner race P/N 369F5455 and outer race 369F5453 every 300 hours. To establish time in service, either clutch total time with hook attached or a separate and permanent log of external load operating time may be used.

(18) 500N7113–11 tube assembly, fan pitch is an On–Condition part and replaces the 500N7113–3 tube assembly.

(19) Interim hours: life extension testing in progress.

(20) Inspect upper and lower blade root fittings every 100 hours in accordance with Main Rotor Blade Upper and Lower Root, Fitting Attach Lug and Lead–Lag Link Attach Lug Inspection (100 Hour) (Ref. Sec. 62–10–00)
(For 369D/E/F/FF – 500N helicopters, Reference AD 96–10–09).

(21) Main rotor blades, P/N 369D21102–517 with S/N 1976 thru 2100, 2106 thru 2115 are not to be installed on 600N helicopter (Reference Service Bulletin SB600N–007R2) (Reference AD 98–15–26).

(22) Inspect main rotor blades with 600 or more hours of operation every 25 hours of helicopter operation with a 10X magnifying glass for cracking of the lower surface of the blade emanating from the root fitting and doubler at the inboard end of the blade and to detect debonding between the blade root end fitting and doubler if missing or cracked adhesive or paint is observed. (Reference Service Bulletins SB369D–195R3, SB369E–088R3, SB369F–075R3, SB500N–015R3) (Reference AD 98–15–26).

(23) Perform Main Rotor Blade Upper and Lower Root, Fitting Attach Lug and Lead–Lag Link Attach Lug Inspection (25 Hour) up to a total time of 500 hours and every 15 hours thereafter and every 100 hours in accordance with Main Rotor Blade Upper and Lower Root Fitting, Attach Lug and Lead–Lag Link Attach Lug Inspection (100 Hour) (Ref. Sec. 62–10–00) until retirement of 369H1203–BSC and –21 Lead–Lag Link Assembly. (Reference AD 95–03–13).

(24) Inspect clutch retainer and bearing carrier for evidence of spinning and/or wear (Ref. Sec. 05–20–20).

(25) The 600N3500−503 tailboom may be reworked to a 600N3500−505 tailboom, and the 600N3500−513 tailboom may be reworked to a 600N3500−515 tailboom by modifying the attachment fittings to all−steel fittings.

(26) (Ref. Sec. 05−20−00) Using a flashlight and 10X magnifying glass, inspect horizontal stabilizer mounting brackets for cracks (pay particular attention to the forward inboard legs) (Ref. Tailboom Inspection).

(27) Sockets must be inspected for cracks every eight hours after the initial 100 hour inspection.

(28) Log all landings: Brace life is limited to 35400 logged landings or 5900 hours flight time if landing are not logged (assumed six landings per one hour of flight time).

(29) Log all landings: Strut life is limited to 4170 logged landings or 696 hours flight time if landing are not logged (assumed six landings per one hour of flight time).

(30) Log all landings: Foot life is limited to 23780 logged landings or 3900 hours flight time if landing are not logged (assumed six landings per one hour of flight time).

(31) The following main rotor blades have a finite life of 2,500 hours or 15,000 torque events*, whichever occurs first;
P/N 369D21100−517 with S/N H664, H665, H667, H669, H671, H672, H674, H676, H679, H680, H683 thru H724, H726 thru H999 and J000 thru J039, J041 thru J055 and
P/N 369D21102−517 with S/N 1976 thru 2100, 2106 thru 2115.
* TORQUE EVENT (TE) − A TE is recorded for every transition from forward flight to a hover (Reference Service Bulletins SB369D−195R3, SB369E−088R3, SB369F−075R3, SB500N−015R3).

(32) RIN = (200 x Hrs.) + (52 x TE).

(33) RIN = (160 x Hrs.) + (24 x TE).

(34) RIN = (153 x Hrs.) + (3 x TE).

(35) RIN = (50 x Hrs.) + (3 x TE).

(36) RIN = (768 x Hrs.) + (11 x TE).

(37) After accumulation of 750 flight hours and 13,720 TE, perform Main Rotor Blade Torque Event Inspection (Ref. Sec. 62−10−00) every 35 flight hours or 200 TE's (whichever occurs first).

(38) The 369D21640−501, −503, −505, −507 tail rotor blades are two−way interchangeable with the 369D21613 tail rotor blades in sets of two only.
The 369D21641−501, −503, −505, −507 tail rotor blades are two−way interchangeable with the 369D21615 tail rotor blades in sets of two only (installed on the same inboard or outboard hub).
The 369D21642−501, −503, −505, −507 tail rotor blades are two−way interchangeable with the 369D21606 tail rotor blades in sets of two only.

(39) The 369H1203−BSC, −11, −21, −31, −51 and −61 lead lag link assemblies can only be installed using the 369H1235−BSC bearing.

(40) The 369H1203−53 lead lag link assembly can only be installed using the 369H1235−1 bearing.

(41) The 369N2608−11 Control Support Bracket must be removed from 600N helicopters equipped with YSAS (Ref. SB600N−040).

(42) RIN = (29 x Hrs.) + (1 x TE).

(43) The Tension−Torsion Strap has a 5 year calendar life. This life begins the day the original package has been opened. Lord Corporation has determined that the straps can, over time, absorb moisture that can cause the straps to have decreased strength.

(44) 500N5311−5 Tension−Torsion Straps previously installed on MD900 helicopters are life limited to 2,500 hours when installed on 500N and 600N series helicopters.

Table 1. Conditional Inspections (Cont.)

Model	Requirement	Chap/Sect
ALL	If overrunning clutch assembly shows magnetism, remove engine and overrunning clutch and overhaul.	
ALL	Perform a ground run operational check on the aircraft. Functionally check the flight control system, and all avionics, electrical, lighting, communication, and navigation systems.	67 96 97
ALL	Repair any damage and replace damaged components as required.	
If lightning strike is evident on main rotor system:		
ALL	Inspect blades for damage such as burns, pitting, skin separation, etc. If damage is evident, scrap damaged blade(s).	62
ALL	Remove hub assembly and return for overhaul.	62
ALL	Inspect all bearings in the fixed and rotating control system located on the main rotor mast.	62
ALL	Remove transmission assembly and overhaul.	63
ALL	Inspect main rotor mast and drive shaft for evidence of burns.	63
ALL	Check drive shafts for residual magnetism. If magnetized or damaged, scrap drive shafts and remove engine for overhaul.	63 71
If lightning strike is evident on tail rotor system:		
369D/E/FF	Inspect blades for damage such as burns, pitting, skin separation, etc. If damage is evident, scrap damaged blade(s).	64
369D/E/FF	Overhaul tail rotor assembly.	COM
369D/E/FF	Scrap pitch change links and pitch change assembly.	64
369D/E/FF	Inspect bellcrank and control rod for any indications of arcing. Scrap parts with indications of arcing.	67
369D/E/FF	Overhaul tail rotor gearbox.	COM
369D/E/FF	Inspect tail rotor drive shaft and drive shaft damper for magnetism and/or burns.	63
369D/E/FF	Check oil cooler blower assembly, overrunning clutch and tail rotor drive shaft couplings for residual magnetism; replace as necessary.	63
369D/E/FF	Inspect oil cooler assembly for damage; replace as necessary.	63
369D/E/FF	If previous drive train items show magnetism, overhaul transmission.	COM
369D/E/FF	If overrunning clutch assembly shows magnetism, remove engine and overrunning clutch and overhaul.	71 COM
369D/E/FF	Inspect engine mounts and fitting for damage. Replace as necessary.	71
AFTER 369F5100 MAIN TRANSMISSION LUBRICATION PUMP IMPENDING BYPASS INDICATOR POPS		
ALL	Refer to Troubleshooting Power Train System	63–00–00
WHENEVER ENGINE IS REMOVED		
ALL	Remove fire blanket from above engine and inspect airframe above engine for evidence of cracks.	53

This Page Intentionally Left Blank

TABLE OF CONTENTS

Para/Figure/Table	Title	Page
20-10-00	**Torque**	**A**
	Maintenance Practices	**201**
1.	Torque Wrenches	201
2.	Application of Torque Wrench Loads	201
3.	Bearings Installation, Staking or Swaging Force	201
4.	Control Tube Jam Nut Torquing	202
5.	Standard Hardware Torque Values	202
	Table 201. Recommended Standard Torques for Tension-Type Fasteners	203
	Table 202. Recommended Standard Torques for Shear-Type Fasteners	204
	Table 203. Locking (Drag) Torque for Self-Locking Fasteners	205
20-20-00	**Cleaning**	**A**
	Maintenance Practices	**201**
1.	Cleaning	201
2.	Fuselage Interior Trim and Upholstery Cleaning	201
3.	Airframe Exterior and Rotor Blades Cleaning	201
4.	Transparent Plastic Cleaning	201
5.	Engine Compressor Contamination Removal	202
6.	Cleaning Of Engine Air Inlet Screens	202
20-30-00	**Painting**	**A**
	Maintenance Practices	**201**
1.	Paint Finish	201
2.	Paint Removal	201
3.	Paint Touchup	201
	A. Touchup - Small Sanded Areas	201
	B. Touchup - Flaking or Dried Paint or Primer	201
	C. Touchup - Primer Not Adhering to Metal Finish	201
	D. Touchup - Glass Fiber Laminate Parts	202
	E. Touchup - Polycarbonate Plastic Parts	202
	F. Touchup - ABS Thermoplastic Parts	202
4.	Main Rotor Blade Paint	203
	A. Main Rotor Blade Paint Removal	203
	B. Main Rotor Blade Paint Application	203
5.	Tail Rotor Blade Paint	204
	A. Tail Rotor Blade Paint Removal	204
	B. Tail Rotor Blade Paint Application	204
20-40-00	**Corrosion Prevention**	**A**
	Maintenance Practices	**201**
1.	Corrosion Control	201

TABLE OF CONTENTS (Cont.)

Para/Figure/Table	Title	Page
2.	Magnesium Alloys – Insulation Against Corrosion	201
3.	Sealing Compound Application	201
4.	Main Rotor Hub Corrosion Prevention (Tri-Flow Wash Procedure)	201
5.	Main Rotor Blades Corrosion Arresting	202
A.	Main Rotor Blade and Damper Attach Pins – Corrosion Prevention	202
6.	Magnesium Alloy Exterior Surface Touchup Treatment	203
7.	Aluminum Alloy Exterior Surface Touchup Treatment	203
8.	Steel Alloy Exterior Surface Touchup Treatment	203
9.	Splitter Bungee Spring Corrosion Control (500N)	204
	Table 201. Anti-Corrosion Chemical Finishes – Aluminum	204
20-90-00 Nondestructive Inspection		**A**
Maintenance Practices		**201**
1.	Nondestructive Inspection Methods	201
A.	Visual Inspection	201
	Figure 201. Visual Inspection Technique	201
B.	Dye Penetrant Inspection	202
C.	Coin Tap Inspection	202
D.	Fluorescent Penetrant Inspection	202
E.	Magnetic Particle Inspection	202
	Figure 202. Coin Tap Inspection	203
F.	Eddy Current Inspection – General	203

CAUTION Damage to main rotor drive shaft or main transmission splines can occur during installation. Care should be taken while meshing drive shaft splines into transmission output splines to prevent damage.

NOTE: The following procedure will require the assistance of another person.

(2). With assistance, slowly and evenly lift and position transmission in place.

(3). Install four washers and nuts; torque to **900 - 1100 inch-pounds (101.69 - 124.28 Nm) plus drag torque**.

(4). If transmission is new, drain any residual preservative oil. Service transmission with lubricating oil (CM125) (Ref. Sec. 12-00-00).

(5). Connect wiring to tachometer generator, two chip detectors and oil pressure switch.

(6). Install anti-torque drive shaft (Ref. Sec. 63-15-10/30).

CAUTION When reinstalling main rotor drive shaft, check that there is no gap between shaft mounting flange and rotor hub before tightening installation bolts. Gap indicates that shaft splines are not correctly meshed in transmission.

(7). If main rotor drive shaft has been removed, apply coating of preservative oil (CM121) on shaft before reinstallation and install drive shaft (Ref. Sec. 63-10-00).

(8). Connect anti-torque output shaft seal drain line and input shaft seal drain line and two hoses that attach to lubrication pump.

(9). Install cooling blower (Ref. Sec. 63-21-00).

(10). Coat input drive coupling splines with grease (CM111) and coat bolt threads with anti-seize compound (CM112) before assembly.

CAUTION When installing pulley and guard, make sure the spring pin in pulley is fully engaged inside hole in pulley guard. If the spring pin does not align correctly with hole in pully guard, the torque will be incorrect.

(11). Install pulley guard, drive pulley, shim, coupling and coupling bolt and temporarily tighten coupling bolt to approximately **250 inch-pounds (28.25 Nm)**.

NOTE: Refer to Sec. 63-10-00, Main Transmission Drive Shaft Installation and for coupling shimming, coupling torque and drive shaft installation.

(12). Install main transmission drive shaft (Ref. Sec. 63-10-00).

(13). Ground run helicopter (refer to appropriate PFM) and check drive system for excessive vibration and unusual noise. Verify absence of oil over-temperature and low pressure indications. Inspect for oil leakage.

(14). Install access covers and sound insulation.

3. Main Transmission Stripping

(Ref. Figure 202)

(1). Remove tachometer generator.

(2). Remove coupling bolt, coupling and shim from anti-torque output shaft.

(3). Remove coupling bolt, coupling, shim, drive pulley and pulley guard from main transmission input shaft.

(4). Remove input shaft seal drain connector (Ref. Sec. 12-00-00).

(5). Install suitable covers and plugs to protect all openings, including threaded holes.

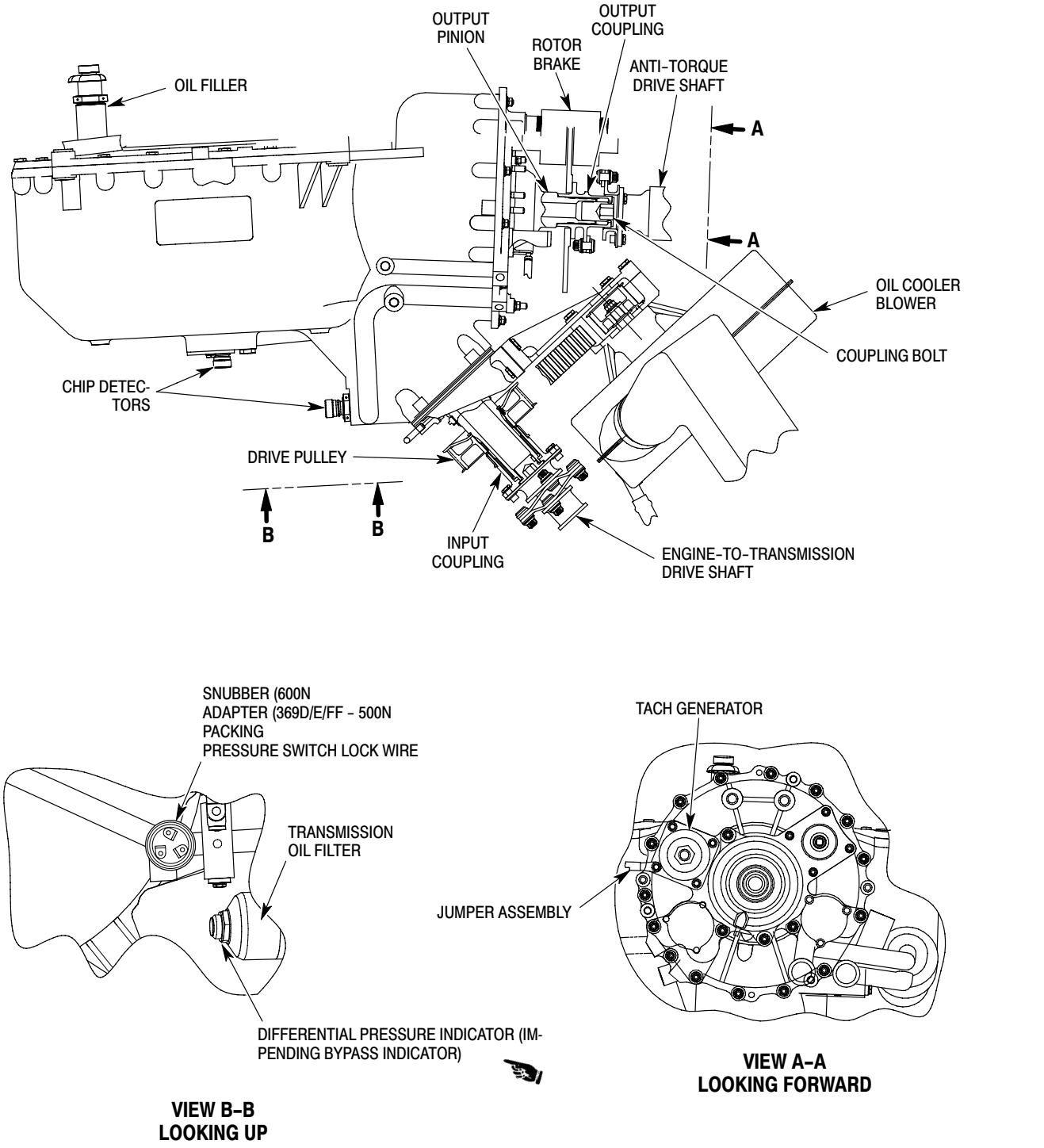

Figure 202. 369F5100 Main Transmission Build-Up

CAUTION When installing pulley and guard, make sure the spring pin in pulley is fully engaged inside hole in pulley guard. If the spring pin does not align correctly with hole in pully guard, the torque will be incorrect.

(2). Install pulley guard on main transmission input shaft.

(3). With belt looped around transmission input shaft, position mounting bracket on main transmission pad and loosely install two bolts with washers from the bottom of bracket and two bolts with washers from top of bracket.

(4). Before tightening bolts, insert two shims between bracket and transmission pad.

(5). Verify that blower scroll clears anti-torque drive shaft by a minimum of 0.190 inch (4.826 mm).

CAUTION In the following step, do not use levers or other tools on belt, or in any way force belt onto pulley.

(6). Slide driver pulley onto transmission input shaft to engage belt in teeth of both pulleys.

CAUTION

- The minimum of 0.010 inch (0.254 mm) measurement between the bolt seating surface and the input shaft must be obtained to ensure proper clamp-up. Warped shims or foreign material could provide a false 0.010 inch (0.254 mm) minimum measurement and improper clamp-up could result, which during normal operation, may damage the main transmission input shaft.
- Do not use clutch coupling shims under transmission input coupling. Inside diameter of clutch coupling shim is different than shim used on transmission input coupling. Incorrect diameters can cause an improperly seated shim, misalignment and cocked coupling.

(7). Torque bolts to **70 - 90 inch-pounds (7.91 - 10.17 Nm)**.

(8). Coat threads of coupling bolt with anti-seize compound (CM112).

(9). Lubricate input shaft splines and coupling splines with grease (CM111).

(10). Install input coupling shim and coupling on transmission input shaft with coupling bolt.

(11). Adjust belt tension (Ref. Sec. 63-21-00, Cooling Blower Belt Tension Check and Adjustment).

NOTE: Check coupling bolt for a minimum of **25 inch-pounds (2.82 Nm)** drag torque.

(12). Torque coupling bolt to **315 - 365 inch-pounds (35.59 - 41.24 Nm) plus drag torque**.

(13). Connect drain tube to cooling blower scroll fitting. Clamp tube to fitting with two turns of lockwire (CM702).

(14). Roll exhaust duct rubber connectors onto scroll outlets (transmission oil cooler duct and engine oil cooler duct) and secure with tie straps.

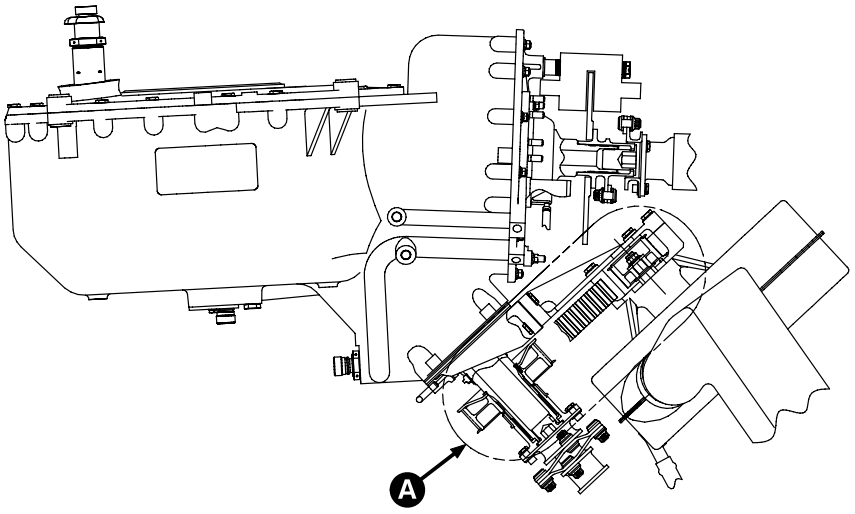

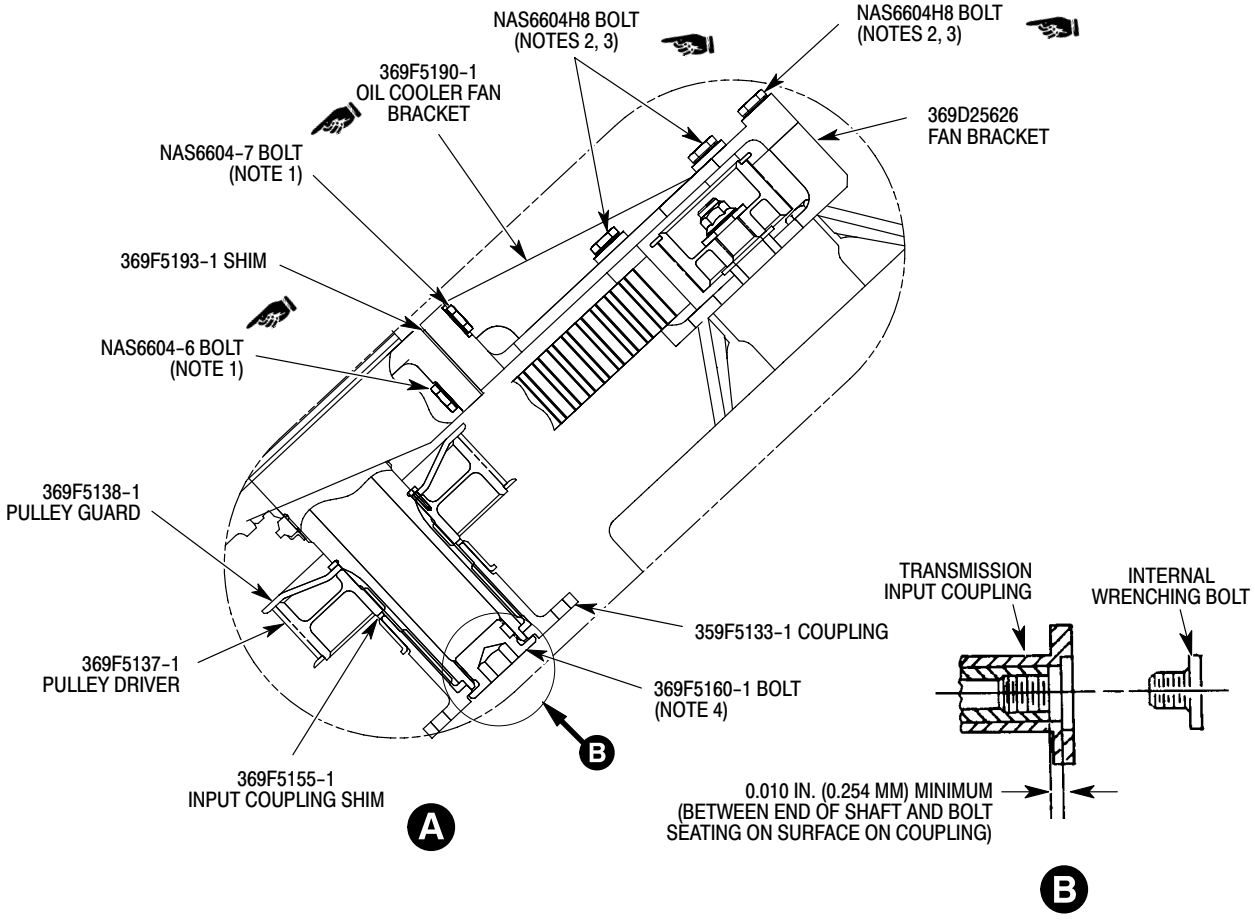

NOTES:
1. TORQUE BOLTS TO 70 - 90 INCH-POUNDS (7.91 - 10.17 NM).
2. AFTER TORQUING, SEAL BOLT HEADS WITH SEALANT (CM425).
3. TORQUE BOLTS TO 70 - 90 INCH POUNDS (7.91 - 10.17 NM) AND SAFETY WITH LOCKWIRE (CM702).
4. TORQUE COUPLING BOLT TO 315 - 365 INCH POUNDS (25.59 - 41.24 NM) PLUS DRAG TORQUE (DRAG TORQUE TO BE NOT LESS THAN 25 INCH-POUNDS (2.82 NM)).

CSP102-012C

Figure 406. Oil Cooler Blower Installation (369F5100 Transmission)

MAIN TRANSMISSION LUBRICATION AND COOLING SYSTEM INSPECTION/CHECK

1. Lubrication System Inspection

(Ref. Figure 601)

(1). Inspect plumbing and system components from oil cooler to lubrication pump for leaks, secure attachment and damage.

(2). Inspect oil cooler, lubrication pump, oil filter, oil pressure switch, liquid level plug, and chip detectors for leaks, secure attachment and damage.

(3). Inspect electrical connections at oil temperature switch, oil pressure switch, and chip detectors for absence of corrosion, secure attachment and damage.

2. Cooling Blower Inspection

(Ref. Figure 405)

(1). Remove blower access door and inspect belt for damage or excessive wear. Belt should be fully seated in pulley grooves. Limited cracking or separation of belt.

(a). Belt should be fully seated in pulley grooves.

(b). Limited cracking or separation of belt between pulley grooves is acceptable. Visually monitor any propagation. Belt should be replaced if any one separation exceeds three inches in length or if total separation exceeds 50 percent of peripheral length of belt. (For belt replacement schedule, refer to Section 05-10-00).

(2). Check belt tension.

(3). Hand-rotate main rotor to examine all visible areas of driven pulley and driver pulley for damage or excessive wear. Listen for sounds of defective bearings or of impeller touching scroll while rotor is turned.

(4). Examine scroll for cracks or breaks, and for secure attachment to hub.

(5). Examine rubber connectors at engine oil cooler duct and transmission oil cooler duct where they attach to scroll. Examine ducts for damage.

(6). Look through hub support legs and, to extent possible, inspect impeller for damage. A crack, loose rivet or distorted vane is cause for impeller replacement. Inspect mount screws and bolts for evidence of broken slippage mark paint.

(7). Examine scroll drain tube for damage, secure attachment and clear passage.

(8). Examine mounting bracket and fan mounting bracket for secure attachment. Check for broken lockwire at bolt heads securing mounting bracket cooling blower assembly.

3. Cooling Blower Inspection (Disassembled)

Consumable Materials (Ref. Section 91-00-00)

Item	Nomenclature
CM206	Chemical coating
CM318	Primer
CM801	Abrasive paper, silicon carbide

(1). Examine belt for damage or excessive wear (Ref. Figure 405).

(2). Examine driver pulley, spring pin, pulley guard and driven pulley for damage or excessive wear.

(3). Check driven pulley retaining nut for a minimum of **160 inch-pounds (18.08 Nm) plus drag torque**. If loss of torque is indicated, remove pulley nut and inspect washer for evidence of elongation and wear.

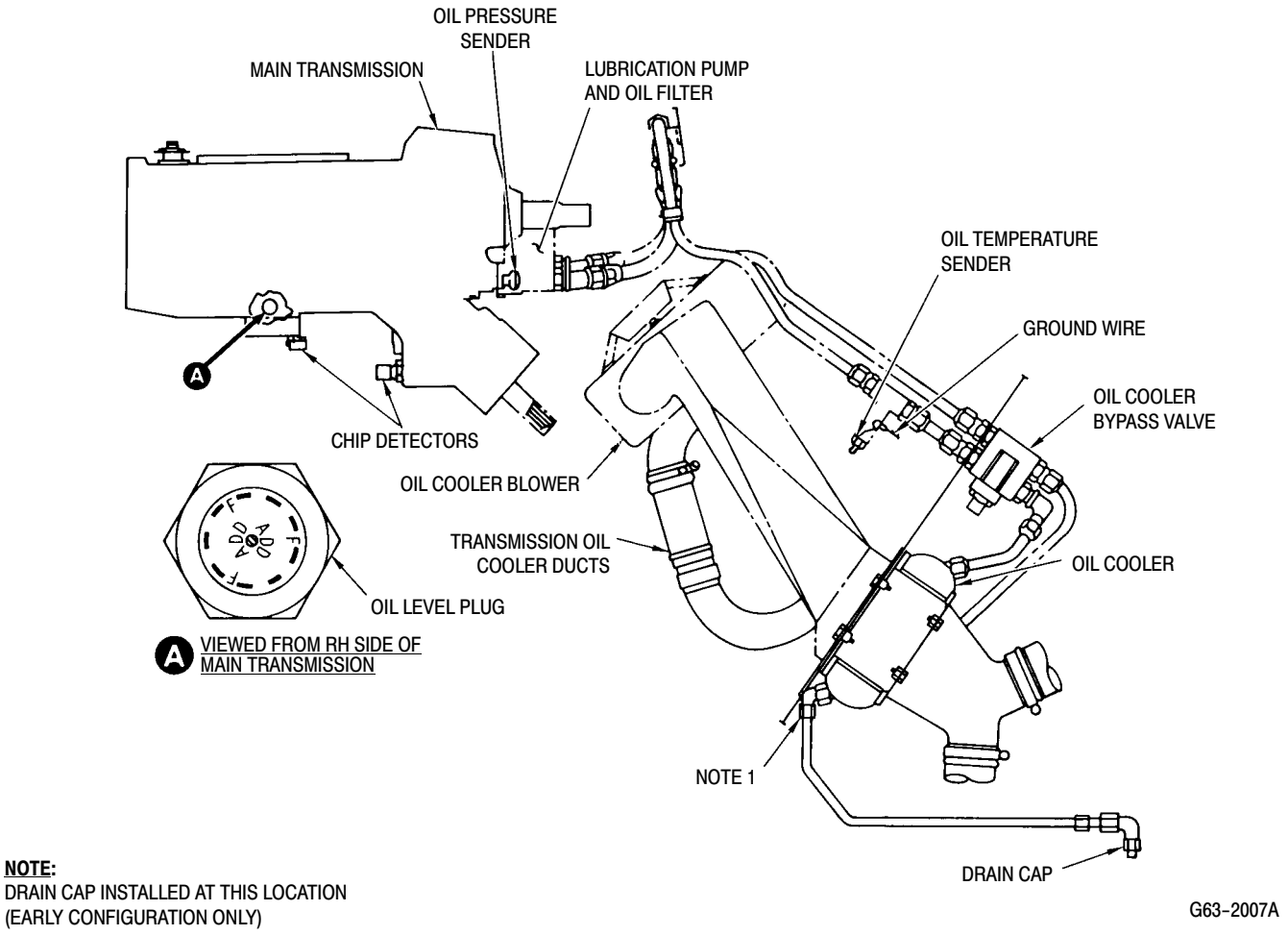

Figure 601. Main Transmission Cooling Blower and Duct

(4). Check pulley shaft and splines for condition. Replace damaged flat washer or ring washer with flat washer. Install and torque nut to **160 - 190 inch-pounds (18.08 - 21.47 Nm) plus drag torque**.

(5). Examine mounting bracket and fan mounting bracket for cracks and breaks.

(6). Examine web of mounting bracket for wear.

(a). Remove nicks, scratches or grooves leaving sharp impressions in web. Minimum acceptable web thickness: 0.125 inch (3.175 mm).

(b). Replace mounting bracket if web does not meet 0.125 inch (3.175 mm) minimum after repair.

(7). Examine scroll (Ref. Figure 801) for cracks, breaks and distortion.

CAUTION Handle impeller carefully to prevent damage that could cause imbalance and require replacement of impeller.

(8). Visually (minimum 10X magnification) examine impeller (Ref. Figure 801) for cracks, deformation and separation.

(a). Look for foreign material attached to impeller. None is permitted.

(b). Check for loose rivets at hub.

(c). Use electroprobe or gage of equivalent accuracy to measure depth of scratches or nicks.

(d). Use penetrating dye to examine suspected cracks.

ANTI–TORQUE FAN REMOVAL/INSTALLATION

1. Anti–Torque Fan Assembly

The purpose of the fan is to provide anti–torque control using a variable flow of air, across variable pitch blades, down the tailboom. The anti–torque fan liner, felt metal seal, provides a controlled gap between the fan and the felt metal seal for optimum efficiency of the fan during flight.

NOTE: The NOTAR® anti–torque control system must be re–rigged immediately after replacement of any component, control rods, or linkages, and if helicopter operation reveals a rigging deficiency.

2. Anti–Torque Fan Replacement

(Ref. Figure 401 and Figure 402)

Special Tools (Ref. Section 91–00–00)

Item	Nomenclature
ST605	Fan nut socket

A. Anti–Torque Fan Removal

(1). Remove tailboom (Ref. Sec. 53–40–30).

(2). Remove nut and lock washer from aft tube assembly.

(3). Remove fan pitch control tube (Ref. Sec. 67–20–30, Fan Pitch Control Tube Removal).

(4). Remove six bolts, washers and pitch control housing from fan.

(5). Remove lock washer from nut and shaft by releasing the holding tangs from lock nut and pull locking ring from support shaft knurl.

(6). Remove locknut in a counter–clockwise direction, using coupling socket (ST605) and coupling holding fixture tool.

(7). Remove washer from shaft.

(8). Remove fan from helicopter.

B. Anti–Torque Fan Installation

Consumable Materials (Ref. Section 91–00–00)

Item	Nomenclature
CM702	Lockwire CRES

(1). Align and install fan assembly on support shaft.

(2). Install washer on shaft.

(3). Install locknut and torque nut to **40 - 42 foot-pounds (54 - 57 Nm)**. Install lock washer.

(4). Install pitch bearing housing using six bolts and washers, Torque bolts to **80 - 100 inch-pounds (9.04 - 11.30 Nm) and lockwire** (CM702).

(5). Install fan pitch control tube (Ref. Sec. 67–20–30, Fan Pitch Control Tube Installation).

(6). Install tailboom (Ref. Sec. 53–40–30).

3. Anti–Torque Fan Blade Replacement

(Ref. Figure 401)

NOTE: When a blade needs replacement for any reason, whether it be service related or at overhaul, replace associated bolt, washer, and nut.

A. Anti–Torque Fan Blade Removal

(1). Remove anti–torque fan from helicopter (Ref. Anti–Torque Fan Removal).

(2). Remove fan blade from strap assembly by removing cotter pin, washer and pin.

B. Anti–Torque Fan Blade Installation

(1). Install fan blade and align retention hole with upper strap assembly retention hole.

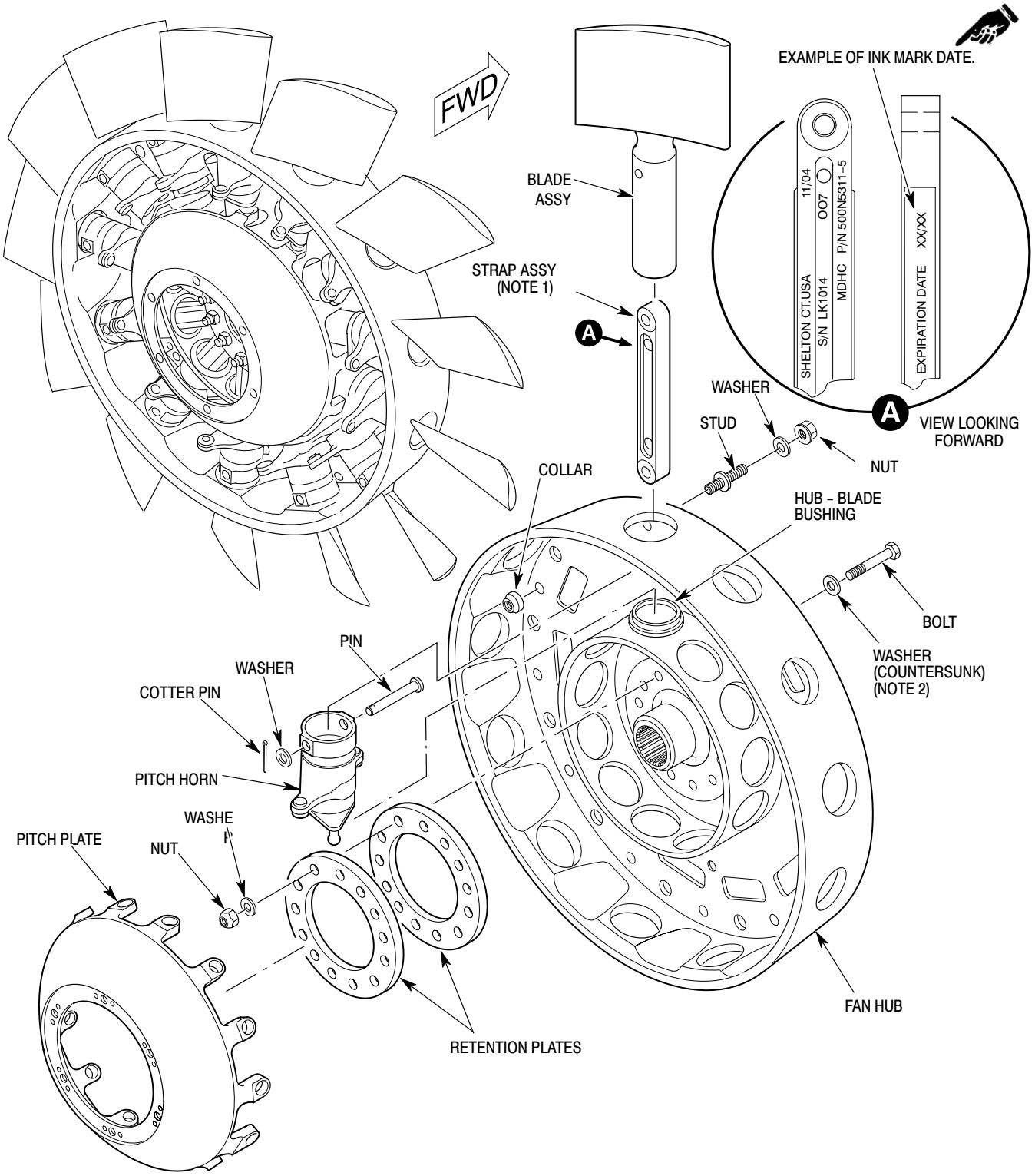

NOTE:

1. INSTALL STRAP WITH SERIAL NUMBER FACING AFT DIRECTION.
2. INSTALL WASHER WITH COUNTERSINK AGAINST BOLT-HEAD.

G64-2005B

Figure 401. Anti-Torque Fan

(2). Install pin, washer and cotter pin.

(3). Reinstall anti-torque fan in helicopter (Ref. Anti-Torque Fan Installation).

(4). Perform fan balance check (Ref. Sec. 18-20-30, Fan Balance Check).

Consumable Materials
(Ref. Section 91-00-00)

Item	Nomenclature
CM312	Ink stamp, permanent

4. Fan Blade Strap and Pitch Horn Replacement

(Ref. Figure 401) Remove and install the pitch horn and strap assembly using the following procedures.

NOTE:

- The following procedure covers the individual removal of one strap assembly and pitch horn. If disassembly of all is required, use the following steps for each one requiring removal.
- When strap is replaced, replace related bolt, washer, and nut.

A. Fan Blade Strap and Pitch Horn Disassembly

(1). Remove anti-torque fan from helicopter (Ref. Anti-Torque Fan Removal).

(2). Remove fan blade(s) (Ref. Anti-Torque Fan Blade Replacement).

(3). Remove bolt and washer retaining bottom half of strap assembly between two retention plates.

(4). Remove strap assembly thru top hole of fan hub.

(5). Remove pitch horn from fan hub.

B. Fan Blade Strap and Pitch Horn Reassembly

NOTE: Counterweights on pitch arms are set by the factory; do not attempt to adjust.

(1). Install pitch horn in fan assembly. Ensure ball on lower side of pitch horn is inserted in bushing of pitch plate.

NOTE: Inspect strap assembly for condition and expiration date. Pay particular attention to area around the two spools. Inspect for cracks in the polyurethane coating. If any cuts or breaks are found that exceed 0.020 inch (0.508 mm) in depth or 0.25 inch (6.35 mm) in length, replace the strap.

- Tension-torsion straps have a life limit that starts when their package is opened.
- Tension-torsion straps can be put back in their package, and life limit not started, if no out of the package more than five days.

(2). If tension-torsion strap is removed from package for no more than five days, do the steps that follow:

(a). Replace desiccant in package, use desiccant (CM826).

NOTE: If you can not seal package; put, tension-torsion strap, package, and desiccant (CM826) in new plastic bag.

(b). Put tension-torsion strap in package and seal package opening with tape.

(c). Put package in box and seal box with tape.

(3). If replacement strap is new, remove from package and write the words **EXPIRATION DATE** on the strap face and date five years after the package is opened. Use permanent ink (CM312).

(4). Make an item component record card for each tension-torsion strap.

NOTE: Install tension-torsion straps so that the cure date is in view when fan is assembled.

(5). Insert strap assembly thru top of fan hub and pitch horn until lower (smaller diameter) hole is aligned between holes of two retention plates.

(6). Install blade and align spar before torquing inboard nut, this ensures proper alignment of strap with blade.

(7). Install new bolt, washers (countersunk washer against bolt-head), and nut thru holes of retention plates and of strap assembly.

(8). Install fan blade(s) and torque bolts to **100 inch-pounds (11.30 Nm)** (Ref. Anti-Torque Fan Blade Installation).

(9). Reinstall anti-torque fan in helicopter (Ref. Anti-Torque Fan Replacement).

(10). Perform fan balance (Ref. Sec. 18-20-30, Fan Balance Check).

5. Retention Plate and Pitch Plate Replacement

(Ref. Figure 401) Remove and install the retention strap and pitch plate using the following procedures.

A. Retention Plate and Pitch Plate Disassembly

(1). Remove anti-torque fan from helicopter (Ref. Anti-Torque Fan Removal).

(2). Remove fan blades (Ref. Anti-Torque Fan Blade Replacement).

(3). Remove strap assemblies and pitch horns.

(4). Remove pitch plate and retention plates from fan hub.

B. Retention Plate and Pitch Plate Reassembly

(1). Position retention plates in fan hub.

NOTE: Install tension-torsion straps so that the cure date is in view when fan is assembled.

(2). Install pitch horn and strap assemblies (Ref. Strap and Pitch Horn Reassembly).

(3). Place pitch plate over retention plates within fan hub.

(4). Install fan blades (Ref. Anti-Torque Fan Blade Installation).

(5). Reinstall anti-torque fan in helicopter (Ref. Anti-Torque Fan Installation).

6. Support Shaft Replacement

(Ref. Figure 402) Remove and install the support shaft using the following procedures.

NOTE: When replacing pitch plate and/or support shaft bearings, do not use 900R bearings in the 500/600N helicopters.

A. Support Shaft Disassembly

(1). Remove anti-torque fan from helicopter (Ref. Anti-Torque Fan Removal).

(2). Remove fan pitch control tube (Ref. Sec. 67-20-30).

(3). Remove fan interconnect driveshaft (Ref. Sec. 63-15-30).

(4). Remove fan interconnect shaft coupling from support shaft (Ref. Sec. 63-15-30).

(5). Remove support shaft and fan hub housing from fan support assembly by removing four cotter pins, nuts, washers and bolts.

(6). Remove hub spacer from shaft.

(7). Remove bearing retainer from support housing.

(8). Press shaft and fan support bearing out of support housing.

NOTE: Removal of bearing seal at disassembly is not required unless seals need replacement.

(9). Remove bearing seal from support housing and bearing retainer.

(10). Press bearing off support shaft using removal ring.

B. Support Shaft Reassembly

Consumable Materials
(Ref. Section 91-00-00)

Item	Nomenclature
CM111	Grease, aircraft
CM425	Sealing compound

(1). Install removal ring on support shaft until firmly seated against shoulder of support shaft.

(2). Install support bearing on support shaft.

(3). Install bearing seal in support housing and bearing retainer using sealant (CM425).

(4). Fill seal cavity with 3.3-4.0 CCs of grease (CM111).

(5). Install support bearing and shaft in support housing.

(6). Install bearing retainer and align bolt holes on support housing.

(7). Install hub spacer on shaft.

(8). Install support shaft and housing on fan support assembly. using four bolts, washers, and nuts. Torque nuts to **40 - 50 inch-pounds (4.52 - 5.65 Nm)**. Install cotter keys.

(9). Install fan interconnect shaft coupling on support shaft (Ref. Sec. 63-15-30).

(10). Install fan interconnect driveshaft (Ref. Sec. 63-15-30).

(11). Install fan pitch control tube (Ref. Sec. 67-20-30).

(12). Install anti-torque fan on helicopter (Ref. Anti-Torque Fan Installation).

(13). Check fan balance (Ref Sec. 18-00-30, Fan Balance Check).

7. Fan Balance Stud Replacement

A. Fan Balance Stud Removal

The following procedure is for removal of the balance studs when the lock collars have become loose and allow the stud to rotate.

(1). Removal with Pneumatic Tool: Pneumatic tools may be used only on fasteners in interference fit holes and fasteners with aluminum collars.

(a). Select the applicable removal tool. Fit removal tool to a 0.375 inch (9.525 mm) square socket drive that will fit a reversible screwdriver motor.

(b). Place the collar removal tool over the collar and press firmly.

(c). Rotate the tool counterclockwise by hand until the teeth bite into the collar.

(d). Place the motor on the drive socket and unscrew the collar using reverse drive.

(e). Tap out the pin with a nonmetallic-faced mallet.

(2). Removal with Hand Tool:

(a). Insert the applicable size hex wrench into the pin wrenching cavity and hold securely to prevent pin rotation.

(b). Rotate the collar counterclockwise with pliers or vise grips to remove.

(c). Tap out pin with a nonmetallic-faced mallet.

B. Fan Balance Stud Installation

Pins may be reused, provided the finish has not been marred and the threads and wrenching cavity are in acceptable condition.

Consumable Materials
(Ref. Section 91-00-00)

Item	Nomenclature
CM409	Adhesive, epoxy

(1). Apply adhesive (CM409) to pin and insert, while wet, using a nonmetallic-faced mallet or rivet set into hole. Ensure Pin is seated flush against fan hub.

(2). Manually screw the collar onto the pin a minimum of two threads.

(3). Installation with Pneumatic Tool:

(a). Insert the hex wrench tip of the power driver into the wrenching cavity in the pin

(b). Press the power driver socket firmly against the collar and actuate the driver until the collar wrenching device is torqued off.

(c). Withdraw the hex wrench tip from the wrenching cavity and discard the wrenching collar.

(4). Installation with hand tool:

(a). Press socket from hand tool firmly onto collar.

(b). Insert hex wrench though center of tool and hold pin to prevent it from rotating.

(c). Turn socket clockwise, while holding hex wrench, until collar is firmly seated against fan hub; wrenching collar will torque off when proper torque is reached. Discard wrenching collar.

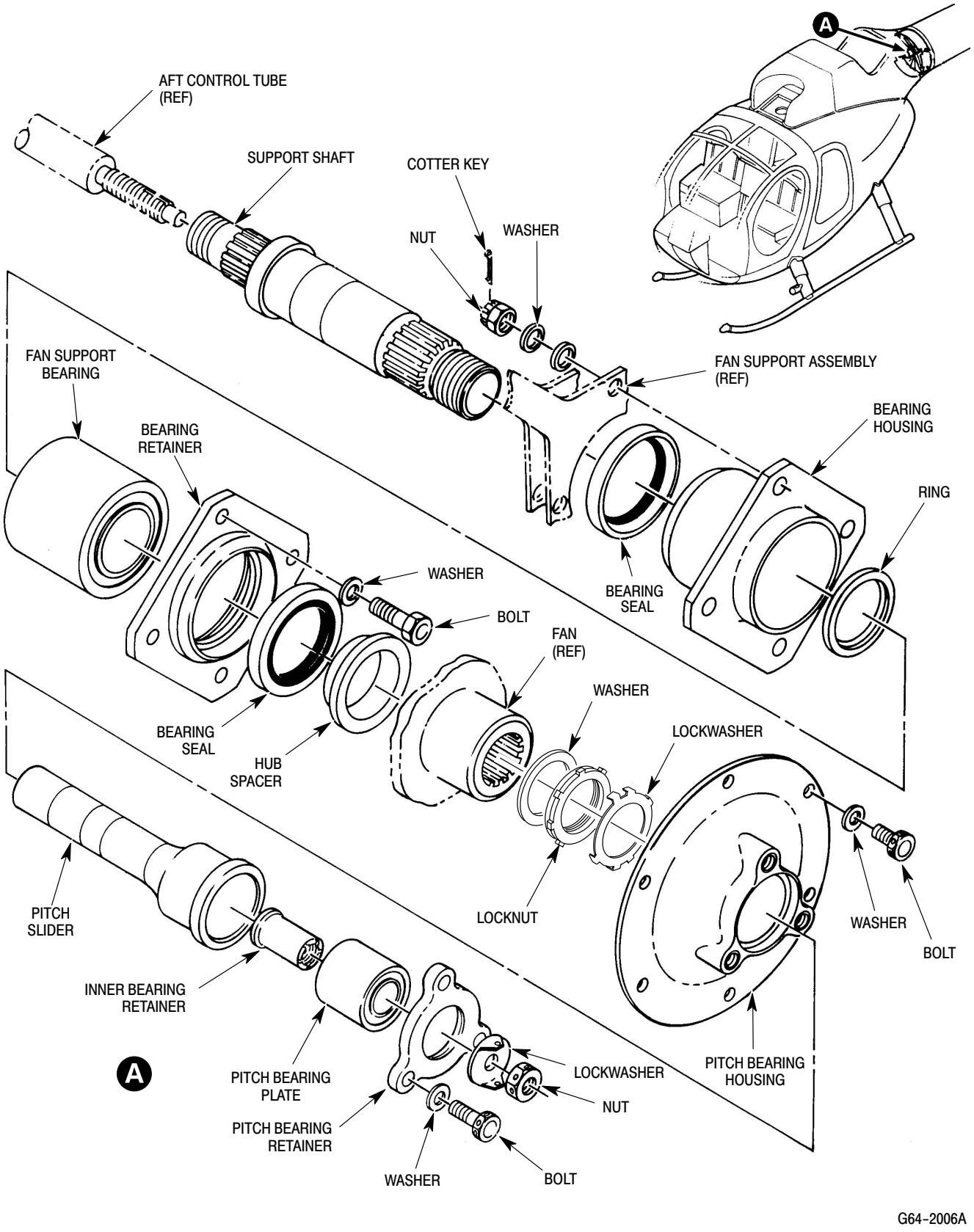

Figure 402. Anti-Torque Fan Support Shaft

8. Pitch Horn Counterweight Set Screw Replacement

(Ref. Figure 403) If, during fan inspection, a counterweight is found to be loose, the set screw must be replaced.

Consumable Materials
(Ref. Section 91-00-00)

Item	Nomenclature
CM216	Loctite remover
CM321	Surface primer locking compound

(1). Apply heat to loose counterweight.

(2). Remove and discard set screw.

(3). Remove retaining ring and washer.

(4). Inspect threads in counterweight for condition and cleanliness.

(5). Clean pitch horn threads with Loctite remover (CM216).

(6). Apply grade T primer (CM321) to threads of new set screw; allow to dry for 30 minutes at ambient temperature.

NOTE: Ensure counterweight-to-pitch horn index mark aligns correctly. All counterweights are indexed the same.

(7). Align index mark on counterweight to match with mark on pitch horn and install into pitch horn.

(8). Apply grade B locking compound (CM321) to threads of set screw and install into pitch horn. Tighten set screw.

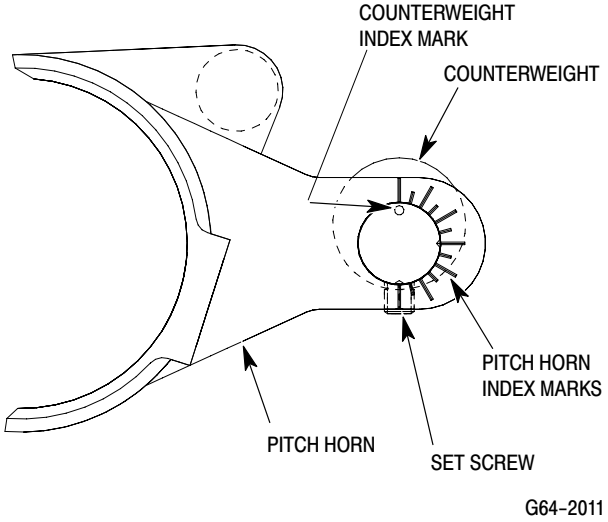

Figure 403. Pitch Horn Counterweight Set Screw Replacement

This Page Intentionally Left Blank

Table 1. Consumable Materials (Cont.)

Item No.	Material	Specification No. (1) Type Class Grade	Commercial Name/No. (2)	Vendor (Table 2)
CM126	Oil, turbine (4) (5)	MIL-L (PRF)-23699		(3)
CM127	Grease, YSAS Actuator		168043	MS90
	Solvents, Cleaners and Corrosion Preventative Compounds			
CM201	Protective coating	MIL-C (PRF)-6799 1		(3)
CM202	Metal protector, aerosol		Molykote	MS22
CM203	Potting compound	MIL-S (PRF)-8516G		MS77
CM204	Compound, corrosion preventative	MIL-C (PRF)-16173E 3 4	Braycote	MS10 MS13 MS88
CM205	Dielectric compound		DC-4	MS22
CM206	Chemical coating	MIL-C-5541	Iridite 14-2 Al-Coat Alodine 1201	MS67 MS85
CM207	Chromic acid solution (pH 2.6 to 3.4, magnesium touchup)		Dow #19 or equivalent	MS22
CM208	Barrier material (grease-proof)	MIL-B (PRF)-121G 1 . . . . . 2 . . . . . A MIL-B (PRF)-131L 1		(3)
CM209	Putty, general purpose	MIL-P (PRF)-8116	Compound 3998	MS32
CM210	Corrosive preventive (aircraft gas turbine, synthetic base)	MIL-C (PRF)-8188		(3)
CM211	Solvent		3339	MS82
CM212	Releasing agent		TC7-527	MS26
CM213	Releasing agent		225	MS64
CM214	Releasing agent	MIL-P (PRF)-23377 HMS 20-1245		MS14 MS17
CM215	Parting agent		Slip-Spray Fre-Kote 33	MS24 MS31
CM216	Loctite remover (for disassembled parts)		Oakite 156	MS17 MS57 MS74
CM217	Isopropyl alcohol	TT-I-735		(3)
CM218	Alcohol, denatured	O-E-760 1		(3)
CM219	Methyl-ethyl-ketone	TT-M-261		(3)
CM220	Naphtha aliphatic	TT-N-95 2		(3)
CM221	Xylene			(3)
CM222	1,1,1-Trichloroethane	O-T-620		(3)
CM223	Acetone	O-A-51		(3)

Table 1. Consumable Materials (Cont.)

Item No.	Material	Specification No. (1) Type Class Grade	Commercial Name/No. (2)	Vendor (Table 2)
CM224	Soap paste	P-S-560		(3)
CM225	Detergent, general purpose	MIL-O-16791		(3)
CM226	Cleaning compound, alkaline waterbase	MIL-C-25769		(3)
CM227	Washing compound with wax		Turtle™ Zip Wax	(3)
CM228	Surface cleaner (pre-paint solution with phosphoric acid base)	TT-C-490 MIL-C-10578 2	WO#1	MS79
CM229	Paint remover (acid-type for epoxy)	TT-R-25134		MS79
CM230	Paint remover (solvent-type)	MIL-R-25314		(3)
CM231	Plastic bead, spherical 20 - 30 mesh		Poly Plus 20/30 (8)	MS1 MS2 MS61
CM232	Rust inhibitor spray		WD-40	MS68
CM233	Rust inhibitor spray		LPS3	MS46
CM234	Solvent, dry-cleaning		P-D-680	(3)
CM235	Cleaner		Desoclean 45	MS17
	Paints (9), Primers and Coating Compounds			
CM301	Pre-treatment	MIL-P-15328		(3)
CM302	Epoxy primer / Catalyst reducer		1-1G-69 / 1-1H-75	MS3
CM303	Wash primer	MIL-C-8514		(3)
CM304	Enamel, epoxy (Fed-Std-595)	MDM 15-1100 2	Black #37038 White #37769 Tan #20318 Parchment #20371 Red #11958 Green #34151 Gray #36231 Yellow #13655	(3)
CM305	Lacquer, acrylic (Fed-Std-595)	MDM 15-1083	Black #17038 Black #37038 Parchment #20371 Green #34151 Blue #15102 Blue #35044 Brown #30140	(3)
CM306	Lacquer, clear (aluminum clad alloy surfaces)	MIL-L-6066		(3)
CM307	Lacquer, acrylic semi-gloss	HMS 15-1083		(3)
CM308	Lacquer, blue	FED-STD-15102		(3)
CM309	Lacquer, green	TT-L-32		(3)

Table 1. Consumable Materials (Cont.)

Item No.	Material	Specification No. (1) Type Class Grade	Commercial Name/No. (2)	Vendor (Table 2)
CM310	Enamel, lusterless	TT-E-527		(3)
CM311	Coating, logo white / Thinner		Q-881 (Color No. 484) / T-80695	(3)
CM312	Ink stamp, permanent	MIL-M-43719 TT-I-558		(3)
	Ink, marking, stencil	A-A-208 Type 1, color number 37038		(3)
	Fine tip permanent marker		Sharpie™	(3)
CM313	Insulation varnish		Glyptal 1201	MS33
CM314	Varnish, moisture resistant	MIL-V-173 2		(3)
CM315	Adhesive primer (liquid primer)	HMS 16-1069 1		MS50
CM316	Epoxy coating / Thinner		Poly-EP	MS19
CM317	Resin primer / Thinner (paint base for polycarbonate plastic)		Q-881 / T-80679	MS11
CM318	Primer	MIL-P-85582 1 . . . . . C2		(3)
CM319	Barrier material, grease-proof	MIL-B-121 1 . . . . . 2 . . . . . A MIL-B-131 1		(3)
CM320	Thinner, lacquer (acrylin-nitrocellulose)	MIL-T-19544	Prepsol (DuPont 3919)	MS24
CM321	Surface primer locking compound (single component, grade as noted)	MIL-S-22473	Locquic	MS45
CM322	Primer, Silicone, Red		Dow Corning 1200	MS43
CM323	Primer	MIL-P-23377 1 C		(3)
	Adhesives, Cements and Sealants			
CM401	Adhesive		Stabond G-304	MS75
CM402	Adhesive	MDM 16-1068 11	EA9323 EA956	MS21
CM403	Adhesive		Epon 919	MS72
CM404	Adhesive, epoxy (non-structural)	HMS 16-1147 2	EC2216B/A Scotch Weld	MS86
CM405	Adhesive	HMS 16-1149	C-111	MS75
CM406	Adhesive		U-136 (AC-AAAA)	MS75

Table 1. Consumable Materials (Cont.)

Item No.	Material	Specification No. (1) Type Class Grade	Commercial Name/No. (2)	Vendor (Table 2)
CM407	Adhesive / Primer / Catalyst		A-4000 / A-4004 / xy22	MS22
CM408	Adhesive, silicone rubber		Silastic 140	MS22
CM409	Adhesive, epoxy	MDM 16-1068 1	EA9330.3	MS21
CM410	Adhesive, epoxy	MDM 16-1068 7	EA9309.3	MS21
CM411	Adhesive, epoxy (non-structural)	MIL-A-52194 MDM 16-1068 2	Scotch-Weld EC1838 A1177B	MS86 MS12
CM412	Adhesive, bonding, vulcanized (synthetic rubber-to-steel)	MIL-A-1154		MS86
CM413	Not used at this time			
CM414	Adhesive, cyanoacrylic / Accelerator	MIL-A-46050	3CI-1000 / Super Drop Accelerator	MS21
CM415	Cement	MIL-A-8576B	PS-18 S147	MS69
CM416	Cement		#2210	MS86
CM417	Cement	HMS 16-1149 2 1	Grip	MS38
CM418	Cement, epoxy	HMS 16-1149 2 2	EC1300L	MS86
CM419	Sealer	MDM 16-1068 2	A1177B	MS12
CM420	Sealant	MIL-S-81733	PR-1431 Type IV PR1436G Type II PR1436GB-2	MS62
CM421	Sealant		Anchor Weld #220	MS58
CM422	Sealant		#5220	MS30
CM423	Sealant		RTV106 **(2)**	MS34
CM424	Sealing compound		HT-4	MS75
CM425	Sealing compound (fuel resistant)	HMS 16-1097 1 . . . . . B2 MIL-S-8802	Pro-Seal 890	MS62
CM426	Sealing compound	MIL-S-8516 2	3C-3007	MS14
CM427	Sealing compound	MIL-S-8516 1 . . . . . 2 . . . . . A1/2	PR1422	MS62
CM428	Sealing compound	MIL-S-8516 1 2	RTV730 Silastic 730	MS22 MS34
CM429	Sealing compound, silicone		RTV11	MS34

Table 1. Consumable Materials (Cont.)

Item No.	Material	Specification No. (1) Type Class Grade	Commercial Name/No. (2)	Vendor (Table 2)
CM430	Sealant, solvent resistant	MIL-S-8660B	RTV732 Silastic 732 RTV 157	MS22 MS34
CM431	Sealing, locking and retaining compound (single component, grade as noted)	MIL-S-22473 MIL-R-46082	Loctite #85 or RC/609	MS45 MS60
CM432	Dichloromethane (methylene chloride)	MIL-D-6998		(3)
CM433	Ethylene chloride (ethylene dichloride, EDC)	MIL-E-10662		(3)
CM434	Thread sealant		P412	MS60
CM435	Tetrahydrofuran (THF)			MS51
CM436	Plastic steel		Devcon A	MS20
CM437	Sealing compound		Permabond 102 Loctite 414	MS43 MS60 MS45 MS87
CM438	Adhesive, Epoxy	HMS16-1068 12	EA9321	MS21
CM439	Adhesive	HMS16-1149 5		MS75
CM440	Sealant, electrically conductive	MDM16-1261	Cho-bond 2165	MS91
	Composite Materials			
CM501	Fiberglass cloth (0.022, 2 ply)	SAE-AMS-C-9084 No. 181		(3)
CM502	Sleeving, fiberglass (No. 4, 0.214 in. ID x 4.0 in.)	MIL-I-3190 . . . . . HA-1		(3)
CM503	Fiberglass repair kit		Cordokit RK-10	MS29
CM504	Epoxy resin with catalyst (low pressure laminating)	MIL-R-9300 1		(3)
CM505	Polyester laminating resin	MIL-R-7575		(3)
CM506	Resin, fiberglass		Epon 828	MS72
CM507	Resin, filler		Epon 960F	MS72
CM508	Resin, filler		#RP1257-3	MS66
	Rubber Material			
CM601	Insulation sleeving, electrical (vinyl tubing; size as notes)	MIL-I-631 F . . . . . 1 . . . . . A Form U, Category 1		(3)
CM602	Insulation sleeving, electrical, fiberglass (size as notes)	MIL-I-3190		(3)

Table 1. Consumable Materials (Cont.)

Item No.	Material	Specification No. (1) Type Class Grade	Commercial Name/No. (2)	Vendor (Table 2)
CM603	Patching material (inside/outside)		#5200/5187/5194	MS82
CM604	Patching material (outside only)		#5218 or #5241/5241	MS82
CM605	Fuel cell repair kit		RK3CL	MS82
CM606	Rubber cement	MIL-A-5092		(3)
CM607	Cement	MIL-S-9117	EC-678	MS82
CM608	Cement		Uniroyal #3230	MS80
CM609	Repair kit (non-self- sealing cell)		Uniroyal #RK-10-34	MS80
CM610	Patch material (self- sealing cell, exterior)		Uniroyal #5241/5241 sandwich	MS80
CM611	Tubing, vinyl clear		PVC tubing, 2 GA, clear 105C	MS71
CM612	Tube, silicone		No. 4 (H.A.I.)	MS83
CM613	Sleeve, vinyl		No. 2 Resinite	MS13
CM614	Sleeving, heat-shrink (class, type or diameter as noted)	MIL-I-23053	RNF100X3/8 RNF100X1/2 RNF100 .125 ID	MS65
	Lockwire, Fasteners and Tape			
CM701	Lockwire CRES	MS20995C20		(3)
CM702	Lockwire CRES	MS20995C32		(3)
CM703	Tie strap (size as noted)	MS3367-*-*		MS78
CM704	Tie strap, nylon	MS17821-1-9	TY-RAP	(3)
CM705	Tie, cable		SST2	MS18
CM706	Tie strap base		TC112	MS78
CM707	Tape, fastener (nylon hook and pile)		Velcro	(3)
CM708	Tape		#850	MS86
CM709	Tape		CT93C	MS42
CM710	Tape, high temperature (thickness as noted)		Temp-R	MS16 MS39
CM711	Tape, pressure sensitive (waterproof for packaging and sealing, width and thickness as noted)	PPP-T-60 1 1		MS60 MS86
CM712	Tape, pressure sensitive (width as noted)		#41	MS86
CM713	Tape, pressure sensitive		#471	MS86
CM714	Tape, pressure sensitive (width as noted)		#4104	MS86
CM715	Tape, pressure sensitive (width as noted)		#4508	MS86

Table 1. Consumable Materials (Cont.)

Item No.	Material	Specification No. (1) Type Class Grade	Commercial Name/No. (2)	Vendor (Table 2)
CM716	Tape, pressure sensitive (adhesive, filament reinforced)	PPP-T-97		(3)
CM717	Tape, pressure sensitive, (polyurethane, width as noted)		#Y8560	MS86
CM718	Tape, double-faced		E-706	MS8
CM719	Tape, vinyl plastic		#330	MS76
CM720	Tape and activator, vinyl		Scotch Cal #45 Scotch Tite A-2	MS86
CM721	Tape, aluminum foil		#425	MS86
CM722	Tape, polyethylene		#483	MS86
CM723	Tape, nitrile rubber		NE-71-A	MS7
CM724	Tape, non-slip (pressure sensitive, medium grade, black)	P-D-00455		(3)
CM725	Tape, electrical, plastic	MIL-I-7798	#33	MS86
CM726	Tape teflon		#520 #48	MS60 MS86
CM727	Tape, foam (adhesive backing)		4104Y 92772	MS86
CM728	Tape, pressure sensitive (sponge rubber)		4504 Scotchfoam tape	MS86
CM729	Tape, masking, pressure sensitive	UU-T-106	#216 (High Temp)	MS86
CM730	Tape, duct			(3)
CM731	Lockwire CRES	MS20995C15		(3)
	Miscellaneous Materials			
CM801	Abrasive paper, silicon carbide (grade as noted)	P-P-101		(3)
CM802	Abrasive cloth, aluminum oxide (grade as noted)	P-C-451		(3)
CM803	Crocus cloth	P-C-458		(3)
CM804	Emery cloth, fine			(3)
CM805	Dye penetrant kit	MIL-I-25135		MS6 MS48
CM806	Micro-Mesh plastic restoration kit	5350-01-290-4002	Micro-Mesh Kit KR-70	MS52
CM807	Twine, nylon	MIL-T-713		(3)
CM808	Lacing cord (high temperature)	Type T-3333		MS84
CM809	Nylon cord (lacing)	MIL-C-5040		(3)
CM810	Leak detector, liquid	MIL-L-25567C	Leak-Tec	MS4
CM811	Leak detector, liquid		Snoop	MS56
CM812	Splice, knife		32445	MS5

Table 1. Consumable Materials (Cont.)

Item No.	Material	Specification No. (1) Type Class Grade	Commercial Name/No. (2)	Vendor (Table 2)
CM813	Wire	MS22759/34-22-9		(3)
CM814	Dykem, red or blue		DX-296	MS23 MS40 MS49
CM815	Solder (tin alloy, rosin core)	QQ-S-571 SN60WRP2		(3)
CM816	Solder (tin alloy, acid core)	QQ-S-571		(3)
CM817	Brazing flux (paste)	O-F-499		(3)
CM818	Brazing alloy (silver base)			MS86
CM819	Kimwipe			(3)
CM820	Cheesecloth			(3)
CM821	Gasket material (adhesive one side only)		Scotchfoam #4304	MS86
CM822	Acetylene, technical grade	BB-A-106		(3)
CM823	Oxygen, industrial grade	BB-O-925 1 . . . . . B		(3)
CM824	Welding rod (corrosion and heat resistant alloys, class or type as noted)	AMS 5656, AWS A5.9, ER219	21-6-9 (Nitronic 40)	(3)
CM825	Welding rod	QQ-R-566 CLFS RA12 or RA143 (04043) 5% silicon		(3)
CM826	Desiccant	MIL-D-3464 Type I or II	Desiccant	(3)

NOTES:

(1) Numbers are U.S. Specifications and Standards. Prefix symbols are specified as follows:
AMS – American Materials Standards;
MS – Military Standards;
MIL – Military Specification; Single, Double or Triple alpha prefix of the same letter – Federal Specification;
AN – Air Force/Navy Aeronautical Standard;
NAS – National Aerospace Standard.

(2) Primary selection. All equivalent material can be used as a different selection. Time increments on manufacturers instructions must be adhered to, unless given differently in a specific task.

(3) Use the best comparable grade material when conformity of available materials of same type with given Specification Number cannot be found.

(4) Oils approved for use in 500/600N Series Helicopter main and fan transmission are synthetic compounds having Ryder Gear Value in excess of 2500 pounds.

(5) For Model 250 Series engine oil change requirements and restrictions on mixing oils, refer to Allison Operation and Maintenance Manual.
CAUTION: Mixing of oils within an oil series not in the same group is permitted only in an emergency. Use of mixed oils (oils not in the same group) in an engine is limited to five hours total running time. Adequate maintenance records must be maintained to ensure that the five hour limit is not exceeded. Mixing of oils from different series is not permitted.

(6) Mobil oil SHC 626 can be formulated such that it may have two different colors. The oil can still be mixed with no adverse affects.

(7) Use only Mobil SHC 626 oil in the 369F5450 overrunning clutch and 369F5100 main transmission.

(8) Do not use over 50 psig air pressure for abrasive cleaning method. Mask or shield threaded areas or critical surfaces where damage may result from abrasive blasting.

(9) When ordering paint, give each paint by type (i.e. acrylic, epoxy, polyurethane); by color and AC part number. Also include compatible HS or federal standard (FED–STD) number to make sure correct type and color paint is supplied. The color code numbers for finish paints used on 500/600N Series Helicopters are entered in helicopter log books before delivery of aircraft. When ordering paints, ensure AC Number and SA Number are compatible.

Table 2. Manufacturer/Supplier Number

Number	Name
MS1	Abrasive Cleaning Equipment 20122 State Rd. Cerritos, CA 92701
MS2	Abrasives Unlimited 4653 S. 33rd St. Phoenix, AZ 85040 (602) 276–0077
MS3	Advanced Coating and Chemicals 2213 N. Tyler S. El Monte, CA 91733
MS4	American Gas and Chemical Co. 220A Pegasus Ave. Northvale, NJ 07647 1904 (201) 767–7300 (800) 526–1008
MS5	AMP Co. P.O. Box 55 Winston Salem, NC 27102 (336) 725–9222 (800) 522–6752
MS6	Ardrox Inc. 19 Woodburn Ave. P.O. Box 814 St. Catherines, Ontario Canada L2R 6Y3 (416) 684–1800
MS7	Armstrong Cork Co. Lancaster, PA 17604
MS8	Arno Adhesive Tapes Inc. Los Angeles, CA
MS9	Arthur Withrow 5511 District Blvd. Los Angeles, CA 90040
MS10	Tectyl Industrial Products A Div. Of Ashland Inc. 3499 Dabney Dr. Lexington, KY 40509 (859) 357–7534
MS11	Bee Chemical Co. 2700–T E. 170th St. Lansing, IL 60438 (708) 474–7000
MS12	B.F. Goodrich Co. 500 S. Main St. Akron, OH 44318
MS13	Castrol Industrial North America Inc. 1001– W. 31st St. Downers Grove, IL 60515 (630) 241–4000 (800) 621–2661
MS14	Churchill Chemical Corp. Los Angeles, CA
MS15	PRC–Desoto International, Inc. 5454 San Fernando Rd. Glendale, CA 91203 (818) 240 2060
MS16	Connecticut Hard Rubber Co. New Haven, CT
MS17	Crown Metro Inc P.O. Box 5857 Greenville, SC 29606 (864) 299–1331
MS18	Danquit Corp. Tinley Park, IL

Number	Name
MS19	Detroit Graphite Co. Detroit, MI
MS20	Devcon 30 Endicott St. Danvers, MA 01923 (978) 777–1100
MS21	Dexter Adhesive & Coating Systems 2850 Willow Pass Rd., P.O. Box 312 Bay Point, CA 94565–0031 (925) 458–8000 (800) 424–9300
MS22	Dow Corning Corporation P.O. Box 0994, South Saginaw Road Midland, MI 48686 (800) 634–9660
MS23	ITW/Dykem 805 E. Old 56 Hwy. Olathe, KS 6606 (800) 443–9536
MS24	Du Pont Wilmington, DE 19898 (302) 774–1000 (800) 441–7515
MS25	E/M Corp. 100–T Cooper Circle Peachtree City, GA 30269 (770) 261–4800
MS26	EPD Industries 2055 E. 223 St. Long Beach, CA 90810
MS27	Everlube Corp. North Hollywood, CA
MS28	Exxon Co. P.O. Box 2380 Houston, TX 77001
MS29	Ferro Corp. Composites Division 34 Smith St. Norwalk, CT 06852
MS30	Fiber–Resin Corp 170 W Providencia Ave Burbank, CA 91502 (800) 624–9487
MS31	Fre–Kote Inc.

Number	Name
MS32	Fuller O'Brien Co. S. San Francisco, CA
MS33	General Electric Insulation Dept. Schenectady, NY
MS34	General Electric Company Silicone Products Business Division 260 Hudson River Rd. Waterford, NY 12188 (518) 233–3330
MS35	GC Electronics Los Angeles, CA
MS36	Harry Miller Corp. 4th & Bristol Sts. Philadelphia, PA 19140 (215) 324–4000
MS37	IKS American Corp. Szumoto Seiko Division 1555 W. Rosecrans Ave. Gardena, CA 90249 (800) 421–2761
MS38	Columbia Aluminum Products 7020 E. Slauson Ave. Commerce, California 90040 (323) 728–7361
MS39	Insulectro Co. 1410 W. Olympic Blvd. Los Angeles, CA
MS40	Irwin–Hobson Co. Ninth and S.E. Woodward Portland, OR 97202
MS41	Deleted – Not used at this time.
MS42	Jones Industrial Supply Culver City, CA
MS43	K.R. Anderson 4316 E. University Dr. Phoenix, AZ 85034 (602) 437–0030
MS44	Not used at this time
MS45	Loctite Inc. 1001 Trout Brook Crossing Rocky Hill, CT 06067–3910 Phone: (860) 571–5100 FAX: (860) 571–5465

Number	Name
MS46	LPS Laboratories Inc. 4647 Hugh Howell Rd., Dept. M Tucker, GA 30084 (800) 241–8334
MS47	Lubriplate Div., Fiske Bros. Refining Co. 129–T Lockwood St. Newark, NJ 07105 (973) 589–9150
MS48	Magna Flux 11898–T Burnside Lane Roscoe, IL 61073 (815) 623–7634
MS49	Markall Products Co. 4772–T W. 139 St. Cleveland, OH 44135 (216) 267–3235
MS50	MD Helicopters Inc. 4555 E. McDowell Mesa, AZ 85215–9734 (480) 346–6377 (800) 388–3378
MS51	McKesson and Robbins Chemical Dept. Los Angeles, CA
MS52	Micro–Surface Finishing Products Inc. 1217 W. Third Street P.O. Box 818 Wilton, IA 52778 (319) 732–3240
MS53	Miller–Stevenson Chemical Co. 1001 E. first St. Los Angeles, CA
MS54	Mobil Oil Corp. International Aviation Division 150 E. 42nd St. New York, NY 10017
MS55	Rohm and Haas Company 100 Independence Mall West Philadelphia, PA 19106–2399 (215) 592–3000 (215) 592–3377
MS56	Nupro Company 4800 East 345th Street Willoughby, OH 44094 4460 (440) 951–7100

Number	Name
MS57	Chemetall Oakite Products, Inc. 50 Valley Rd. Berkeley Heights, NJ 07922 2712 (908) 464–6900
MS58	Pacific Upholstery Gardena, CA
MS59	Parker–Hannifin 711 Taylor Street P.O. Box 4032 Elyria, OH 44036 (440) 284–6300
MS60	Permabond International Corp. 480 S. Dean St. Englewood, NJ 07631 (201) 567–9494
MS61	Polyrock Co. 4763 Murrita Ave. Chino, CA 91710
MS62	Product Research and Chemical Co. 5426 San Fernando Rd. Glendale, CA 91209
MS63	Product Techniques, Inc. 511 East 8th Pl. Los Angeles, CA
MS64	Ram Chemical Co. Gardena, CA
MS65	Raychem Corp. 305 Constitution Dr., Mailstop 103/2A Menlo Park, CA 94025–1164 (800) 926–2425 (650) 361–3860
MS66	Ren Plastics Inc. Lansing, MI 48910
MS67	Richardson Company Allied–Kelite Products Division 2400 E. Devon Ave. Des Plains, IL
MS68	Rocket Chemical Co. Inc. San Diego, CA
MS69	Rohm and Haas Company 100 Independence Mall West Philadelphia, PA 19106–2399 (215) 592–3000 (215) 592–3377
MS70	Royal Lubricants, Inc. 215 Merry Lane, P.O. Box 518 East Hanover, NJ 07936 0518 (800) 989–7692

Number	Name
MS71	Sea Wire and Cable Inc. P.O. Box 647 Madison, AL 35758 1–800–633–7210
MS72	Shell Chemical Co. 910 Louisiana St. Houston, TX 77002 713–241–6161
MS73	Shell Oil Company 50 W. 50th. St. New York, NY 10020
MS74	Sherwin Williams
MS75	Stabond Corp. 14010–T S. Western Ave. Gardena, CA 90249 (310) 380–6168
MS76	Technical Tape Co. 363 Woodycrest Ave. Nashville, TN 37210 (800) 714–8806
MS77	Thiokol
MS78	Thomas and Betts Co. Elizabeth, NJ
MS79	Turco Products, Inc Division of Atochem North America 2700 Temple Ave Suite B Long Beach, CA 90806 (562) 981–8307
MS80	Uniroyal Inc. Engineered Systems Dept. Mishawaka, IN 46544
MS81	United–Erie Incorporated 438 Huron St. Erie, PA 16502 (800) 377–7561
MS82	U.S. Rubber Co. Fuel Container Dept. Mishawaka, IN

Number	Name
MS83	Varflex Corp. 512 W. Court St. Rome, NY 13440 (315) 336–4400
MS84	Warren Wire Co.
MS85	Witco Allied–Kelite Division 29111 Milford Rd. New Hudson, MI 48165 (313) 437–8161
MS86	3M Co. Bldg. 223–N 3M Center St. Paul, MN 55144–1000 (612) 733–1110 (800) 362–3550
MS87	R.S, Hughes 2107 E. Magnolia Phoenix, AZ 85034 (602) 275–5565 (602) 275–5025
MS88	Esgard Corrosion Coatings, PO Drawer 2698, Lafayette, LA 70502 (800) 888–2511
MS89	Hernon Mfg., Inc. 121–T Tech Dr. Sanford, FL 32771 USA (800) 527–0004 (407) 322–4000
MS90	Astronautics Corporation of America 4115 N. Teutonia Ave. Milwaukee, WI, 53209 www.astronautics.com Tel: (414) 449–4000 Fax: (414) 447–8231
MS91	Chomerics, Inc. 77 Dragon Court Woburn, MA 01801 (781) 935–4850

Table 3. Special Tools

Item No.	Part No.	Nomenclature	Function	Vendor (Table 4)
		Ground Handling		
ST101	369A9905	Ground handling wheels (369D/E/FF can be used on 500N)	Ground handling of helicopter.	TS21
	BDW-500M	Mechanical Ground Handling Wheels (500N)		
	BDW-500H	Hydraulic Ground Handling Wheels (500N)		
	BDW-600M	Mechanical Ground Handling Wheels (600N)		
	BDW-MDH	Hydraulic Ground Handling Wheels (600N)		
ST102	369H9801	Handle-jack assembly, ground handling (straight) (369D/E/FF - 500N)	Raising or lowering helicopter with ground handling wheels.	
ST103	369A9906	Handle-jack assembly, ground handling (offset) (369D/E/FF - 500N)	Raising or lowering helicopter with ground handling wheels when additional clearance is required.	
ST104	369H90126	Ground handling wheels (one side)	Ground handling of helicopter equipped with utility or emergency floats.	
ST105	HT-500	Tow bar (369D/E/FF, can be used on 500N)	Towing of helicopter.	TS21
	HT-500P	Tow bar (500N/600N)		
		Jacking and Leveling		
ST201	369D29904 600N9904	Hoisting adapter (5-bladed) (6-bladed)	Hoisting entire helicopter or removing main rotor.	
ST202	369A2010-5	Jack fittings	Jacking, leveling or tiedown of helicopter.	
ST203	02-0520-0100	Hydraulic jack: 1-5 ton (900-4500 kg)	Jacking and leveling at Sta. 90.61.	
ST204	02-0234-0100	Hydraulic jack: 80-inch (203 cm) leg	Jacking and leveling at Sta. 197.78.	TS15
ST205	KS 5490 old KS 5549 new	Inclinometer	Angle of incidence tool, flight control rigging.	TS9
ST206	36-D-2844	Prop protractor	Measure angle of incident.	
		Main Transmission		
ST301	369H9807	Main transmission drain hose	Drain main transmission oil.	

Table 3. Special Tools (Cont.)

Item No.	Part No.	Nomenclature	Function	Vendor (Table 4)
		Engine		
ST401	369A9948 369D28602-80903-1	Engine stand (250-C20B / 250-C20R/2) (250-C30 / 250-C47)	Engine support and transport dolly.	
ST402	369A8009 369D29905 369DSK410	Engine hoist (250-C20B) (250-C20R/2) (250-C30 / 250-C47)	Engine removal and installation.	
ST403	369H92537 369H92537-501	Engine compressor wash kit (369D/E - 500N) (369FF - 600N)	Clean engine compressor.	
ST404	6798292	Wrench, ground idle adjusting	Bendix fuel control idle speed adjustment.	
ST405	369H9925	Rigging fixture, collective stick	Gas producer rigging.	
ST406	369A7368-80901	Alignment fixture	Gas producer rigging.	
ST407	MS17990-315	Rigging pin	Gas producer rigging.	
ST408	#1741145	Test tool	Oil filter bypass indicator test.	TS6
		Flight Controls		
ST501	369H9925 369H9925-3	Collective rigging fixture (LH command) (369D/E/FF - 500N) (600N)	Rigging of main rotor collective controls.	
ST502	369A9927	Collective rigging fixture (RH command)	Rigging of main rotor collective controls.	
ST503	369A9930	Mixer rigging plate	Rigging of main rotor collective and cyclic controls.	
ST504	369D29929-9 600N9929-5	Longitudinal rigging fixture (LH command) (369D/E/FF - 500N) (600N)	Rigging of main rotor cyclic controls.	
ST505	369A9929-5 369D29929-5	Longitudinal rigging fixture (RH command) (369D/E/FF - 500N) (600N)	Rigging of main rotor cyclic controls.	
ST506	369A9928-9 369A9928-19	Lateral rigging fixture (LH command) (369D/E/FF - 500N) (600N)	Rigging of main rotor cyclic controls.	
ST507	369A9928-5	Lateral rigging fixture (RH command)	Rigging of main rotor cyclic controls.	

Table 3. Special Tools (Cont.)

Item No.	Part No.	Nomenclature	Function	Vendor (Table 4)
ST508	369D29936 369A7300-ATP-1	Collective bungee installation tool (369D/E/FF - 500N) (600N)	Remove bungee installation tool. Dismantle bungee assembly.	
ST509	Not used at this time			
ST510	369D29985	Bungee spring compression tool rod and channel (369D/E/FF - 500N)	Compress collective bungee.	
ST511	369D29910-32501	Test fixture	Shop aid for rigging main rotor controls.	
		Anti-Torque		
ST601	500N9901-3	Rigging pin	Rigging of NOTAR® anti-torque flight controls.	
ST602	830006-809-00653	Spring tension removal tool	Removal of anti-torque bungee spring & splitter spring.	
ST603	500N5365-1-ATP1	Tip seal cutter	Anti-torque tip seal felt metal cutting tool.	
ST604	500N9505-1	Coupling socket	Fan & gearbox coupling socket.	
ST605	500N9506-1	Fan nut socket	Anti-torque fan removal.	
ST606	369D29931 369D29907	T/R swashplate rigging tool (2-bladed tail rotor) (4-bladed tail rotor)	Rig tail rotor controls.	
ST607	369D29823 369D29826	Adapter, torque wrench (2-bladed tail rotor) (4-bladed tail rotor)	Install tail rotor nut.	
ST608	369D29822-3	Pitch control assembly holding block	Secure tail rotor swashplate block to remove/install nut.	
ST609	369D29822-5	Adapter, torque wrench	Remove/install tail rotor swashplate housing bearing nut.	
ST610	369A1600-80902	Bushing wrench	Install and torque tail rotor hub threaded bushing.	
ST611	83006-809-00090-1	Arbor press fixture, 369A7951-5 bearing	Install tail rotor pitch control link bearings.	
ST612	83006-809-00090-15	Staking tool, 369A7951-5 bearing	Stake tail rotor pitch control link bearings.	
ST613	269A9232	Plug, bearing removal	Remove tail rotor pitch control housing bearings.	
ST614	500N5364-ATP1	Regreasing tool, fan bearing	Regreasing of the 500N5364 and 500N7120 fan bearings.	

Table 3. Special Tools (Cont.)

Item No.	Part No.	Nomenclature	Function	Vendor (Table 4)
		Main Rotor		
ST701	369A9829	Main rotor wrench assembly	Loosening/torquing of main rotor mast nut.	
ST702	369D29932 600N9932	Hub puller (369D/E/FF - 500N) (600N)	Separate main rotor hub from mast.	
ST703	369A9933 *369A9933-5	Main rotor hub driver	Seat main rotor hub.	
ST704	369D29957 old FRDH101 new	Adapter, torque wrench	Install main rotor drive shaft fasteners.	
ST705	369A9825	Pitch bearing stud wrench	Remove main rotor hub pitch bearing pivot pin.	
ST706	83006-809-00090 -1	Arbor press fixture (369A7951-5 bearing)	Install main rotor pitch housing bearings.	
ST707	83006-809-00090 -15	Staking tool (369A7951-5 bearing)	Staking main rotor pitch housing bearings.	
ST708	83006-809-00088	Staking tool (pilot and punch) (369A7951-45 bearing)	Install pitch control housing bearings and swage rings.	
ST709	3006-809-00090 -1/-8	Arbor press fixture (369A7951-15 bearing)	Install main rotor blade bearings.	
ST710	3006-809-00090 -15/-20	Staking tool (369A7951-15 bearing)	Stake main rotor blade bearings.	
		Fuel		
ST801	MITYVACR #4000	Hand operated vacuum pump kit	Pump down airframe and engine fuel systems for vacuum leak check.	TS13
ST801-1	AN840-D	Nipple, hose	Vacuum pump adaptive hardware.	
ST801-2	AN910-1D	Coupling		
ST801-3	AN816-4D	Nipple		
ST801-4	AS3084-04	O-ring		
ST802	369A8100-80902	Spanner wrench	Fuel cross-over fitting torquing.	
		Track and Balance		
ST901	369D29942	Tip cap assembly	Tracking main rotor blades.	
ST902	369H9928	Main rotor blade fixture and tab bending tool	Adjusting main rotor blade tab angle/blade track.	
ST903		Balancer/analyzer instrument kit	Track and balance of dynamic components.	TS5

Table 3. Special Tools (Cont.)

Item No.	Part No.	Nomenclature	Function	Vendor (Table 4)
		Electrical / Instruments / Avionics		
ST1001	RXT20-5 (extract) RTM20-9 (insert)	HYTIP insertion/extraction tool.	Install/remove HYTIP electrical contacts in terminal block modules.	TS4
ST1002	M8ND N14HCT2	HYTOOL M8ND and N14HCT	Crimp MINILOK and MODU-LOK terminal block contact tips on electrical wire.	TS4
ST1003	107-0970	Hand operated crimping tool (with positioners 107-0976 and 107-0977)	Crimp removable contacts in rectangular connectors.	TS18
ST1004	107R1001 107-1015	Contact removal tool / Contact insertion tool	Remove and insert removable contacts in rectangular connectors.	TS18
ST1005	CEIT 20	Insertion/extraction tool (20 Wire Mate connector)	Connect/disconnect No. 20 Wire Mate electrical connectors.	TS8
ST1006	CEIT 16	Insertion/extraction tool (16 Wire Mate connector)	Connect/disconnect No. 16 Wire Mate electrical connectors.	TS8
ST1007	CTJ-RO6	Deutsche module removal tool	Remove terminal block modules from instrument panel terminal block frames.	
ST1008	46673	Crimping tool	Thermocouple harness terminal lugs.	TS1
ST1009	^931	Voltmeter	Measure voltage.	TS17
ST1010	^260-7	Volt-ohmmeter	Measure resistance and voltage.	TS14
ST1011	**2312-G-8	Turbine temperature indicating system test set	Test and calibrate TOT indicating system.	TS2
ST1012	**BH112JA-36	Jetcal tester	Test and calibrate TOT indicating system.	TS7
ST1013	500N9701	Yaw S.A.S. test box	Anti-Torque stability augmentation system control rigging.	TS10
ST1014	DPI 603	Pressure calibrator	Test and calibrate torque indicating system (600N).	TS20
		Miscellaneous		
ST2001	369H4009	Pitot tube cover	Pitot Tube protection.	
ST2002	369H6661-1	Blade socks	Main rotor blade tiedown.	
ST2003	369D29913-37	Main rotor blade storage rack (369D/E/FF - 500N)	Store main rotor blades. Blade folding pole included.	
ST2004	369H9803-503	Air inlet fairing cover	Air inlet cover.	
ST2005	369H9804-101	Engine exhaust cover	Engine exhaust duct cover.	
ST2006	51-C-887	Sleeve swage, oval C-type	Particle separator installation.	TS12

Table 3. Special Tools (Cont.)

Item No.	Part No.	Nomenclature	Function	Vendor (Table 4)
ST2007	C-6000	Rivnut installation speed header	Particle separator installation.	TS3
ST2008	C-3576	Rivnut keyway cutter	Particle separator installation.	TS3
ST2009	HG85-10	Inspection gauge	Lockbolt installation inspection.	
ST2010	369D29983	Adapter, torque wrench (369D/E/FF)	Torque tailboom attachment bolts.	
ST2011	369A6001-50506 -1	Left landing gear foot drill jig	Enlarge holes in lockbolt fastened landing gear strut to install machine-bolt-attached skids.	
ST2012	369A6001-50506 -2	Right landing gear foot drill jig	Enlarge holes in lockbolt fastened landing gear strut to install machine-bolt-attached skids.	
ST2013	WSI-HT-12AS	Bushing installation tool (WSI-B-12AS grommet)	Install tail rotor control rod grommets.	TS16
ST2014	369D23601-80910	Angle measuring tool	Check horizontal stabilizer angle of incidence.	

^ Primary selection. Any equivalent meter with an accuracy capable of measuring voltage within 0.25% full scale range may be used.

* Hammer and handle same as 369A9933; –7 driver replaces –3 driver.

** Either tester may be used.

Table 4. Tool Manufacturer/Supplier Number

Number	Name
TS1	AMP Inc. 441 Friendship Rd. Harrisgurg, PA 17111 Phone: (717) 564–0100 FAX: (717) 986–7575
TS2	Barfield Instrument Corporation 4101 NW 29th Street P.O. Box 02567 Miami, FL 33102
TS3	B.F. Goodrich Co. Aerospace Products Akron, OH
TS4	Burndy Corp. Norwalk, CT
TS5	Chadwich–Helmuth 4601 N. Arden Drive El Monte, CA 91731–1299
TS6	Facet Enterprises Inc. 8439 Traid Dr. Greensboro, NC 27409
TS7	Howell Instrument Inc.
TS8	I.T.T. Cannon Electric 3208 Humboldt St. Los Angeles, CA 90031
TS9	Kell–Strom Tool Company 214 Church Street Wethersfield, CT
TS10	MD Helicopters Inc. 5000 E. McDowell Road Mesa, AZ 85215–9797
TS11	MD Helicopters Inc. Field Fabricated
TS12	National Telegraph Supply Co. Cleveland, OH
TS13	Neward Enterprises Inc. P.O. Box 725 Cucamonge, CA 91730 714–987–8975
TS14	Simpson
TS15	Tronair South 1740 Eber Road Holland, OH 43528
TS16	Western Sky Industries 21300 Cloud Way Hayward, CA 94545
TS17	Weston
TS18	Winchester Electronics, Division of Litton Industries Main St. and Hillside Ave. Oakville, CT 06779
TS19	Daniels Manufacturing Corp. 526 Thorpe Road Orlando, FL 32824 Phone: (407) 855–6161 FAX: (407) 855–6884
TS20	Druck Incorporated 4 Dunham Drive New Fairfield CT 06812 Phone: (203) 746–0400 FAX: (203) 746–2494 E–mail: druck.inc@druck.com
TS21	Brackett Aricraft Co., Inc. 7045 Flightline Dr. Kingman, AZ 86401 Phone: 928–757–4005 Fax: 928–757–1948 Sales inquiries: kfessenden@citlink.net Technical inquiries: brackett@ctaz.com

This Page Intentionally Left Blank