Manual: CSP–HMI–2, Handbook of Maintenance Instructions
Models: 369D/E/FF – 500/600N Helicopters
Issue: 31 October 1990
Revision 43: 23 December 2009

FILING INSTRUCTIONS:

1. Before inserting this change, ensure the manual is current.
   Check the existing List of Effective Pages in the manual to ensure all prior revisions are inserted. **(Do not insert this revision if prior revisions are not inserted)**.
2. Incorporate this change by removing old pages and inserting new pages as indicated below.

Remove Pages	Insert Pages
Cover/Title	
Cover/Title	Cover/Title
List of Effective Pages	
A thru J	A thru J
01	
i and ii	i and ii
01–00–00	
203 thru 213/(214 blank)	203 thru 214
04–00–01	
1/(2 blank)	1 and 2
05–20–15	
1 thru 3/(4 blank)	1 thru 4
05–20–20	
1 thru 4	1 thru 4
07	
i and ii	i and ii
08	
i and ii	i and ii
08–00–00	
203/(204 blank)	203 and 204
08–10–00	
217 and 218	217 and 218
09	
i and ii	i and ii
10	
i and ii	i and ii
11	
i and ii	i and ii
18	
iii and iv	iii and iv
25	
vii/(viii blank)	vii and viii
26	
i and ii	i and ii
28	
v thru viii	v thru viii
28–00–60	
413 thru 416	413 thru 416
605 and 606	605 thru 608
63–15–10	
405 and 406	405 and 406
409 and 410	409 and 410
63–15–30	
201 and 202	201 and 202
207/(208 blank)	207 and 208
63–21–00	
411 thru 414	411 thru 414
67–00–00	
111/(112 blank)	111 and 112
71–30–00	
411 and 412	411 and 412
75	
i and ii	i and ii
91	
i and ii	i and ii
91–00–00	
17 thru 20	17 thru 20

This Page Intentionally Left Blank

MDHI MODEL HELICOPTERS

MODELS 369D/E/FF – 500/600N

Basic Handbook of Maintenance Instructions

(CSP–HMI–2)

SERVICING AND MAINTENANCE

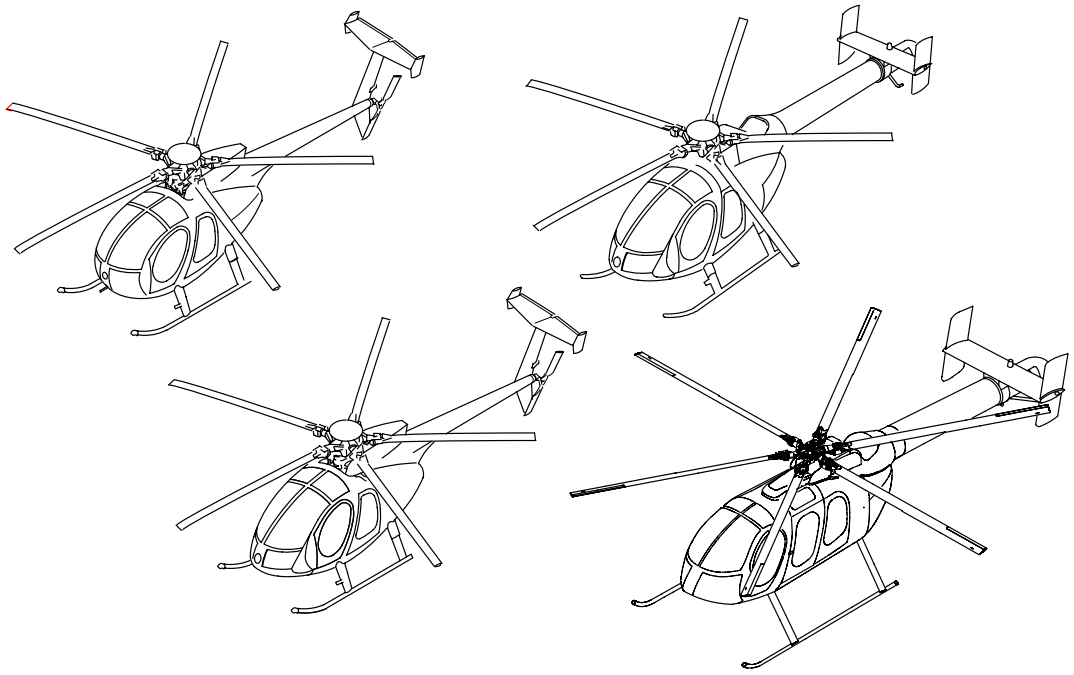

MD Helicopters, Inc.
4555 East McDowell Road
Mesa, Arizona 85215–9734

Copyright © 1999-2009 by MD Helicopters, Inc.
All rights reserved under the copyright laws.

Issued: 31 October 1990
Revision No. 43: 23 December 2009

PROPRIETARY RIGHTS NOTICE

The technical data and information contained in this publication is the property of and proprietary to MD Helicopters, Inc. and is not to be disclosed or reproduced in whole or in part without the written consent of MD Helicopters, Inc.

RESTRICTED USE

MDHI provides this manual for use by owners, operators and maintainers of MDHI products and authorized parts. Use by STC or PMA applicants or holders as documentation to support their certificates is not an authorized use of this manual and is prohibited. MDHI takes no responsibility for customer's use of parts manufactured under an STC or PMA when this manual is used as documentation with the Federal Aviation Administration to justify the STC or PMA. Use of unauthorized parts on MDHI products will void the MDHI warranty offered to the customer on components and may void the warranty on the helicopter.

MD Helicopters, Inc.
4555 East McDowell Road
Mesa, Arizona 85215–9734

LIST OF EFFECTIVE PAGES

INSERT LATEST CHANGE PAGES, DESTROY SUPERSEDED PAGES

The highest revision number indicates pages changed, added or removed by the current change.

Date of original and revision pages are:

Original	31 October 1990
Revision 1	29 March 1991
Revision 2	10 May 1991
Revision 3	09 September 1991
Revision 4	20 January 1992
Revision 5	24 August 1992
Revision 6	21 December 1992
Revision 7	01 June 1993
Revision 8	23 July 1993
Revision 9	22 April 1994
Revision 10	26 September 1994
Revision 11	18 January 1995
Revision 12	06 October 1995
Revision 13	31 May 1996
Revision 14	13 September 1996
Revision 15	15 November 1996
Revision 16	06 January 1997
Revision 17	24 February 1997
Revision 18	17 October 1997
Revision 19	16 December 1997
Revision 20	01 June 1998
Revision 21	24 August 1998
Revision 22	10 March 1998
Revision 23	01 June 1999
Revision 24	07 December 1999
Revision 25	28 April 2000
Revision 26	17 August 2000
Revision 27	09 October 2000
Revision 28	30 November 2000
Revision 29	11 May 2001
Revision 30	11 July 2001
Revision 31	05 November 2001
Revision 32	18 March 2002
Revision 33	24 June 2002
Revision 34	21 August 2003
Revision 35	20 May 2004
Revision 36	11 November 2004
Revision 37	13 December 2005
Revision 38	25 May 2006
Revision 39	10 April 2007
Revision 40	10 November 2007
Revision 41	03 March 2008
Revision 42	01 June 2009
Revision 43	23 December 2009

Cover/Title

Cover/Title . . . . . Revision 43

Change Request

CRi and CRii . . . . . N/A

Temporary Revision

1 and 2 . . . . . Revision 42

List of Effective Pages

A thru J . . . . . Revision 43

Table of Contents

i . . . . . Revision 42
ii . . . . . Revision 29
iii . . . . . Revision 34
iv . . . . . Revision 38
v and vi . . . . . Revision 29

Chapter 01

i . . . . . Revision 26
ii . . . . . Revision 43

01–00–00

1 . . . . . Revision 26
2 thru 4 . . . . . Revision 23
5 and 6 . . . . . Revision 26
7 . . . . . Revision 29
8 . . . . . Revision 28
201 . . . . . Revision 23
202 . . . . . Revision 40
203 thru 214 . . . . . Revision 43

Chapter 04
i and ii . . . . . Revision 34
04–00–00
1 thru 16 . . . . . Revision 42
04–00–01
1 . . . . . Revision 26
2 . . . . . Revision 43
Chapter 05
i and ii . . . . . Revision 42
05–00–00
1 thru 4 . . . . . Revision 38
05–10–00
1 . . . . . Revision 34
2 . . . . . Revision 40
3 . . . . . Revision 37
4 . . . . . Revision 34
05–20–00
1 . . . . . Revision 35
2 . . . . . Revision 39
3 . . . . . Revision 40
4 thru 6 . . . . . Revision 35
7 thru 12 . . . . . Revision 39
05–20–10
1 thru 3 . . . . . Revision 39
4 . . . . . Revision 38
05–20–15
1 . . . . . Revision 29
2 . . . . . Revision 43
3 . . . . . Revision 31
4 . . . . . Revision 43
05–20–20
1 . . . . . Revision 43
2 . . . . . Revision 43
3 . . . . . Revision 38
4 . . . . . Revision 43
5 . . . . . Revision 38
6 . . . . . Revision 36
05–50–00
1 thru 12 . . . . . Revision 42
Chapter 06
i and ii . . . . . Revision 34
06–00–00
201 thru 205 . . . . . Revision 23
206 . . . . . Revision 39
207 thru 210 . . . . . Revision 23
211 . . . . . Revision 36
212 . . . . . Revision 34
Chapter 07
i . . . . . Revision 23
ii . . . . . Revision 43
07–00–00
201 thru 206 . . . . . Revision 23
Chapter 08
i . . . . . Revision 23
ii . . . . . Revision 43
08–00–00
201 thru 203 . . . . . Revision 23
204 . . . . . Revision 43
08–10–00
201 . . . . . Revision 39
202 and 203 . . . . . Revision 27
204 thru 210 . . . . . Revision 23
211 . . . . . Revision 36
212 thru 217 . . . . . Revision 23
218 . . . . . Revision 43
Chapter 09
i . . . . . Revision 23
ii . . . . . Revision 43
09–00–00
201 thru 204 . . . . . Revision 23
Chapter 10
i . . . . . Revision 23
ii . . . . . Revision 43
10–10–00
201 thru 204 . . . . . Revision 23
10–20–00
201 thru 203/(204 blank) . . . . . Revision 23
10–30–00
201 thru 206 . . . . . Revision 23
Chapter 11
i . . . . . Revision 23
ii . . . . . Revision 43
11–00–00
201 thru 217/(218 blank) . . . . . Revision 23
11–40–00
201 thru 211/(212 blank) . . . . . Revision 23
Chapter 12
i . . . . . Revision 23
ii . . . . . Revision 32
12–00–00
301 and 302 . . . . . Revision 23

303 . . . . . Revision 24
304 . . . . . Revision 34
305 . . . . . Revision 26
306 and 307 . . . . . Revision 24
308 . . . . . Revision 26
309 . . . . . Revision 23
310 and 311 . . . . . Revision 32
312 . . . . . Revision 23

Chapter 18

i thru iii . . . . . Revision 23
iv . . . . . Revision 43

18–10–00

201 . . . . . Revision 23
202 . . . . . Revision 31
203 and 204 . . . . . Revision 37
401 thru 404 . . . . . Revision 23
501 . . . . . Revision 23
502 . . . . . Revision 34
503 thru 505 . . . . . Revision 23
506 and 507 . . . . . Revision 24
508 and 509 . . . . . Revision 23
510 . . . . . Revision 39

18–10–60

201 . . . . . Revision 23
202 and 203/(204 blank) . . . . . Revision 31
401 thru 404 . . . . . Revision 23
501 . . . . . Revision 23
502 . . . . . Revision 34
503 thru 509 . . . . . Revision 23
510 . . . . . Revision 37
511 and 512 . . . . . Revision 23

18–20–00

201 . . . . . Revision 34
202 and 203 . . . . . Revision 23
204 . . . . . Revision 34
205 . . . . . Revision 39
206 . . . . . Revision 23

18–20–30

201 thru 205/(206 blank) . . . . . Revision 23

Chapter 20

i and ii . . . . . Revision 41

20–10–00

201 thru 206 . . . . . Revision 38

20–20–00

201 and 202 . . . . . Revision 23

20–30–00

201 and 202 . . . . . Revision 23
203 thru 206 . . . . . Revision 34

20–40–00

201 thru 204 . . . . . Revision 23

20–90–00

201 . . . . . Revision 38
202 thru 204 . . . . . Revision 40

Chapter 21

i and ii . . . . . Revision 23

21–10–00

201 thru 204 . . . . . Revision 23

21–40–00

201 thru 207 . . . . . Revision 23
208 . . . . . Revision 27
209 . . . . . Revision 37
210 . . . . . Revision 23
901 thru 911/(912 blank) . . . . . Revision 23

Chapter 25

i . . . . . Revision 24
ii thru vii . . . . . Revision 23
viii . . . . . Revision 43

25–00–00

1 and 2 . . . . . Revision 23

25–10–00

201 thru 205 . . . . . Revision 23
206 . . . . . Revision 24
207 and 208 . . . . . Revision 23

25–15–00

201 thru 204 . . . . . Revision 23
901 and 902 . . . . . Revision 23

25–20–00

201 thru 211/(212 blank) . . . . . Revision 23

25–21–00

201/(202 blank) . . . . . Revision 23
901 thru 908 . . . . . Revision 23

25–30–00

201 thru 214 . . . . . Revision 23

25–40–00

201 thru 207/(208 blank) . . . . . Revision 23

25-50-00
101 thru 106 . . . . . Revision 23
401 thru 408 . . . . . Revision 23
601 and 602 . . . . . Revision 23
901 thru 907/(908 blank) . . . . . Revision 23

25-60-00
201 and 202 . . . . . Revision 23

25-63-00
201 thru 216 . . . . . Revision 23
901 thru 910 . . . . . Revision 23

Chapter 26
i . . . . . Revision 23
ii . . . . . Revision 43

26-10-00
201 thru 203/(204 blank) . . . . . Revision 23

26-20-00
201 and 202 . . . . . Revision 23

Chapter 28
i . . . . . Revision 19
ii . . . . . Revision 37
iii and iv . . . . . Revision 28
v . . . . . Revision 31
vi thru viii . . . . . Revision 43

28-00-00
1 and 2 . . . . . Revision 19
101 . . . . . Revision 29
102 and 103 . . . . . Revision 19
104 . . . . . Revision 23
201 and 202 . . . . . Revision 19
401 thru 414 . . . . . Revision 19
415 and 416 . . . . . Revision 36
417 thru 422 . . . . . Revision 19
501 thru 504 . . . . . Revision 19
505 . . . . . Revision 36
506 . . . . . Revision 19
507 . . . . . Revision 29
508 thru 510 . . . . . Revision 19
601 thru 603 . . . . . Revision 19
604 . . . . . Revision 28
605 thru 607/(608 blank) . . . . . Revision 19
801 thru 807/(808 blank) . . . . . Revision 19

28-00-60
1 thru 3/(4 blank) . . . . . Revision 19
101 . . . . . Revision 29
102 . . . . . Revision 19
103/(104 blank) . . . . . Revision 21
201 . . . . . Revision 32
202 . . . . . Revision 39
401 thru 405 . . . . . Revision 19
406 and 407 . . . . . Revision 34
408 thru 413 . . . . . Revision 19
414 and 415 . . . . . Revision 43
416 thru 422 . . . . . Revision 19
501 and 502 . . . . . Revision 22
503/(504 blank) . . . . . Revision 21
601 . . . . . Revision 19
602 thru 605 . . . . . Revision 31
606 thru 608 . . . . . Revision 43
801 thru 805/(806 blank) . . . . . Revision 19

28-25-00
1 . . . . . Revision 39
2 . . . . . Revision 20
101/(102 blank) . . . . . Revision 20
201 and 202 . . . . . Revision 20
203 thru 205/(206 blank) . . . . . Revision 19
601 and 602 . . . . . Revision 20
603 thru 605/(606 blank) . . . . . Revision 19
901 and 902 . . . . . Revision 20
903 . . . . . Revision 28
904 thru 918 . . . . . Revision 19

Chapter 32
i . . . . . Revision 19
ii thru vi . . . . . Revision 26

32-10-00
1/(2 blank) . . . . . Revision 19
301 thru 308 . . . . . Revision 19
401 and 402 . . . . . Revision 19
403 and 404 . . . . . Revision 26
405 . . . . . Revision 19
406 and 407/(408 blank) . . . . . Revision 26
601 . . . . . Revision 31
602 thru 605/(606 blank) . . . . . Revision 26
801 thru 805 . . . . . Revision 19
806 and 807/(808 blank) . . . . . Revision 26
901 thru 908 . . . . . Revision 19

32-10-60
1/(2 blank) . . . . . Revision 19
301 thru 303/(304 blank) . . . . . Revision 19
401 . . . . . Revision 19
402 . . . . . Revision 26
403 . . . . . Revision 34
404 . . . . . Revision 20
405 and 406 . . . . . Revision 19
407/(408 blank) . . . . . Revision 20
601 . . . . . Revision 31
602 . . . . . Revision 19
603/(604 blank) . . . . . Revision 22
801 thru 803/(804 blank) . . . . . Revision 19

32-40-00
201 thru 206 . . . . . Revision 19

32-40-60
201 and 202 . . . . . Revision 19

32-81-00
201 thru 204 . . . . . Revision 19
901 thru 910 . . . . . Revision 19

32-82-00
201 thru 206 . . . . . Revision 19
401 thru 407/(408 blank) . . . . . Revision 19
901 thru 912 . . . . . Revision 19

Chapter 52
i thru iv . . . . . Revision 36

52-10-00
201 thru 213 . . . . . Revision 25
214 thru 216 . . . . . Revision 36
217 . . . . . Revision 25
218 thru 224 . . . . . Revision 36

52-40-00
201 thru 205/(206 blank) . . . . . Revision 18

52-50-00
201 thru 206 . . . . . Revision 18
207 . . . . . Revision 31
208 thru 210 . . . . . Revision 18

Chapter 53
i thru vi . . . . . Revision 40

53-00-00
201 . . . . . Revision 19
202 . . . . . Revision 37
203 . . . . . Revision 19
204 . . . . . Revision 20

53-10-00
201 thru 206 . . . . . Revision 19

53-20-00
201 thru 203/(204 blank) . . . . . Revision 19

53-30-00
201 . . . . . Revision 35
202 and 203 . . . . . Revision 19
204 thru 214 . . . . . Revision 38

53-30-30
201 . . . . . Revision 26
202 thru 210 . . . . . Revision 34

53-40-00
201 thru 204 . . . . . Revision 19

53-40-30
201 . . . . . Revision 36
202 . . . . . Revision 19
203 . . . . . Revision 22
204 . . . . . Revision 19
205 thru 214 . . . . . Revision 39

53-50-10
201 and 202 . . . . . Revision 19
203 . . . . . Revision 22
204 and 205 . . . . . Revision 37
206 . . . . . Revision 40
207/(208 blank) . . . . . Revision 19

53-50-30
201 and 202 . . . . . Revision 42
203 and 204 . . . . . Revision 33
205 thru 212 . . . . . Revision 40

Chapter 62
i thru viii . . . . . Revision 37

62-00-00
101 . . . . . Revision 20
102 . . . . . Revision 31

62-10-00
401 thru 403/(404 blank) . . . . . Revision 20
601 thru 605 . . . . . Revision 20
606 . . . . . Revision 40
607 . . . . . Revision 20
608 . . . . . Revision 33
609 . . . . . Revision 29
610 and 611 . . . . . Revision 35
612 . . . . . Revision 20

801 . . . . . Revision 33
802 thru 808 . . . . . Revision 20
809 . . . . . Revision 34
810 and 811/(812 blank) . . . . . Revision 20

62–20–00
401 . . . . . Revision 36
402 and 403 . . . . . Revision 20
404 . . . . . Revision 36
405 and 406 . . . . . Revision 20
601 and 602 . . . . . Revision 20
603 . . . . . Revision 29
604 . . . . . Revision 25
605 thru 607 . . . . . Revision 20
608 . . . . . Revision 37
609 and 610 . . . . . Revision 20
801 . . . . . Revision 20
802 . . . . . Revision 34
803 thru 810 . . . . . Revision 20
811 thru 813 . . . . . Revision 37
814 . . . . . Revision 21
815 . . . . . Revision 35
816 . . . . . Revision 34
817 and 818 . . . . . Revision 40
819 and 820 . . . . . Revision 37

62–20–60
401 . . . . . Revision 36
402 . . . . . Revision 20
403 and 404 . . . . . Revision 36
405/(406 blank) . . . . . Revision 20
601 and 602 . . . . . Revision 20
603 . . . . . Revision 33
604 . . . . . Revision 20
605 . . . . . Revision 34
606 and 607 . . . . . Revision 33
608 . . . . . Revision 20
609 . . . . . Revision 25
610 . . . . . Revision 20
801 thru 804 . . . . . Revision 20
805 thru 808 . . . . . Revision 37
809 . . . . . Revision 22
810 . . . . . Revision 37
811 . . . . . Revision 22
812 and 813 . . . . . Revision 34
814 . . . . . Revision 37

62–30–00
401 . . . . . Revision 20
402 . . . . . Revision 36
403 and 404 . . . . . Revision 31
405 . . . . . Revision 36
406 . . . . . Revision 27
407 and 408 . . . . . Revision 35
601 and 602 . . . . . Revision 32
801 thru 807/(808 blank) . . . . . Revision 20

62–30–60
401 . . . . . Revision 20
402 . . . . . Revision 27
403 . . . . . Revision 31
404 thru 406 . . . . . Revision 35
407/(408 blank) . . . . . Revision 20
601 and 602 . . . . . Revision 32
801 and 802 . . . . . Revision 20

Chapter 63
i thru x . . . . . Revision 42

63–00–00
101 . . . . . Revision 28
102 . . . . . Revision 29
103 . . . . . Revision 30
104 . . . . . Revision 28

63–10–00
401 thru 403 . . . . . Revision 20
404 . . . . . Revision 36
405 . . . . . Revision 27
406 . . . . . Revision 42
407 . . . . . Revision 20
408 . . . . . Revision 32
409 . . . . . Revision 39
410 . . . . . Revision 32
411 . . . . . Revision 34
412 thru 414 . . . . . Revision 32
601 . . . . . Revision 26
602 . . . . . Revision 20
603 . . . . . Revision 26
604 thru 606 . . . . . Revision 20
801 thru 804 . . . . . Revision 20

63–15–10
401 . . . . . Revision 20
402 thru 404 . . . . . Revision 42
405 . . . . . Revision 43
406 and 407 . . . . . Revision 42
408 . . . . . Revision 20
409 . . . . . Revision 43

410 . . . . . Revision 28
601 thru 603 . . . . . Revision 20
604 . . . . . Revision 37
605/(606 blank) . . . . . Revision 20
801 and 802 . . . . . Revision 20

63–15–30
201 . . . . . Revision 20
202 . . . . . Revision 43
203 thru 207 . . . . . Revision 20
208 . . . . . Revision 43

63–20–00
201 thru 203 . . . . . Revision 20
204 and 205 . . . . . Revision 36
206 and 207/(208 blank) . . . . . Revision 20

63–20–25
201 and 202 . . . . . Revision 20
203 . . . . . Revision 41
204 . . . . . Revision 28
205 . . . . . Revision 24
206 thru 209/(210 blank) . . . . . Revision 29

63–21–00
401 and 402 . . . . . Revision 20
403 . . . . . Revision 28
404 thru 407 . . . . . Revision 20
408 thru 410 . . . . . Revision 42
411 . . . . . Revision 43
412 . . . . . Revision 42
413 . . . . . Revision 43
414 . . . . . Revision 42
601 . . . . . Revision 41
602 . . . . . Revision 36
603 . . . . . Revision 37
604 . . . . . Revision 36
801 and 802 . . . . . Revision 22
803 . . . . . Revision 37
804 and 805 . . . . . Revision 36
806 and 807 . . . . . Revision 37
808 and 809 . . . . . Revision 36
810 . . . . . Revision 22

63–22–00
201 and 202 . . . . . Revision 20
203 . . . . . Revision 42
204 . . . . . Revision 20
401 thru 413/(414 blank) . . . . . Revision 20
601 and 602 . . . . . Revision 20
901 thru 917/(918 blank) . . . . . Revision 20

63–25–10
201 . . . . . Revision 36
202 . . . . . Revision 20
203 . . . . . Revision 40
204 thru 207/(208 blank) . . . . . Revision 20

63–25–30
201 . . . . . Revision 36
202 . . . . . Revision 20
203 . . . . . Revision 33
204 . . . . . Revision 20

63–30–00
201 and 202 . . . . . Revision 20
203 and 204 . . . . . Revision 36
205 . . . . . Revision 29
206 . . . . . Revision 36

Chapter 64

i thru iv . . . . . Revision 42

64–00–00
101 . . . . . Revision 21
102 . . . . . Revision 34

64–00–05
901 thru 908 . . . . . Revision 21

64–10–00
201 . . . . . Revision 34
202 thru 206 . . . . . Revision 21
207 . . . . . Revision 32
208 thru 210 . . . . . Revision 21
211 thru 214 . . . . . Revision 22

64–20–00
201 thru 203 . . . . . Revision 21
204 . . . . . Revision 28
205 thru 207/(208 blank) . . . . . Revision 21

64–25–30
401 . . . . . Revision 41
402 and 403 . . . . . Revision 42
404 thru 407 . . . . . Revision 41
408 . . . . . Revision 34
601 . . . . . Revision 42
602 . . . . . Revision 39
801 . . . . . Revision 42
802 . . . . . Revision 21
803 thru 808 . . . . . Revision 42

64–30–00
201 . . . . . Revision 21
202 . . . . . Revision 36
203 and 204 . . . . . Revision 21
205 . . . . . Revision 40
206 and 207 . . . . . Revision 34
208 thru 210 . . . . . Revision 21

Chapter 67

i thru xii . . . . . Revision 42

67–00–00
101 . . . . . Revision 30
102 and 103 . . . . . Revision 21
104 . . . . . Revision 29
105 and 106 . . . . . Revision 42
107 thru 111 . . . . . Revision 30
112 . . . . . Revision 43

67–10–00
1 thru 5/(6 blank) . . . . . Revision 21
401 thru 405 . . . . . Revision 21
406 . . . . . Revision 37
407 thru 411 . . . . . Revision 21
412 . . . . . Revision 29
413 . . . . . Revision 24
414 . . . . . Revision 21
415 thru 417 . . . . . Revision 29
418 . . . . . Revision 39
419 . . . . . Revision 21
420 . . . . . Revision 29
421 . . . . . Revision 21
422 . . . . . Revision 29
423 . . . . . Revision 31
424 . . . . . Revision 29
501 thru 503 . . . . . Revision 21
504 . . . . . Revision 42
505 . . . . . Revision 34
506 . . . . . Revision 21
507 . . . . . Revision 34
508 and 509 . . . . . Revision 21
510 . . . . . Revision 24
511 . . . . . Revision 38
512 thru 515 . . . . . Revision 21
516 . . . . . Revision 36
517 thru 521 . . . . . Revision 21
522 . . . . . Revision 36
523 . . . . . Revision 29
524 . . . . . Revision 31
525 and 526 . . . . . Revision 36
527 thru 530 . . . . . Revision 21
601 . . . . . Revision 28
602 . . . . . Revision 21
603 . . . . . Revision 28
604 . . . . . Revision 39
605 . . . . . Revision 21
606 and 607 . . . . . Revision 39
608 . . . . . Revision 28
609 and 610 . . . . . Revision 39
801 thru 813 . . . . . Revision 21
814 and 815 . . . . . Revision 31
816 . . . . . Revision 21

67–10–20
201 thru 202 . . . . . Revision 21
203 . . . . . Revision 40
204 thru 208 . . . . . Revision 21

67–20–10
1 and 2 . . . . . Revision 21
401 and 402 . . . . . Revision 21
403 . . . . . Revision 34
404 . . . . . Revision 26
405 thru 407/(408 blank) . . . . . Revision 21
501 thru 504 . . . . . Revision 21
601 and 602 . . . . . Revision 21
801 thru 806 . . . . . Revision 21

67–20–30
1 . . . . . Revision 34
2 . . . . . Revision 25
401 . . . . . Revision 18
402 . . . . . Revision 34
403 . . . . . Revision 18
404 . . . . . Revision 33
405 . . . . . Revision 38
406 . . . . . Revision 34
407 . . . . . Revision 38
408 . . . . . Revision 25
409 thru 412 . . . . . Revision 33
413 . . . . . Revision 25
414 thru 416 . . . . . Revision 30
501 . . . . . Revision 33
502 . . . . . Revision 18
503 . . . . . Revision 20

504 . . . . . Revision 18
505 . . . . . Revision 30
506 . . . . . Revision 18
507 . . . . . Revision 26
508 . . . . . Revision 30
509 . . . . . Revision 37
510 and 511 . . . . . Revision 30
512 . . . . . Revision 36
513 thru 516 . . . . . Revision 30
601 . . . . . Revision 34
602 . . . . . Revision 35
603 . . . . . Revision 39
604 and 605 . . . . . Revision 24
606 . . . . . Revision 39
801 thru 803 . . . . . Revision 18
804 thru 806 . . . . . Revision 42

Chapter 71

i thru x . . . . . Revision 36

71–00–00

1/(2 blank) . . . . . Revision 22
401 thru 405 . . . . . Revision 22
406 . . . . . Revision 30
407 thru 411 . . . . . Revision 22
412 and 413/(414 blank) . . . . . Revision 26

71–00–30

1/(2 blank) . . . . . Revision 22
401 thru 404 . . . . . Revision 22
405 and 406 . . . . . Revision 34
407 thru 411 . . . . . Revision 22
412 . . . . . Revision 26

71–00–47

1 thru 3/(4 blank) . . . . . Revision 22
401 thru 406 . . . . . Revision 22
407 . . . . . Revision 36
408 thru 411/(412 blank) . . . . . Revision 29

71–10–00

201 thru 206 . . . . . Revision 22

71–10–05

201/(202 blank) . . . . . Revision 22
901 thru 904 . . . . . Revision 22

71–10–10

1 . . . . . Revision 22
2 . . . . . Revision 36
3 and 4 . . . . . Revision 22
101 thru 106 . . . . . Revision 36
201 thru 207/(208 blank) . . . . . Revision 22
401 . . . . . Revision 22
402 . . . . . Revision 37
403/(404 blank) . . . . . Revision 22
601 . . . . . Revision 39
602 and 603 . . . . . Revision 22
604 . . . . . Revision 38
801 thru 814 . . . . . Revision 22
901 thru 923/(924 blank) . . . . . Revision 22

71–10–60

1/(2 blank) . . . . . Revision 22
101/(102 blank) . . . . . Revision 22
401 . . . . . Revision 22
402 thru 404 . . . . . Revision 29
601 . . . . . Revision 29
602 . . . . . Revision 33

71–20–00

1/(2 blank) . . . . . Revision 22
401 . . . . . Revision 26
402 . . . . . Revision 22
403 and 404 . . . . . Revision 34
405/(406 blank) . . . . . Revision 22
601/(602 blank) . . . . . Revision 22
801/(802 blank) . . . . . Revision 22

71–30–00

1 and 2 . . . . . Revision 22
101 thru 103/(104 blank) . . . . . Revision 22
401 thru 410 . . . . . Revision 22
411 . . . . . Revision 43
412 . . . . . Revision 22
413 and 414 . . . . . Revision 26
601 and 602 . . . . . Revision 32
801 thru 804 . . . . . Revision 22
901 thru 905/(906 blank) . . . . . Revision 22

71–60–00

201 thru 205/(206 blank) . . . . . Revision 22

Chapter 75
i . . . . . Revision 22
ii . . . . . Revision 43
75–10–00
201 thru 203 . . . . . Revision 22
204 . . . . . Revision 37
205 and 206 . . . . . Revision 22
Chapter 76
i thru iv . . . . . Revision 37
76–00–00
1 and 2 . . . . . Revision 22
101 and 102 . . . . . Revision 22
76–10–00
201 thru 214 . . . . . Revision 22
215 . . . . . Revision 35
216 and 217 . . . . . Revision 42
218 and 219 . . . . . Revision 35
220 and 221 . . . . . Revision 22
222 and 223 . . . . . Revision 35
224 . . . . . Revision 22
76–20–00
201 thru 213/(214 blank) . . . . . Revision 22
76–47–00
201 . . . . . Revision 22
202 and 203 . . . . . Revision 37
204 . . . . . Revision 33
205 and 206 . . . . . Revision 37
207 . . . . . Revision 22
208 thru 211 . . . . . Revision 37
212 . . . . . Revision 36
Chapter 78
i and ii . . . . . Revision 35
78–20–00
201 thru 203 . . . . . Revision 38
204 thru 209/(210 blank) . . . . . Revision 22
78–30–00
201 . . . . . Revision 38
202 thru 204 . . . . . Revision 35
Chapter 79
i and ii . . . . . Revision 23
79–00–00
201 thru 212 . . . . . Revision 23
79–10–10
201 and 202 . . . . . Revision 26
901 thru 903/(904 blank) . . . . . Revision 23
Chapter 91
i and ii . . . . . Revision 43
91–00–00
1 . . . . . Revision 23
2 . . . . . Revision 34
3 . . . . . Revision 36
4 thru 16 . . . . . Revision 41
17 . . . . . Revision 42
18 thru 20 . . . . . Revision 43
21 and 22 . . . . . Revision 41

TABLE OF CONTENTS

Para/Figure/Table	Title	Page
01-00-00	**Introduction**	**A**
	Description and Operation	**1**
1.	Proprietary Rights	1
2.	Introduction	1
3.	369D/E/FF – 500/600N Helicopter Description	1
	Figure 1. Helicopter – Major Components (Sheet 1 of 3)	2
4.	Scope	5
5.	ATA Numbering System and Format	5
	Figure 2. ATA Numbering System	5
6.	Division of Subject Matter	6
7.	Page Number Blocks	6
8.	Figure and Table Numbering	6
9.	Associated MDHI Manuals	6
	A. Illustrated Parts Catalog	6
	B. Component Overhaul Manual (Overhaul Data)	6
	C. Structural Repair Manual	6
10.	Engine Data	6
11.	MDHI Publications Changes and Revisions	7
	A. Revision	7
	B. Reprint	7
	C. Service Information Notices and Letters	7
12.	Application of Warnings, Cautions and Notes	7
13.	Service and Operations Report Form 1601	8
	Maintenance Practices	**201**
1.	Maintenance and Operational Check Requirements and Precautions	201
	A. Pilot's or Rotorcraft Flight Manual	201
	B. Operational Checks	201
2.	Inspections	201
3.	Maintenance Information Requests	201
4.	Related Publications	201
5.	Optional Equipment	201
	Table 201. Related Publications and Directives	202
	Table 202. Optional Equipment List	209

TABLE OF CONTENTS (Cont.)

Para/Figure/Table	Title	Page

This Page Intentionally Left Blank

Table 201. Related Publications and Directives (Cont)

Component and Manufacturer, or Source	Publication Title	Publication or Directive No.
MDHI Publications		
MD Helicopters Inc. M615–G048 4555 E. McDowell Rd. Mesa, AZ 85215–9734 Technical Publications Order Desk: (480) 346–6373 or (800) 388–3378 FAX: (480) 346–6809	369D Pilot's Flight Manual (with applicable Equipment Supplements)	CSP–D–1 (1)
	369E Pilot's Flight Manual (with applicable Equipment Supplements)	CSP–E–1 (1)
	369FF Pilot's Flight Manual (with applicable Equipment Supplements)	CSP–FF–1 (1)
	500N Pilot's Flight Manual (with applicable Equipment Supplements)	CSP–520N–1 (1)
	600N Pilot's Flight Manual (with applicable Equipment Supplements)	CSP–600NRFM–1 (1)
	Illustrated Parts Catalog (IPC), Model 369D/E/F – 500/600N	CSP–IPC–4 (1)
	Basic Handbook of Maintenance Instructions (HMI–2) Servicing and Maintenance, Model 369D/E/F – 500/600N	CSP–HMI–2 (1)
	Basic Handbook of Maintenance Instructions (HMI–3) Instruments–Electrical–Avionics, Model 369D/E/F – 500/600N	CSP–HMI–3 (1)
	Component Overhaul Manual (COM), Model 369D/E/F – 500/600N	CSP–DEF–5 (1)
	Structural Repair Manual (SRM), Model 369D/E/F – 500N	CSP–DEF–6 (1)
	Illustrated Structures Catalog (ISC), Model 369D	CSP–D–7 (1)
	Illustrated Structures Catalog (ISC), Model 369D/E/FF – 500N	CSP–ICS–7 (1)
	Corrosion Control Manual	CSP–A–4
Battery		
Marathon Battery Company Cold Spring, NY 10516 Phone: (817) 776–0650 (formerly Sonotone)	Marathon Battery Instruction Manual	BA–89 (REV 2–71)

Table 201. Related Publications and Directives (Cont)

Component and Manufacturer, or Source	Publication Title	Publication or Directive No.
Engine		
Rolls–Royce Corporation P.O. BOX 420 Indianapolis, IN 46206 USA Phone: 317–230–3774 Fax: 317–230–6084 email: indy.pubs.services@rolls–royce.com	Operation and Maintenance Manual, Turboshaft Engine Model 250–C20, –C20B	10W2 (1)
	Overhaul Manual, Turboshaft Engine Model 250–C20, –C20B	10W3 (1)
	Illustrated Parts Catalog, Turboshaft Engine Model 250–C20, –C20B	10W4 (1)
	Installation Bulletin, Three Cubic Inch Accumulator for 250–C20 Bendix Fuel System	1005 (1)
	Operation and Maintenance Manual, Turboshaft Engine Model 250–C20R/2	GTP–5232–2 (1)
	Overhaul Manual, Turboshaft Engine Model 250–C20R/2	GTP–5232–3 (1)
	Illustrated Parts Catalog, Turboshaft Engine Model 250–C20R/2	GTP–5232–4 (1)
	Operation and Maintenance Manual, Turboshaft Engine Model 250–C30	14W2 (1)
	Overhaul Manual, Turboshaft Engine Model 250–C30	14W3 (1)
	Illustrated Parts Catalog, Turboshaft Engine Model 250–C30	14W4 (1)
	Operation and Maintenance Manual, Turboshaft Engine Model 250–C47M	CSP 21004 (1)
	Overhaul Manual, Turboshaft Engine Model 250–C47M	CSP 22004 (1)
	Illustrated Parts Catalog, Turboshaft Engine Model 250–C47M	CSP 23001 (1)
Starter–Generator		
Aircraft Parts Corporation 160 Finn Court Farmingdale, NY 11735 Phone: (516) 249–3053 Datafax: (516) 249–2577	Brush Seating – APC Brushes in High Speed Starter Generators: MDHI Part Nos. 369A4550 and 369D28550	SB150SG105
	Overhaul Manual With Illustrated Parts Breakdown	TM 101
TRW Aeronautical Systems Lucas Aerospace 30 Van Nostrand Ave. Englewood, NJ 07631–4396 Phone: (201) 541–3250 Datafax: (201) 894–1965	Overhaul Instructions with Parts Breakdown, Models 23032–010, 23032–011, 23032–020, 23032–022, 23032–028, 23081–001	Call or write
Fargo Manufacturing Co. 2750 North Elston Ave. Chicago, Illinois 606447	Starter/Generator Cooling System Supplemental Type Certificate	STC No. SH907GL

Table 201. Related Publications and Directives (Cont)

Component and Manufacturer, or Source	Publication Title	Publication or Directive No.
Avionics Equipment		
VHF/COMM Transceiver RCA Aviation Equipment Dept. 11819 W. Olympic Blvd. Los Angeles, CA 90064	AVC−110 VHF Communications Transceiver Instruction Manual	IB8029004
VHF/NAV Receiver RCA Aviation Equipment Dept.	AVN−210 Series Integrated Navigation Systems	IB96460
University Sound of LTV Ling Altec, Inc. Oklahoma City, OK	Operators Manual, SA−250 and SA−500 High Power Sound and Siren Systems	
	Operators Manual, Model 500 Super High Power Solid−State Amplifier and Model RMC−1 Remote Control	
Automatic Direction Finder King Radio Corp. 400 North Rogers Road Olathe, KS	KR 85 Automatic Direction Finder Installation Manual (has repair/overhaul information)	006−0043−00
	KR 86 Automatic Direction Finder Maintenance/Overhaul Manual	006−5084−00
	KR 87 Automatic Direction Finder Maintenance/Overhaul Manual	006−5184−00
NAV/COMM Receiver King Radio Corp.	KX 155 NAV COMM Receiver Maintenance/Overhaul Manual	006−5179−00
NAV/COMM Transceiver and COMM Transceiver King Radio Corp.	KX 170A/B − KX 175B NAV/COMM Transceiver and KY 195B Communications Transceiver Maintenance/Overhaul Manual	006−5053−00
COMM Transceiver King Radio Corp.	KY 196 VHF COMM Transceiver Maintenance/Overhaul Manual	006−5169−00
Transponder King Radio Corp.	KT 76A Transponder Maintenance/Overhaul Manual	006−5143−00
VOR Indicator King Radio Corp.	KI 201C VOR Indicator Maintenance/ Overhaul Manual	006−5052−00
	KI 208 VOR Indicator Maintenance/Overhaul Manual	006−5137−00
Audio Control Panel King Radio Corp.	KMA 24H−70/71 Audio Selector Panel and Interphone System Maintenance/ Overhaul Manual	006−5586−00

Table 201. Related Publications and Directives (Cont)

Component and Manufacturer, or Source	Publication Title	Publication or Directive No.
Automatic Direction Finder System Collins General Aviation Division Avionics Group Rockwell International Corp. Cedar Rapids, Iowa 52498	ADF–60 Automatic Direction Finder System Instruction Book	523–0766184–00611A
	CTL–X2 Controls and CAD–62 Control Adaptor Instruction Book	523–0772494–00111A
	Collins Pro Line II Com/Nav/Pulse System Instruction Book	523–0772719–00211A
ALT–55 Radio Altimeter System Collins General Aviation Division Publication Dept. 124–212 400 Collins Rd. NE Cedar Rapids, Iowa 52498	ALT–55 Radio Altimeter System Instruction Book (Repair Manual	523–0766793
Automatic Direction Finder System Collins General Aviation Division	ADF–650/650A Automatic Direction Finder System – RCR–650/650A Receiver, ANT–650 Antenna, IND–650/650A Indicator and ADA–650 ADF to RMI Adaptor Instruction Book	523–0766207–00411A
COMM Transceiver Collins General Aviation Division	VHF–22B VHF COMM Transceiver Instruction Book	523–0771854–00311A
	VHF–251 Communications Transceiver and PWC–150 Power Convertor Instruction Book	523–0766029–00511A
NAV Receiver Collins General Aviation Division	VIR–351 Navigation Receiver, IND–350 Indicator, and PWC–150 Power Convertor Instruction Book	523–0766030–00511A
Transponder Collins General Aviation Division	TDR–950 Transponder Instruction Book	523–0766464–00311A
VHF AM/FM AN/ARC–186(V) Collins Government Avionics Division Avionics & Missiles Group Rockwell International Cedar Rapids, Iowa 52406	Collins VHF–186 Transceiver Instruction Book	523–0770251–00111A
ICS Control Panel (C–6533/ARC) Andrea Radio Corp. 11–40 45 Road Long Island City, NY 11101	A301–1 Communication Control Technical Manual – Installation, Operation and Maintenance	C46–5020 027
COMM Transceiver Sunair Electronics, Inc. 3101 S.W. Third Avenue Fort Lauderdale, FL 33315	ASB–125, ASB–60 SSB Communications Equipment Maintenance Manual	99655

Table 201. Related Publications and Directives (Cont)

Component and Manufacturer, or Source	Publication Title	Publication or Directive No.
Spilsbury & Tindall, Ltd. 120 E. Cordova Street Vancouver 4, B.C. Canada	Instruction Manual, "Stringer" Model AC–21 Mobile Antenna System	65–018
Fuel Cells		
Uniroyal, Inc. Engineered Systems Department Mishawaka, Indiana 46544 Phone: (219) 255–2181	Recommended Handling, Storage and Repair Procedures For Non–Self–Sealing Flexible Fuel, Oil And Water Alcohol Cells	FC–1473–73
	Repair Procedure For Self–Sealing Fuel Cells	RK–10–34
Engineered Fabrics Corp. Formerly: Loral Systems Group 669 Goodyear Street Rockmart, GA 30153–2417 Phone: (404) 684–7855	Maintenance and Repair Manual, VITHANE\R Fuel Tanks, July 1988, ATA 28–10–13	AP 368
	Quick Cure Repair for Engineered Fabrics Corp. Fuel Tanks of VITHANE\R Construction, March 1988, ATA 28–10–15	AP 472
	Repair & Maintenance Manual, Bladder, Self Sealing, & Non–Self–Sealing Tanks, ARM Type Constructions, April 1987, ATA 28–10–16	AP 430
	Repair & Maintenance Manual, Bladder Fuel Tanks, Nitrile Type Constructions, June 1988, ATA 28–10–1	AP 258–4
Naval Publications & Forms East: 5801 Tabor Avenue Philadelphia, PA 19120 Phone: (215) 697–2179 Datafax: (215) 697–5914 West: Bookstore No. 10 ARCO Plaza, Level C 505 S. Flower Street Los Angeles, CA 90071 Phone: (213) 894–5841	Military Standard Inspection & Acceptance Standards For Propulsion Fluid Cells & Fittings	MIL–STD–801A

NOTE: Naval Publications personnel do not accept telephone orders. You must mail or FAX your written request. There is no charge for the material.

Table 201. Related Publications and Directives (Cont)

Component and Manufacturer, or Source	Publication Title	Publication or Directive No.
Hoist Equipment		
Hoist Winch Assembly Breeze Corporations, Inc. 700 Liberty Avenue Union, NJ 07083	BL–16600–12 Series 300 Pound Capacity Hoist Operating Instructions BL–16600–40 Series Hoist Operating Instructions Use and Maintenance of Aircraft Hoist Cable	HB–136
Maintenance and Test Equipment		
Model 177M–6 Balancer Model 8350 Balancer Model 192A Balancer Model 8500 Balancer Model 135M–11 Strobex Blade Tracker Model 135M–12 Strobex Blade Tracker – must be used with Model 8500 Balancer Chadwick–Helmuth Co., Inc. 4601 N. Arden Drive El Monte, CA 91731 Phone: (818) 575–6161 Datafax: (818) 350–4236	Chadwick–Helmuth Operation and Service Instruction Handbooks are normally supplied with the equipment.	Call or write
Landing Gear Equipment		
Helicopter Float Assemblies Garrett–Air Cruiser Company P.O. Box 180 Belmar, NJ	Overhaul Manual with Illustrated Parts List, Helicopter Float Assemblies, Utility Floats 21D24368–1/–2, Emergency Floats D24484–5/–6	
Transmissions		
Threaded Inserts Newton Insert Co. 6500 Avalon Blvd. Los Angeles, CA 90003	Keenserts	Catalog D
Engine Oil Cooler		
Harrison Radiator Division General Motors Corp. Lockport, NY 14094	Service Overhaul Manual, Harrison Aluminum Plate Type Liquid–to–Air Coolers	HES–66 77F Revised Sept 30, 1973
Stewart Warner Corp. Southwind Division 1514 Drover Street Indianapolis, Indiana 46221 Phone: (317) 632–8411		

Table 201. Related Publications and Directives (Cont)

Component and Manufacturer, or Source	Publication Title	Publication or Directive No.
Scavenge Oil Filter		
Filter Products Division Facet Enterprises, Inc. 8439 Triad Drive Greensboro, NC 27409 Phone: (919) 668–4444 TWX 510–922–7331	Facet Kit No. 1741050–01 Installation and Service Manual Scavenge Lube Oil Filter	E–947, Rev. D 3/10/89 (1)
Engine Intake Air Particle Separator		
Pall Land Marine Corp. (PLM) Formerly: Aircraft Porous Media (APM) 7070 Moon Lake Road New Port Richey, FL 33552 Phone: (813) 849–9999	Vortex Tube Repair	PLM–TM–80–1
Fuel Filter Pressure Switch		
R.W. Jensen, Inc., 215 Arena Street El Segundo, CA 90245	Pressure Switch Repairs	
Trim Actuators		
CEF Industries, Inc., Calco Division TEL: (813) 422–6419 FAX: (813) 421–2069	Trim Actuator Overhaul	
Searchlight		
Alexair 25320 Bellanca Way Torrance, CA 90505 Phone: (213) 326–5222	SX Nightsun Searchlight (Spectrolab)	STC No. SH2288NM

NOTES:

(1) Publication should be maintained and treated as part of the primary information file for the helicopter.

Table 202. Optional Equipment List

Nomenclature	Part Number	369D	369E	369FF	500N	600N
10 – PARKING AND MOORING						
M/R blade stowage rack	369D299913	X	X	X		
21 – ENVIRONMENTAL CONTROL SYSTEM						
Heating system	369H90020	X	X	X	X	X
25 – EQUIPMENT / FURNISHINGS						
Seat assy. passenger compartment	369D290037	X				
Litter kit (bubble doors and flat glass)	369H90011–519	X	X			
Litter kit (W/O doors)	369H90011–521	X	X			
Seat and belts (four on the floor)	369H90035	X	X	X	X	
Seat (mesh)	369H90040	X	X	X	X	
Hoist	369H90070	X	X	X	X	
Cargo hook	369H90072	X	X	X	X	X
Seat belt assembly (pilot, co–pilot)	369H6541	X				
Shoulder harness and seat belt inertia reel	421–099		X	X	X	
Litter kit	369D290170	X	X			
Litter kit	TA–HH–0001	X	X	X		
Forward equipment tray	369D292200		X	X	X	
26 – FIRE PROTECTION						
Fire extinguisher	369H90001	X	X	X	X	X
28 – FUEL SYSTEM						
Anti–ice fuel filter	369H90022	X	X		X	
Airframe fuel filter	600N98110					X
Fuel tank, self–sealing	369H90029	X	X	X	X	
Drain, auxiliary engine fuel filter	369H92255	X				
32 – LANDING GEAR						
Extended landing gear	369D290007	X	X	X	X	
Extended landing gear	600N6000					X
Step assembly, extended landing gear	600N6501					X
Utility floats	369D290086	X	X			
Emergency floats	369D290121	X	X	X	X	
Ground handling wheels (pneumatic)	369H90045	X	X	X	X	
Ground handling wheels (compact)	369H90126	X	X	X	X	
Float lamp assembly	369D292032	X	X		X	X
Landing gear kit, winterized	369D290010	X	X	X	X	
Landing gear kit, mid–temp	369D290012	X	X	X	X	
Metal landing gear fairings	SA4344				X	

Table 202. Optional Equipment List (Cont)

Nomenclature	Part Number	369D	369E	369FF	500N	600N
52 – DOORS						
Door (litter)	369H90085	X				
53 – FUSELAGE						
Magnesium–to–aluminum conversion kit	M30251–501	X	X	X	X	
Clear windshield kit	369H90026	X				
Comfort window	369D290026		X	X	X	
Side window (fwd extended canopy)	369D292491		X	X		
Upper and lower windshield (Heliplex)	SH7443SW		X	X	X	
Window, crew (Heliplex)	SH7404SW		X	X	X	
Window, passenger (Heliplex)	SH7405SW		X	X	X	
63 – TRANSMISSION AND DRIVE SYSTEM						
M/R transmission oil cooler drain	369D290120	X				
Rotor brake	369H90123	X	X	X	X	X
64 – ANTI–TORQUE ASSEMBLY						
4–Bladed tail rotor drive system	369D292500	X	X			
67 – FLIGHT CONTROLS						
Dual controls, L/H command	369H90033	X	X	X	X	X
Cyclic stick grip kit	369H90129	X	X	X	X	
Right hand command kit	369D297001	X	X	X	X	X
Yaw Stability Augmentation System	600N97300					X
71 – POWER PLANT						
Engine air inlet deflector kit	369D292044	X	X			
Mist eliminator access panel	369D290270	X	X	X		
Foriegn particle diverter kit	369D292045	X	X			
250–C20R/2 conversion kit	369D298000	X	X			
Particle separator	369H90148	X	X	X	X	
Particle separator filter Particle separator Particle separator fairing	600N90148 600N90125 600N90128					X X X
Engine compressor water wash kit	369H92537	X	X	X	X	X
Mist eliminator	369D290125				X	
C30 maintenance fuel pump kit	369D298100			X	X	
Starter–Generator cooling system A1400–185	SH907GL				X	
95 – INSTRUMENTS						
IVSI	369D294508		X	X	X	
Heated pitot tube	369H90034	X	X	X	X	
Heated pitot tube	600N90034					X

Table 202. Optional Equipment List (Cont)

Nomenclature	Part Number	369D	369E	369FF	500N	600N
Attitude gyro indicator	369H90038	X	X	X	X	
AIM attitude gyro (510–1BL)	600N96501					X
Directional gyro indicator	369H90039	X	X	X	X	
AIM 200 directional gyro (200DCL)	600N96502					X
AIM 205 directional gyro (205–1BL)	600N96503					X
Instantaneous vertical speed indicator	369H90044	X	X	X		
Vertical speed indicator	600N96523					X
Instantaneous vertical speed indicator	600N96524					X
Auto direction finder (KR–85)	369H90067	X				
Auto direction finder (Collins ADF–650A)	369D24165		X	X		
Auto direction finder (KR–87)	600N96508					X
Compass system (KCS–55A)	600N96528					X
Altimeter indicator (millibar scale)	369H90124	X	X	X		
Radar altimeter	600N96506					X
Encoding altimeter (United 5035)	600N96522					X
AIM turn/bank indicator (TS400–1AL)	600N96504					X
Digital/Analog TOT indicator	369D294509	X	X		X	
96 – ELECTRICAL POWER						
17AH ni–cad battery	369D290011	X	X		X	X
Dual–starting kit	M30306	X				
FWD battery	369D222505		X			
13AH ni–cad battery	369D24296		X			
97 – AVIONICS						
Transponder, Mode S (KT–70)	600N96509					X
Transponder (KT–76A)	369H90073	X				
Transponder (King KT–76A)	369D24163		X	X		
Transponder (Collins TDR–950)	369H90009	X				
Transponder (Collins TDR–950)	369D24166		X	X		
Transponder, Mode A/C (KT–76A)	600N96511					X
GPS International (KLN 90B)	600N96507					X
NAV/COM (Collins)	369H90007	X				
NAV/COM transceiver (KX–170A)	369H90071	X				
NAV/COM transceiver (KX155)	369D24147		X	X		
NAV/COM transceiver (KX155)	600N96512					X
NAV/COM transceiver (King KX–1756)	369D24162		X	X		
NAV/COM (Collins VHF–251 and VIR–351)	369D24164		X	X		
Transceiver (VHF–22B)	369D24322		X			

Table 202. Optional Equipment List (Cont)

Nomenclature	Part Number	369D	369E	369FF	500N	600N
Comm. receiver (Bendix/King KY–196)	369D24167		X	X		
Comm. receiver (KY196A–30)	600N96513					X
ADF (Collins RCR–650)	369H90008	X				
ADF (King KR–87)	369D24161		X	X		
ADF (Collins 60A)	369D24333		X			
ICS system	369H90068	X				
ICS system	369D24118		X	X	X	X
NAT AA82/AA83 stereo ICS	600N96505					X
Copilot foot switch	600N96526					X
Rear seat transmit switch	600N96527					X
Radio (ASB/125/60)	369H90144	X				
Headset, microphone assembly	369H92042	X	X	X	X	
Switch and jack assembly, intercom	369H92492	X	X	X	X	
Headset microphone	H10–56	X	X	X	X	
Harness assembly (VHF–22B)	369D24321		X			
Instrument and electrical (R/H command)	369D24175				X	
Sterio audio control	600N96529					X
Audio control panel (KMA24–H)	600N96514					X
Middle seat wire harness	600N96515					X
Collective Hobbs	600N96525					X

This Page Intentionally Left Blank

UK CAA ALS SUPPLEMENT

1. UK CAA Airworthiness Limitations Section Supplement

NOTE:

- The following components are further limited when helicopters are operating under UK CAA TC.
- Refer to 04-00-00 for all other Component Mandatory Replacement Times and Component Mandatory Inspections.

Airworthiness Limitations
Component Mandatory Replacement Schedule

Component (1)	Part Number (2)	Finite Life Hours (RIN) (1)	Mandatory Inspection Hours
Main Rotor System			
Drive shaft, main rotor	600N5510	14000 (1,000,000) (3)	
Tailboom			
Tailboom assembly	600N3500–503	800 (4)	

NOTES:

(1) Life–limited components interchanged between models or configurations must be restricted to the lowest service life indicated for the models or configurations affected. Life–limited components removed at retirement are to be destroyed or conspicuously marked to prevent inadvertent return to service. Parts are applicable only on models under which a service life is listed.

(2) Service life shown for the basic (no dash number) part numbers apply to all dash numbered versions unless otherwise indicated.

(3) RIN = (50xHrs.) + (3xTE)

(4) The 600N3500–503 tailboom may be reworked to a 600N3500–505 tailboom by modifying the attachment fittings to all steel fittings.

REVISION:	DATE	FAA SIGNATURE AND DATE *
Initial Issue:	24 May 2000	5/8/00

* FAA approval in behalf of UK CAA per letter, Winnert to Wang, Ref. 9/33/0649/A26479, Dated 2 May 2000.

This Page Intentionally Left Blank

CONTINUED AIRWORTHINESS YEARLY INSPECTION CHECKLIST

1. Yearly Inspection

This check sheet is designed to be used when performing special inspections as defined under FAR Part 91. This checklist, when completed, should be kept as a permanent part of the helicopter's records. Adherence to Maintenance Manual information is required, and the manual should be consulted when using the checklist.

NOTE:

- The Chap/Sect column of the following table is for reference unless a specific inspection requirement is called out. If there is only two numbers in the column, it refers to the Chapter. If there is three numbers, it refers to the Section the inspection is found.
- Refer to applicable Allison engine inspection check list for required engine maintenance.

Table 1. Yearly Inspection

Registration No._____ Serial No._____ Helicopter Hours_____			
Model	**Requirement**	**Chap/Sect**	**Initial**
1 YEAR			
	EXTERIOR		
ALL	Perform Pitot Static System Inspection.	95–10–00	
ALL	Check outside air temperature probe for security and obvious damage.	95	
ALL	Particle separator for condition and servicing.	71	
NOTE: If equipped with a Donaldson Particle Separator, ensure O–rings for rubber boot are not deteriorated (Ref. Donaldson Particle Separator Inspection).		71–10–10	
ALL	Perform engine air inlet Air Pressure Sensing Switch Calibration Check.	71–10–10 71–10–60	
	LANDING GEAR		
369D/E/FF 500N	Perform Landing Gear Strut Inspection.	32–10–00	
	CABIN		
ALL	* First aid kit contents and security of attachment. * Fire extinguisher for charge pressure and security of attachment.	25 26	
ALL	* Inspect seats, interior trim, panels and covers for damage and security. * Inspect seat base structure for evidence of deformation.	25	
ALL	* Perform Tank Vent System Inspection.	28–00–00 28–00–60	
369D/E/FF 500N	Inspect fuel vent system rollover valve for condition and operation (Ref. Tank Vent System Inspection).	28–00–00	
NOTE: The 369H8108–505, 369H8108M, 369H8108–501M,–503M and 369D28108–1 rollover valves do not require a yearly inspection.			

Table 1. Yearly Inspection (Cont.)

Registration No._____ Serial No._____ Helicopter Hours_____			
Model	**Requirement**	**Chap/Sect**	**Initial**
ALL	* Actuate and visually inspect fuel shutoff valve for proper operation. * Inspect fuel cell sending unit for electrical terminals and wiring for security and condition. * Inspect wiring harness between sending unit and instrument cluster. * Check **FUEL LEVEL LOW** caution light for proper operation (Ref. Fuel Level Low Caution Light System Test).	28–00–00 28–00–60	
600N	Aircraft **WITHOUT** airframe fuel filter option: * Perform Fuel Transfer System Functional Check.	28–00–60	
ALL	Inspect instrument plumbing and electrical wiring for chafing, damage and security.	95 96	
NOTE: In the following inspection, do not pull on torque or oil pressure lines.			
369D/E/FF 500N	Inspect torque and oil pressure lines from the firewall forward to the instruments for seepage, chafing, cracking, damage and security.	95	
ANTI–TORQUE			
500/600N	Drain fan transmission. Flush with sufficient new oil to remove sludge accumulation. Refill with new oil.	12	
369D/E/FF	Drain tail rotor transmission. Flush with sufficient new oil to remove sludge accumulation. Refill with new oil.	12	
FLIGHT CONTROLS			
500/600N	Inspect forward thruster cable at Sta. 123.30 for crack in relieved area between threads and swage. Inspect the conduit cap of the telescopic swivel end for crack, corrosion and obvious damage to the cable swage area or evidence of ball separation.	67	
500N	Inspect center thruster cable at Sta. 264.00 for crack in relieved area between threads and swage. Inspect the conduit cap of the telescopic swivel end for crack, corrosion and obvious damage to the cable swage area or evidence of ball separation.	67	
600N	Inspect center thruster cable at Sta. 292.00 for crack in relieved area between threads and swage. Inspect the conduit cap of the telescopic swivel end for crack, corrosion and obvious damage to the cable swage area or evidence of ball separation.	67	
ELECTRICAL			
NOTE: When possible, use auxiliary power source, not battery, during **POWER ON** inspection.			
ALL	Check wiring from battery connector to warning lights for continuity, use an ohmmeter.	96	
ENGINE COMPARTMENT			
ALL	Inspect firewall insulator panels for security and obvious damage.	53	
ALL	Inspect overrunning clutch firewall seal and engine compressor firewall (plenum chamber) seal for proper sealing and good condition.	63 71	

Table 1. Yearly Inspection (Cont.)

Registration No._____ Serial No._____ Helicopter Hours_____			
Model	**Requirement**	**Chap/Sect**	**Initial**
4 YEARS			
NOTE: Shelf life of bearings preserved with grease is limited to 4 years. For this reason, it is of extreme importance that bearings carry the date of last lubrication or preservation and inspection. After 2 years of shelf life, it is advisable to relubricate bearings upon installation.			
ALL	Clean, inspect and relubricate (repack) main rotor swashplate bearings that have been in storage.	COM	
500/600N	Clean, inspect and relubricate (repack) fan support and pitch plate bearings that have been in storage.	64	
369D/E/FF	Clean, inspect and relubricate (repack) tail rotor swashplate (duplex) bearings that have been in storage.	64	

This Page Intentionally Left Blank

CONTINUED AIRWORTHINESS

SPECIAL INSPECTIONS

1. Special Inspection Hourly and Calendar

This table is a schedule of time-phase inspections that are contingent upon elapsed flight time or calendar time. These inspections require a Log Book entry. Adherence to Maintenance Manual information is required, and the manual should be consulted when using this checklist.

NOTE:

- The Chap/Sect column of the following table is for reference unless a specific inspection requirement is called out. If there is only two numbers in the column, it refers to the Chapter. If there is three numbers, it refers to the Section the inspection is found.
- Refer to applicable Rolls-Royce engine inspection check list for required engine maintenance.

Table 1. Special Inspections Hourly

Model	What to Inspect	Chap/Sect
AFTER INSTALLATION OF NEW 369F5100 MAIN ROTOR TRANSMISSION		
ALL	Perform transmission run-in (Ref. Main Transmission Run-In Procedure)	63-20-25
2 - 10 HOURS AFTER INSTALLATION OF TAIL ROTOR TRANSMISSION		
369D/E/FF	Using drag torque previously recorded, apply a torque load of **75 - 95 inch-pounds (8.47 - 10.73 Nm) plus the noted drag torque** (noted for each individual nut) to each mounting nut of the transmission (Ref. Tail Rotor Transmission Installation).	63-25-10
EVERY 10 HOURS or BEFORE FIRST FLIGHT OF EVERY DAY		
600N	Effectivity: RN003-RN059 (Ref. SB600N-039), Perform Tailboom Attach Fitting Inspection (Ref. EAD 2001-24-51) (Not required if TB600N-007R1 has been accomplished).	53-30-30
EVERY 15 HOURS		
369D/E/FF	Effectivity: 369H1203-BSC or 369H1203-21 lead-lag link assemblies with at least 500 hours, perform Main Rotor Blade Upper and Lower Root Fitting Attach Lug and Lead-Lag Link Attach Lug Inspection (25 Hour) and every 100 hours in accordance with Main Rotor Blade Upper and Lower Root Fitting Attach Lug and Lead-Lag Link Attach Lug Inspection (100 Hour) until retirement of 369H1203-BSC or-21 Lead-Lag Link Assembly. (Reference AD 95-03-13).	62-10-00
25 HOURS AFTER REPLACING TAIL ROTOR DRIVE FORK HINGE BOLT		
369D/E/FF	Check rotational torque of bolt by applying **125 inch-pounds (14.12 Nm)** with torque wrench. If 125 inch-pounds (14.12 Nm) torque does not rotate bolt, preload is correct (Ref. COM, Hub and Fork Assembly).	64-20-10 64-20-20
25 HOURS AFTER INSTALLATION OF OIL COOLER BLOWER		
ALL	With two pounds of force applied, check belt tension for 0.17 to 0.20 inch (4.32 - 5.08 mm) deflection. Check pulley (Ref. Cooling Blower Belt Tension Check and Adjustment). Check oil cooler blower driven pulley retaining nut for minimum torque of **160 inch-pounds (18.08 Nm)**. If loss of torque is noted, remove pulley nut and inspect pulley shaft and splines for condition. Reinstall nut and torque to **160 - 190 inch-pounds (18.08 - 21.47 Nm) plus drag torque**.	63

Table 1. Special Inspections Hourly (Cont.)

Model	What to Inspect	Chap/Sect
EVERY 25 HOURS WITH 2 FAILED LAMINATES IN MAIN ROTOR STRAP ASSEMBLY		
369D/E/FF 500N	Inspect in accordance with Main Rotor Strap Pack Lamination Inspection at 25–hour intervals if 2 laminates have failed in any one leg or tongue area of any strap assembly. A single cracked laminate between the shoes at the outboard end of a strap pack is cause for rejection of the hub assembly (Ref. Main Rotor Strap Pack Lamination Inspection).	62–20–00
EVERY 25 HOURS WITH 1 FAILED LAMINATES IN MAIN ROTOR STRAP ASSEMBLY		
600N	Inspect in accordance with Main Rotor Strap Pack Lamination Inspection at 25–hour intervals if 1 laminate has failed in any one leg or tongue area of any strap assembly. A single cracked laminate between the shoes at the outboard end of a strap pack is cause for rejection of the hub assembly (Ref. Main Rotor Strap Pack Lamination Inspection).	62–20–60
EVERY 25 HOURS		
NOTE: This inspection does not apply to 369D21100–516, –517, –523 and 369D21102–503, –517, –523 main rotor blades or the 369H1203–51 and –61 lead–lag links.		
369D/E/FF	Visually inspect exposed portion of all installed main rotor blade upper and lower root fitting attach lugs and main rotor hub lead–lag link attach lugs for broken or cracked lugs, corrosion or other damage to the lug areas (Ref. Main Rotor Blade Upper and Lower Root Fitting Attach Lug and Lead–Lag Link Attach Lug Inspection (25–Hour)).	62–10–00
EVERY 50 HOURS		
369D/E/FF 500N	Effectivity: On models equipped with Rotorcraft Litter Kit: visually inspect litter doors for condition and security of quick–release fasteners. Rubber gasket between window glass and door for proper sealing.	CSP–026
EVERY 50 HOURS IF CRACKS ARE FOUND IN FAN LINER		
NOTE: If cracks protrude into Felt Metal Seal, replace seal.		
500/600N	Inspect fan liner to ensure cracks do not protrude into Felt Metal Seal (Ref. Anti–Torque Fan Liner (Felt Metal Seal) Inspection).	64–25–30
EVERY 100 HOURS		
ALL	If installed, floats and associated components for condition and security.	32
ALL	Effectivity: With 369F5450–501 overrunning clutch installed, remove clutch assembly and inspect clutch retainer, bearing carrier and housing at pin and shoulder for evidence of spinning and/or wear. If spinning and/or wear is observed, replace clutch assembly.	63
EVERY 300 HOURS		
600N	Replace tailboom attach bolts with new bolts, scrap removed bolts (Ref. Tailboom Installation). Inspect radius blocks and tailboom attach points for corrosion and cracks (Ref Tailboom Inspection).	53–40–30
EVERY 300 HOURS OR ONE YEAR (Whichever occurs first)		
ALL	Effectivity: For 369D25100 main transmission serviced with MIL–L–23699 oil, drain main transmission oil system; Flush with sufficient new oil to remove sludge accumulation. Replace filter and refill with new oil.	12

Table 1. Special Inspections Hourly (Cont.)

Model	What to Inspect	Chap/Sect
500/600N	Effectivity: Forward and center cable couplings; Using a bright light and 10X magnifying glass, inspect inner coupling male and female connectors for corrosion pitting or cracks; none allowed.	67–20–30
EVERY 300 HOURS OR TWO YEARS (Whichever occurs first)		
600N	Main rotor upper thrust bearing assembly must be relubricated every 2 years or 300 hours, whichever occurs first (Ref. Main Rotor Hub Upper Bearing Grease Repack, Inspection and Replacement).	62–20–60
EVERY 300 HOURS		
ALL	Effectivity: 369D21400–503 (369D/E/FF – 500/600N) or M50452 (369D/E/FF – 500N) lead–lag dampers with at least 4200 hours, inspect for deterioration until deterioration is sufficient to retire assembly (Ref. Main Rotor Damper and Attachments Inspection and Main Rotor Damper Weight Loading and Extension Check).	62–20–00 62–20–60
NOTE: The following inspection does not apply to 369D25100–505 and –507 transmissions.		
369D/E/FF	Visually inspect upper surface of main transmission output shaft assembly (ring gear carrier) for bulging or raised surfaces. Using 10X magnifying glass, inspect upper surface of shaft for cracks. (Ref. COM, Output Drive Shaft Visual Inspection)	63–20–00
369D/E 500/600N	Replace anti–ice/airframe fuel filter element (if installed) (Ref. Anti–Ice Fuel Filter Replacement).	28–25–00
ALL	Mist eliminator and access door for proper installation (attaching hardware for security).	71
ALL	Hoist installation (if installed) for condition and security.	25
EVERY 600 HOURS OR ONE YEAR (Whichever occurs first)		
ALL	Effectivity: 369D25100 main transmission serviced with Mobil SHC 626 oil and 369F5100 main transmission, drain main transmission oil system; Flush with sufficient new oil to remove sludge accumulation. Replace filter and refill with new oil.	12
369D/E/FF 500N	Effectivity: 369F5510 Main Rotor Drive Shaft, perform 369F5510 Main Rotor Drive Shaft Inspection (Ref. 600N5510 and 369F5510 Main Rotor Drive Shaft Inspection).	63–10–00
600N	Effectivity: 600N5510 Main Rotor Drive Shaft, perform 600N5510 Main Rotor Drive Shaft Inspection (Ref. 600N5510 and 369F5510 Main Rotor Drive Shaft Inspection).	63–10–00
EVERY 600 HOURS		
ALL	Cyclic control system for excessive slack or free play. Cyclic control stick, at grip, for play in excess of 3/8 inch (9.53 mm) (Ref. Main Rotor Flight Control System 600–Hour Inspection).	67–10–00
ALL	Effectivity: 369D21400–503 (369D/E/FF – 500/600N) or M50452 (369D/E/FF – 500N) lead–lag dampers with less than 4200 hours, inspect for deterioration until deterioration is sufficient to retire assembly (Ref. Main Rotor Damper and Attachments Inspection and Main Rotor Damper Weight Loading and Extension Check).	62–20–00 62–20–60
500/600N	Using a dial indicator, measure the rotation of the fan pitch control clevis mounted on the fan pitch control tube. If clevis rotation is more than 0.025 in. (0.635 mm), inspect splines on fan pitch control tube (Ref. Fan Pitch Control Tube Inspection) and splines in tube support (Ref. Tube Support Inspection).	63–25–30 67–20–30

Table 1. Special Inspections Hourly (Cont.)

Model	What to Inspect	Chap/Sect
EVERY 1200 HOURS		
ALL	Test battery over temperature sensor unit for proper operation and accuracy (Ref. Battery Temperature Sensing Equipment Operational Check).	96–05–00
500/600N	Perform visual inspection, using a 10x magnifying glass, on horizontal stabilizer mounting brackets (pay particular attention to the forward inboard legs).	53
500N	Regrease YSAS actuator (Ref. YSAS Actuator Regrease Procedure).	67–20–30
600N	Perform Forward Upper Longeron Inspection (L153, R153).	53–30–30
EVERY 1200 HOURS OR 2 YEARS (WHICHEVER OCCURS FIRST)		
500/600N	Clean, inspect and relubricate (repack) fan support and pitch plate bearings (Ref. Anti–Torque Fan Bearing Regreasing).	64–25–30
500/600N	Perform Anti–Torque Fan Inspection.	64–25–30
500/600N	Check pitch bearing retainer for cracks or damage.	64
EVERY 2700 HOURS OR 2 YEARS (WHICHEVER OCCURS FIRST)		
600N	Main rotor lower thrust bearing assembly must be relubricated every 2 years or 2700 hours, whichever occurs first.	62–20–60
600N	Clean, inspect and relubricate (repack) main rotor swashplate bearings.	62–30–60
EVERY 2770 HOURS OR 2 YEARS (WHICHEVER OCCURS FIRST)		
369D/E/FF 500N	Clean, inspect and relubricate (repack) main rotor swashplate bearings and main rotor hub tapered bearings (Ref. Main Rotor Hub Tapered Bearing Replacement).	62–20–00
369D/E/FF	Clean, inspect and relubricate (repack) tail rotor swashplate bearings (Ref. Tail Rotor Swashplate Bearing Regreasing).	64–30–00
EVERY 6,000 HOURS		
DELETED		
AT 6000 HOURS AND EVERY 100 HOURS THEREAFTER		
600N	Remove tunnel control boot. Inspect interface between 369H2564 tunnel beams and 369D22508–7 web for cracks (Ref. Control Tunnel (FS 78.50) Beam Inspection).	53–30–30
600N	Effectivity: (RN003–RN077 with TB600N–007 completed, and RN078 and subs) Perform Forward Upper Longeron Inspection (L137, R137).	53–30–30
AT 15,000 HOURS AND EVERY 1500 HOURS THEREAFTER		
600N	Effectivity: (RN003–RN077 with TB600N–007 completed, and RN078 and subs) Perform Lower Longeron Inspection (L158, R158).	53–30–30

TABLE OF CONTENTS

Para/Figure/Table	Title	Page
07-00-00	**Lifting and Jacking**	**A**
	Maintenance Practices	**201**
1.	Component Weights for Hoisting	201
	Table 201. Approximate Maximum Hoisting Weights of Components – 369D/E	201
	Table 202. Approximate Maximum Hoisting Weights of Components – 369FF	201
	Table 203. Approximate Maximum Hoisting Weights of Components – 500N	201
	Table 204. Approximate Maximum Hoisting Weights of Components – 600N	201
2.	Helicopter Hoisting	201
3.	Helicopter Sling Lifting	202
	A. Helicopter Preparations	202
	B. Helicopter Lifting	202
	C. Helicopter Landing	202
4.	Helicopter Jacking	203
	Figure 201. Hoisting and Jacking Helicopter (Sheet 1 of 3)	204

TABLE OF CONTENTS (Cont.)

Para/Figure/Table	Title	Page

This Page Intentionally Left Blank

TABLE OF CONTENTS

Para/Figure/Table	Title	Page
08-00-00	**Leveling**	**A**
	Maintenance Practices	**201**
1.	Helicopter Leveling	201
	Figure 201. Leveling Helicopter (Sheet 1 of 2)	202
08-10-00	**Weight and Balance**	**A**
	Maintenance Practices	**201**
1.	General Weight and Balance Information	201
	A. Approved Center of Gravity Limits	201
	B. Terminology	201
2.	Helicopter Weighing	202
	A. Helicopter Weighing Preparation	202
	B. Preparation for Weighing – Electronic Method	203
	C. Helicopter Weighing – Electronic Method	204
	D. Preparation for Weighing – Mechanical Scales Method (369D/E/FF – 500N Only)	204
	E. Weighing Procedures – Mechanical Scales Method (369D/E/FF – 500N Only)	205
	F. Longitudinal CG Determination for Unadjusted Net Weight (369D/E/FF – 500N Only)	205
	G. Lateral CG Determination for Unadjusted Net Weight	205
	H. Basic Weight and CG Determination	206
	Figure 201. Balance Diagram – Model 369D	207
	Figure 202. Balance Diagram – Model 369E	208
	Figure 203. Balance Diagram – Model 369FF	209
	Figure 204. Balance Diagram – Model 500N	210
	Figure 205. Balance Diagram – Model 600N	211
	Figure 206. Weight and Balance Report Form (Sheet 1 of 2)	212
	Figure 207. Surplus and Missing Items Report	214
	Figure 208. Basic Weight and Balance Record	215
	Figure 209. Example 1 (Sheet 1 of 2)	216

TABLE OF CONTENTS (Cont.)

Para/Figure/Table	Title	Page

This Page Intentionally Left Blank

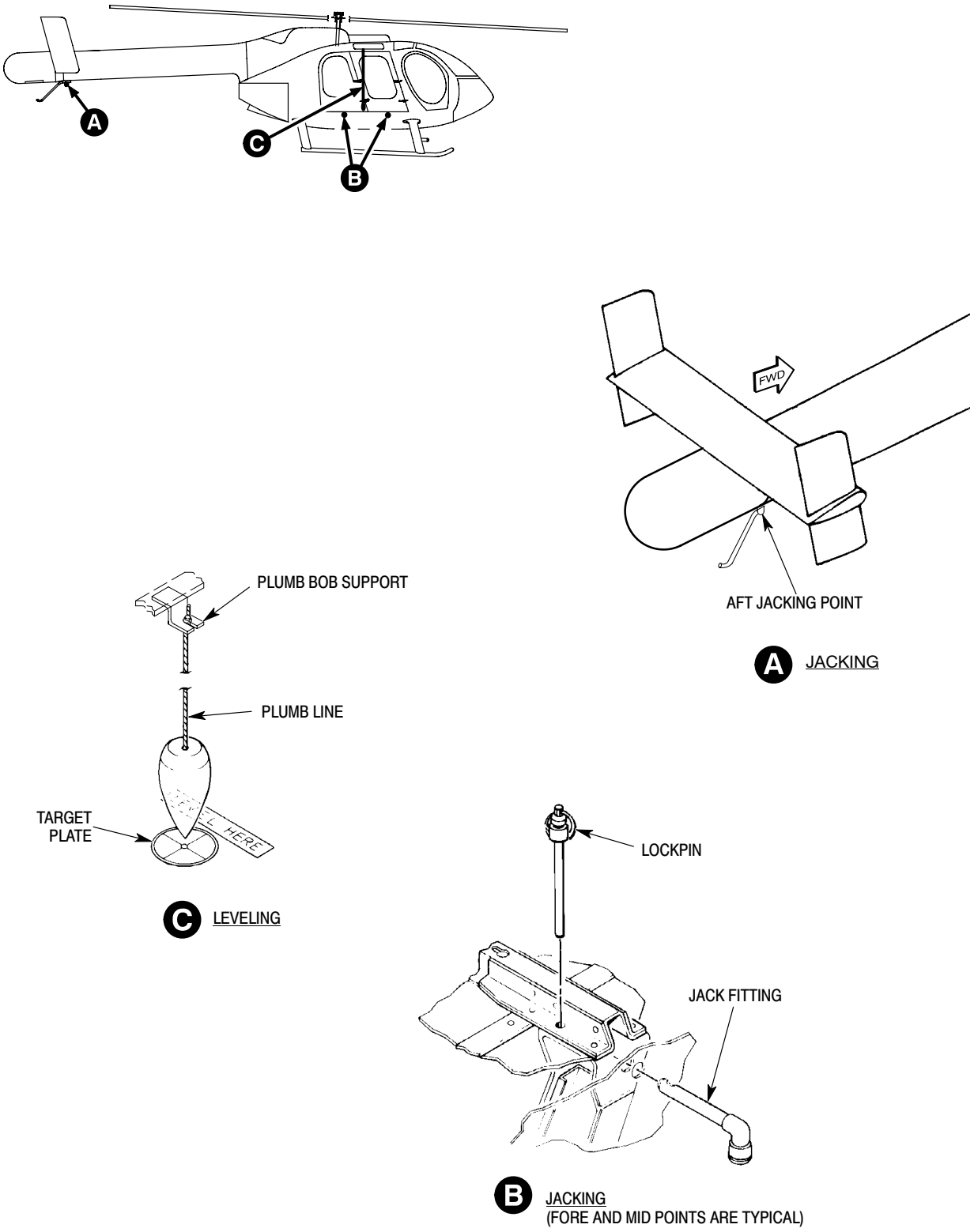

Figure 201. Leveling Helicopter (Sheet 2 of 2)

This Page Intentionally Left Blank

Determining total unadjusted net weight, longitudinal and lateral CG - 600N

Weighing Points	(a) Scale Reading (lbs.)	(b) Tare or Calibration Correction (lbs.)	(c) Net Weight (lbs.)	Longitudinal Arm (inches)	Lateral Arm (inches)	(d) Longitudinal Moment (inch-lbs.)	(g) Lateral Moment (inch-lbs.)
Left Main	919.2	0.0	919.2	96.9	-26.0	89070	-23899
Right Main	885.4	0.0	885.4	96.9	+26.0	85795	23020
Tail	104.7	0.0	104.7	303.3	0	31756	0
Total Unadjusted Net Weight			1909.3	108.2 **(f)**	-.5 **(i)**	206621 **(e)**	-879 **(h)**

Determining basic weight and the longitudinal and lateral CG - 500MD

Weighing Points	Scale Reading (lbs)	Tare or Calibration Correction (lbs)	Net Weight (lbs)	Arm (in.)	Moment (in.-lb)
Left Main	648.9	- 1.5	647.4	96.9	62733
Right Main	618.9	+ 0.5	619.4	96.9	60020
Tail	195.9	0	195.9	197.2	38631
Total Unadjusted Net Weight			1462.7	110.3	161384
Total Weight of Missing Equipment (Ref. Figure 207)			+ 21.0	93.6	+ 1966
Total Weight of Surplus Equipment (Ref. Figure 207)			- 1.3	96.9	- 126
Total Basic Weight			1482.4	110.1	163224

Determining basic weight and the longitudinal and lateral CG - 600N

Weighing Points	Scale Reading (lbs.)	Tare or Calibration Correction (lbs.)	Net Weight (lbs.)	Longitudinal Arm (inches)	Lateral Arm (inches)	Longitudinal Moment (inch-lbs.)	Lateral Moment (inch-lbs.)
Left Main	919.2	0.0	919.2	96.9	-26.0	89070	-23899
Right Main	885.4	0.0	885.4	96.9	+26.0	85795	23020
Tail	104.7	0.0	104.7	303.3	0	31756	0
Total Unadjusted Net Weight			1909.3	108.2	-.5	206621	-879
Total Weight of Missing Equipment (Ref. Figure 207)			+15.9	97.4	0	1549	0
Total Weight of Surplus Equipment (Ref. Figure 207)			-1.3	96.9	0	-126	0
Total Basic Weight			1923.9	108.1	-.5	208044	-879

Figure 209. Example 1 (Sheet 2 of 2)

This Page Intentionally Left Blank

TABLE OF CONTENTS

Para/Figure/Table	Title	Page
09-00-00	**Towing**	**A**
	Maintenance Practices	**201**
1.	Ground Handling Wheels	201
	A. Standard Ground Handling Wheels	201
	B. Special Ground Handling Wheels (Float-Equipped Helicopters, 369D/E/FF - 500N)	201
2.	Helicopter Towing and Manual Moving (369D/E/FF - 500N)	201
3.	Helicopter Manual Moving (600N)	201
4.	Helicopter Towing (600N)	202
	Figure 201. Towing Helicopter (369D/E/FF - 500N)	203
	Figure 202. Towing Helicopter (600N)	204

TABLE OF CONTENTS (Cont.)

Para/Figure/Table	Title	Page

This Page Intentionally Left Blank

TABLE OF CONTENTS

Para/Figure/Table	Title	Page
10-10-00	**Parking and Mooring**	**A**
	Maintenance Practices	**201**
1.	Helicopter Parking	201
2.	Helicopter Mooring	201
	Figure 201. Parking and Mooring (Sheet 1 of 2)	203
10-20-00	**Storage**	**A**
	Maintenance Practices	**201**
1.	Preservation and Storage	201
2.	Flyable Storage (No Time Limit)	201
	A. Inspection Before Storage	201
	B. Storage	201
	C. Return to Service	201
3.	Storage Up to 45 Days	201
	A. Inspection During Storage	201
	B. Storage	201
	C. Return to Service	202
4.	Storage Up to 6 Months	202
	A. Inspection During Storage	202
	B. Storage	202
	C. Return to Service	203
10-30-00	**Blade Folding**	**A**
	Maintenance Practices	**201**
1.	Main Rotor Blades Storage Rack Description	201
2.	Main Rotor Blades Storage Rack Inspection	201
3.	Main Rotor Blades Folding and Unfolding	201
	A. Helicopter Location for Blade Folding	201
	B. Main Rotor Blades Folddown Preparation	201
	C. Aft Main Rotor Blades Folding	202
	D. Forward Main Rotor Blades Folding	203
	Figure 201. Folding and Stowing Main Rotor Blades	204
	E. Main Rotor Blades Unfolding Preparation	205
	F. Aft Main Rotor Blades Unfolding	205
	G. Forward Main Rotor Blades Unfolding	206
	H. Main Rotor Blades Storage Rack Removal and Storage	206
4.	Main Rotor Flight Controls Adjustment and Testing	206

TABLE OF CONTENTS (Cont.)

Para/Figure/Table	Title	Page

This Page Intentionally Left Blank

TABLE OF CONTENTS

Para/Figure/Table	Title	Page
11-00-00	**Placards and Markings**	**A**
	Maintenance Practices	**201**
1.	General	201
2.	Decal Application	201
	Figure 201. Placards – Exterior (Sheet 1 of 5)	202
	Figure 202. Placards – Interior (Sheet 1 of 5)	207
	Figure 203. Placards – Instrument Panels (Sheet 1 of 2)	212
	Figure 204. Placards – Optional Equipment (Sheet 1 of 4)	214
11-40-00	**Placards and Markings (600N)**	**A**
	Maintenance Practices	**201**
1.	General	201
2.	Decal Application	201
	Figure 201. Exterior Placards and Markings (Sheet 1 of 4)	202
	Figure 202. Interior Placards and Markings (Sheet 1 of 4)	206
	Figure 203. Instrument Panel Placards and Markings (Sheet 1 of 2)	210

TABLE OF CONTENTS (Cont.)

Para/Figure/Table	Title	Page

This Page Intentionally Left Blank

TABLE OF CONTENTS (Cont.)

Para/Figure/Table	Title	Page
	A. Balance at Blade Tip	201
	B. Balance at Blade Pitch Arm	201
	C. Short Method Balance Check	202
	D. Long Method Balance Check (Four-Bladed Tail Rotor)	202
2.	Horizontal Stabilizer Tuning	203
	Figure 201. Tail Rotor Assembly Balancing (Two-Bladed Tail Rotor)	204
	Table 201. Tail Rotor Balance Weight - Value Chart	205
	Figure 202. Short Method Tail Rotor Balancing (Four-Bladed Tail Rotor)	205
	Figure 203. Long Method Tail Rotor Balancing (Inboard Blade)	206
	Figure 204. Long Method Tail Rotor Balancing (Outboard Blade)	206
18-20-30	**NOTARr Anti-Torque System Fan Balance**	**A**
Maintenance Practices		**201**
1.	Fan Balancing	201
2.	Fan Balance Check	201
	Table 201. Preferred Hardware for Balancing Fan Assembly	202
	Figure 201. Fan Balancing Stud Numbering	203
	Figure 202. Fan Balance Chart	204
	Figure 203. Fan Balancing Equipment Installation	205

TABLE OF CONTENTS (Cont.)

Para/Figure/Table	Title	Page

This Page Intentionally Left Blank

TABLE OF CONTENTS (Cont.)

Para/Figure/Table	Title	Page
	Figure 201. Hoist System Components (Sheet 1 of 3)	202
2.	Preparation for Hoisting Operations	205
	Figure 202. Winch Cable, Cable Cutter, and Swivel Hook Replacement (Sheet 1 of 2)	206
3.	Hoist System Troubleshooting	208
4.	Cyclic Stick Grip and Cyclic Stick Cable Cutter Switch (S600) Replacement	208
5.	Hoist Assembly Replacement	208
A.	Hoist Assembly Removal	208
B.	Hoist Assembly Installation	208
	Figure 203. Passenger/Cargo Door Retainer Installation	209
6.	Winch Components Replacement	210
A.	Winch Cable Replacement	210
B.	Swivel Hook Replacement	211
C.	Cable Cutter Replacement (Guillotine-Type)	212
7.	Hoist System Operational Check	212
8.	Hoist Equipment Inspection	213
	Table 201. Troubleshooting Hoist System	214
	Figure 204. Wiring Diagram - Hoist System (L/H Command)	214
	Figure 205. Wiring Diagram - Hoist System (R/H Command)	215
	Figure 206. Schematic Diagram - Hoist System Winch	216
Initial Installation		**901**
1.	Hoist Passenger/Cargo Initial Installation	901
A.	Preparation for Installation	901
B.	Helicopter Equipment Removal	901
C.	Helicopter Modification	901
D.	Electrical Equipment Installation (L/H Command)	902
	Figure 901. Helicopter Modification	903
E.	Electrical Equipment Installation (R/H Command)	904
F.	Passenger/Cargo Door Retainer Installation	906
	Figure 902. Passenger/Cargo Door Retainer Tube Installation	907
G.	Hoist Assembly	908
H.	Hoist Installation	908
I.	Helicopter Equipment Installation	909
J.	Weight and Balance Data	909
	Table 901. Weight and Balance Data	909
	Figure 903. Cable Antichafing Bar Installation	910

TABLE OF CONTENTS (Cont.)

Para/Figure/Table	Title	Page

This Page Intentionally Left Blank

TABLE OF CONTENTS

Para/Figure/Table	Title	Page
26-10-00	**Engine Fire Detection System**	**A**
	Maintenance Practices	**201**
1.	Fire Detector System Description and Operation	201
2.	Fire Detector System Troubleshooting	201
3.	Fire Detection System Replacement	201
	A. Fire Detection System Removal	201
	B. Fire Detection System Installation	201
	Figure 201. Fire Detection System Interconnect Data	202
	Figure 202. Fire Detection System Installation	203
26-20-00	**Fire Extinguisher**	**A**
	Maintenance Practices	**201**
1.	Fire Extinguisher Description	201
2.	Fire Extinguisher Operation	201
3.	Fire Extinguisher Servicing/Inspection	201
	Figure 201. Fire Extinguisher Installation (R/H Command)	202

TABLE OF CONTENTS (Cont.)

Para/Figure/Table	Title	Page

This Page Intentionally Left Blank

TABLE OF CONTENTS (Cont.)

Para/Figure/Table	Title	Page
	Figure 404. Ejector Pump and Fuel Lines Installation	409
5.	Fuel Cell Vent System Components Replacement	410
	A. Fuel Cell Vent System Components Removal	410
	B. Fuel Cell Vent System Components Installation	410
	Figure 405. Fuel Cell Vent System Components	411
6.	Fuel Cell Replacement	412
	A. Fuel Cell Removal	412
	B. Fuel Cell Installation	414
	Figure 406. Fuel Cell Interconnect and Support Lacing (Sheet 1 of 3)	416
7.	Fuel Filler Neck Gravity Fill Port Replacement	419
	A. Fuel Filler Neck Gravity Fill Port Removal	419
	B. Fuel Filler Neck Gravity Fill Port Installation	419
8.	Fuel System Drain Valve Replacement	419
	A. Fuel System Drain Valve Removal	419
	B. Fuel System Drain Valve Installation	419
9.	Fuel Quantity Probe Replacement	420
	A. Forward Fuel Quantity Probe Removal	420
	B. Forward Fuel Quantity Probe Installation	420
	C. Aft Fuel Quantity Probe Removal	420
	Figure 407. Fuel Quantity Probes (Sheet 1 of 2)	421
	D. Aft Fuel Quantity Probe Installation	422
Adjustment/Test		**501**
1.	Fuel Level Low Light/Fuel Quantity Indicator System Test and Calibration	501
2.	Fuel Filter (Bypass) Caution Light Pressure Switch Test	502
	Figure 501. Fuel Filter Caution Light Pressure Switch Test Apparatus (C47 Engine)	503
Inspection/Check		**601**
1.	Fuel System General Inspection	601
2.	Fuel Shutoff Valve Inspection	601
3.	Tank Vent System Inspection	602
4.	Fuel Quantity Probe Inspection	602
5.	Fuel System Vacuum Leak Inspection	602
	Figure 601. Fuel System Vacuum Leak Inspection	603
6.	Drain Valve Inspection	603
7.	Fuel Cell Inspection	604
8.	Fuel Cell Leak Inspection	604
	A. Soap Bubble Leak Test Procedures	604

TABLE OF CONTENTS (Cont.)

Para/Figure/Table	Title	Page
	B. Phenolphthalein Stain Inspection Procedures	605
	C. Liquid Stand Inspection	605
9.	Fuel Tank Pressure Leak Test	605
10.	Fuel Transfer System Functional Check	606
	Figure 602. Fuel Transfer System Functional Check	606
	A. Test Setup	607
	Figure 603. Fuel Transfer Test Setup	607
	B. Check Procedures	608
Repairs		**801**
1.	Fuel Shutoff Valve Control Cable Repair	801
2.	Fuel Cell Repair	801
3.	Scuff Mark Repair	801
4.	Reinforcements, Hangers and Splice Repairs	801
5.	Loose Patch Repair	802
6.	Patch Installation	802
7.	Loose Edge and Lap Seam Repairs	803
8.	Blister Repair	804
28-25-00 Anti-Ice / Airframe Fuel Filter (369D/E - 500/600N)		**A**
Description and Operation		**1**
	Table 1. Anti-Ice/Airframe Fuel Filter Effectivity	1
1.	Description	1
2.	Operation	1
Fault Isolation		**101**
1.	Anti-Ice Fuel Filter System Fault Isolation	101
	Table 101. Anti-Ice Fuel Filter System Fault Isolation	101
Maintenance Practices		**201**
1.	Anti-Ice Fuel Filter Replacement	201
	A. Anti-Ice Fuel Filter Removal	201
	B. Anti-Ice Fuel Filter Installation	201
2.	Fuel System Air Bleed	202
	Figure 201. Anti-Ice Fuel Filter (Sheet 1 of 3)	203
Inspection/Check		**601**
1.	Anti-Ice Fuel Filter System Inspection	601
2.	Anti-Ice Fuel Filter Installation Operational Check: 369H90022-BSC	602

TABLE OF CONTENTS (Cont.)

Para/Figure/Table	Title	Page
3.	Anti–Ice Fuel Filter Installation Operational Check: 369H90022–503, –505 and 600N98110–501	602
4.	Fuel System Vacuum Leak Check	602
	Table 601. Fuel Supply System Torque Values	603
	Figure 601. Anti–Ice Fuel Filter Controls (Sheet 1 of 2)	604
Initial Installation		**901**
1.	Anti–Ice Fuel Filter Initial Installation	901
	A. Preparations for Installation	901
	B. Anti–Ice Fuel Filter Control Panel Installation: 369H90022–BSC	901
	C. Anti–Ice Fuel Filter Control Panel Installation: 369H90022–503, and –505	901
	D. Anti–Ice Fuel Filter Control Panel Installation: 600N98110–501	902
	E. Firewall Modifications and Bracket Installation	902
	F. Fuel Filter Installation	903
	Figure 901. Anti–Ice Fuel Filter Modifications and Installation (369D/E – 500N) (Sheet 1 of 2)	904
	Figure 902. Anti–Ice Fuel Filter Modifications and Installation (600N) (Sheet 1 of 2)	907
	Figure 903. Anti–Ice Fuel Filter Wiring Diagram (369D S/N 0001 – 1204) (Sheet 1 of 2)	910
	Figure 904. Anti–Ice Fuel Filter Wiring Diagram (369D S/N 1205 & Subs and 369E S/N 001 – 383)	912
	Figure 905. Anti–Ice Fuel Filter Wiring Diagram (369E S/N 384 & Subs and 500N S/N 001 & Subs)	913
	Figure 906. Anti–Ice Fuel Filter Wiring Diagram (600N S/N 003 & Subs) (Sheet 1 of 2)	914
	G. Post–Installation Inspection	916
	H. Furnishings, Panels and Equipment Installation	916
2.	Anti–Ice Fuel Pump Initial Installation (600N98110–501 Installation)	916
	A. Fuel Cell Cover Removal	916
	Figure 907. Fuel Pump Initial Installation (600N)	917
	B. Pump Installation	917
	C. Fuel Cell Cover Installation	917
3.	Anti–Ice Fuel Filter Installation Weight and Balance	918
	Table 901. Weight and Balance Data	918

TABLE OF CONTENTS (Cont.)

Para/Figure/Table	Title	Page

This Page Intentionally Left Blank

panels from passenger/cargo compartment floor.

(2). Disconnect fuel quantity probe wire harness connector from fuel cell access cover receptacle.

(3). Unclamp and disconnect control cable from fuel shutoff valve.

(4). Unfasten and remove Sta. 91.00 and 102.00 left fuel cell cover support brackets from passenger/cargo floor structure (Ref. Figure 402).

(5). Remove attaching hardware from Sta 102.230 and Sta 113.850 passenger/cargo compartment floor structure that secures engine feed fuel supply hose and motive flow firewall to fuel cell hose to bottom of floor (Ref. Figure 403).

(6). Disconnect engine feed fuel supply hose between fuel shutoff valve and firewall Sta. 124.00 bulkhead union. Using a backup wrench on bulkhead union so it will not rotate, disconnect and remove engine feed fuel supply hose assembly (Ref. Fuel Supply Line Replacement).

(7). Disconnect motive flow fuel hose assembly between fuel cell access cover and Sta 124.00 bulkhead. Using a backup wrench on bulkhead union so it will not rotate, disconnect and remove motive flow fuel hose assembly.

CAUTION Handle fuel cell covers with care. Prying covers from cell openings or rough handling may damage the cover seal or cell fitting.

(8). Unbolt and prop left aft fuel cell access cover open with suitably padded blocks.

(9). Disconnect fuel inlet supply hose between fuel shutoff valve fuel cell access cover and fuel inlet support bracket (Ref. Figure 402 and Figure 404).

(10). Disconnect submerged motive flow fuel hose assembly between fuel check valve fuel cell access cover and ejector pump.

(11). Disconnect submerged fuel cell scavenge hose assembly from bottom of fuel cell access cover bracket assembly to ejector pump (Ref. Figure 404).

(12). Cut safety wire from fuel probe electrical connector base nut and remove connector from fuel cell access cover.

(13). Unbolt and remove right hand fuel cell access cover(s) and bonding jumpers. Remove left hand forward fuel cell access cover.

WARNING **Prevent spontaneous combustion or explosion. Never use oxygen to purge or ventilate fuel tank or fuel system components. Fuel, either vapor or liquid, will violently react with an oxygen rich atmosphere.**

(14). Mop up any remaining fuel in both cells with clean lint free cloth. Purge fuel cells with dry, forced air or inert gas such as nitrogen through filler neck.

(15). Disconnect wire harness from forward and aft fuel quantity probe and remove wire harness (Ref. Fuel Quantity Probe Replacement).

(16). Remove aft fuel quantity probes, fuel inlet with fuel supply hose and bracket assembly, forward fuel quantity probe, ejector pump with submerged motive flow fuel hose assembly and fuel cell scavenge hose as a subassembly (Ref. Figure 404 and Figure 407).

(17). Disconnect and remove fuel vent system components necessary to remove fuel cell (Ref. Fuel Cell Vent System Component Replacement).

NOTE: At this point either cell may be removed, as required.

(18). Remove sump drain valve.

(19). Remove retaining ring and spring from fuel cell interconnect fittings (Ref. Figure 406).

(20). Remove cell suspension cords.

(21). For right fuel cell removal:

(a). Remove fuel filler neck fairing from passenger/cargo compartment floor.

(b). Unclamp fuel gravity filler port from fill valve, remove hose from fill valve and disconnect lanyard.

CAUTION Cells are thin-walled and fragile. Avoid snagging or dragging cell over pointed or sharp edges. Do not scratch or nick any of the cell's metal fittings.

(22). Collapse and fold cell lengthwise and remove through floor access opening.

B. Fuel Cell Installation

(Ref. Figure 406)

Consumable Materials
(Ref. Section 91-00-00)

Item	Nomenclature
CM114	Petrolatum
CM220	Naphtha aliphatic
CM702	Lockwire CRES
CM809	Nylon cord

WARNING **Avoid fuel vapor ignition and fire. Use only nonsparking tools and explosion proof work lights. Attach helicopter to an approved electrical ground. Switch OFF all electrical power. Disconnect external power and battery before opening fuel system. Ensure work area is adequately ventilated.**

NOTE: Discard used O-rings and sealwashers. Apply a thin coat of petrolatum (CM114) to all new O-rings except cell vent system sealwashers.

(1). Air-vacuum all debris from cell bays. Ensure compartment liner will protect cell from airframe points and edges. Repair liner as required.

(2). Bond prep fill valve with fuel cell fitting. Coat O-rings with lubricant (CM114) and install fill valve into right fuel cell with O-ring, spring and retaining ring. Ensure clocking of fill valve with flat at top lines up with shoulder on fuel cell fitting.

(3). Hook up fuel cell interconnect fittings into left fuel cell. Ensure short end of interconnects are facing into left fuel cell. Coat O-rings with lubricant (CM114) and install O-ring, spring and retaining ring.

CAUTION Cells are thin-walled and fragile. Avoid snagging or dragging cell over pointed or sharp edges. Do not scratch or nick any of the cell's metal fittings. Avoid hard contact between cell and fuselage structure when inserting.

(4). Fold cells lengthwise and position in bay through floor opening. Unfold cell and smooth out all creases.

(5). Align cell openings with airframe openings. Hook up fuel cell cross over interconnects into right fuel cell. Coat O-rings with lubricant (CM114) and install O-ring, spring and retaining ring.

(6). Install a new O-ring on sump drain valve. Install valve and torque to **95 - 105 inch-pounds (10.73 - 11.86 Nm)**. Safety wire drain valve with lockwire (CM702).

(7). For right fuel cell installation:

(a). Install rubber hose to fill valve and filler neck, hose should be approximately six an one half inches (16.5 cm) long. Secure hose to fill valve and filler neck with clamps.

(b). Insure lanyard on filler valve is accessible with fill cap removed. Slip lanyard on fuel cap onto ring of fill valve. Install fuel cap.

(c). Connect lanyard of fill valve to gravity filler port. Install hose and clamp.

(8). Connect engine feed fuel supply hose and motive flow fuel hose assembly to Sta. 124.00 bulkhead union (Ref. Fuel Supply Line Replacement).

(9). Install fuel vent system components (Ref. Fuel Vent System Components Replacement).

(10). Route suspension nylon cord (CM809) thru grommet of fuel cell and thru eyelets of fuselage. Tighten and tie cord using a bowline knot. Cut excess cord after knot to approximately 3 to 4 inches (7.6 cm to 10.2 cm) in length.

(11). Secure opposite end of cord using a trucker's slip knot. Cut excess cord after knot to approximately 3 to 4 inches (7.6 cm to 10.2 cm) in length.

(12). Forward fuel probe and ejector pump subassembly installation (Ref. Ejector Pump and Fuel Line Installation):

(a). Bond prep ejector pump bracket assembly with forward fuel probe and ejector pump assembly.

(b). Coat O-rings with lubricant (CM114) and install reducer bushing with O-rings into ejector pump. Torque to **50 - 65 inch-pounds (5.65 - 7.34 Nm)**.

(c). Coat O-rings with lubricant (CM114) and install jamnut, bulkhead elbow to reducer bushing. Torque jamnut to **85 - 105 inch-pounds (9.60 - 11.86 Nm)**.

(d). Install fuel cell scavenge hose to ejector pump. Torque hose nut to **230 - 260 inch-pounds (25.99 - 28.81 Nm).**

(e). Install submerged motive flow fuel hose assembly to elbow and torque to **50 - 65 inch-pounds (5.65 - 7.34 Nm)**.

(f). Bond prep ejector pump in area of clamp up and install forward fuel quantity probe, ejector pump with submerged motive flow hose assembly and fuel cell scavenge hose assembly as a subassembly.

(g). Install ejector pump subassembly to bracket assembly with clamps, bolts and washers. Torque bolts to **36 - 46 inch-pounds (4.06 - 5.19 Nm)**.

(h). Connect wire harness to forward fuel probe. Route submerged motive flow fuel hose assembly, fuel cell scavenge hose assembly and wire harness thru fuel cell fabric retaining loops and baffle (Ref. Fuel Quantity Probe Replacement).

(13). Aft fuel probe and fuel supply inlet hose installation (Ref. Ejector Pump and Fuel Line Installation):

(a). Bond attachment holes on fuel cell aft sump fitting assembly, bracket assembly, aft fuel probe attachment holes and fuel inlet fitting assembly.

(b). Install fuel inlet fitting assembly to bracket assembly with four washers each between fuel inlet fitting and bracket assembly.

(c). Install aft fuel probe to bracket assembly and fuel cell aft sump fitting with bolts and two washers under the head of each bolt, except bolt with ground wire, only one washer is required.

(d). Connect wire harness to aft fuel probe. Attach bonding jumper to outboard bolt of probe. Torque bolts to **36 - 46 inch-pounds (4.06 - 5.19 Nm)** (Ref. Fuel Quantity Probe Replacement).

(14). Install attaching hardware from Sta 102.230 and Sta 113.850 passenger/cargo compartment floor structure that secures engine feed fuel supply hose and motive flow firewall to fuel cell hose to bottom of floor (Ref. Figure 403).

(15). Install right hand fuel cell access covers, left hand forward and left hand aft access cover (Ref. Fuel Cell Cover Replacement).

(16). Connect fuel quantity probe wire harness connector from fuel cell access cover receptacle.

(17). Connect and clamp control cable from fuel shutoff valve (Ref. Fuel Shutoff Valve Control Cable Replacement).

(18). Install forward fuel vent crossover tube cover, right and fuel cell access panels from passenger/cargo compartment floor.

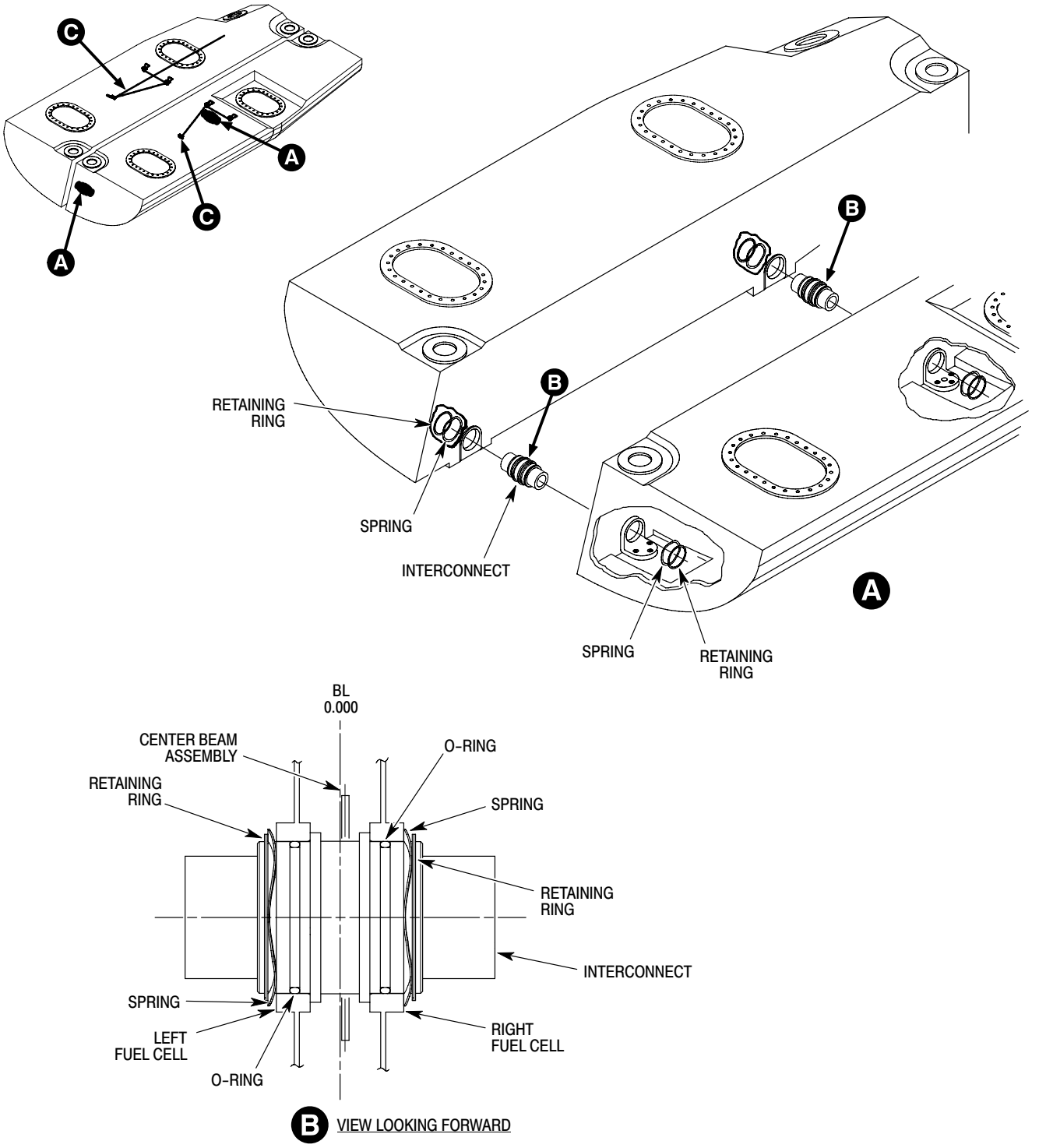

6G28-025-1

Figure 406. Fuel Cell Interconnect and Support Lacing (Sheet 1 of 3)

(4). Unless leak is immediately evident, maintain 1/4 psi (1.7 kPa) pressure for two hours to allow any air trapped in cell exterior laps and seams to escape.

(5). Run soap solution around all patches, lap joints, seams, fittings, creases, abrasions and any other suspicious areas. Bubbles will appear over a leak.

(6). Mark leak areas with a white or yellow crayon.

(7). Repair cell as required.

B. Phenolphthalein Stain Inspection Procedures

(1). Remove cell from helicopter.

(2). Lay cell out on a padded table. Install all but one of the cell closures.

(3). Make phenolphthalein solution as follows:

(a). Add 40 grams phenolphthalein crystals to 1/2 gallon (1.9 L) of denatured alcohol (CM218) and stir.

(b). Add 1/2 gallon (1.9 L) of water. Allow to stand 30 minutes. Stir before using.

(4). Pour commercial ammonia on an absorbent cloth in a ratio of one teaspoon (3 ml) per cubic foot of cell capacity (minimum of 10 ml or 3.3 teaspoons).

(a). Place the ammonia saturated cloth inside the cell and install the remaining cover.

(b). Inflate cell with air to 1/4 psi (1.7 kPa) maximum. Maintain 1/4 psi (1.7 kPa) pressure for 15 minutes minimum, before proceeding.

(c). Soak a large white cloth in the phenolphthalein solution. Thoroughly wring cloth out.

(d). Spread and smooth cloth onto cell. Do not let cloth dry out.

(e). A red spot will appear on the cloth where there is a leak in the cell wall. Mark each leak.

(f). Inspect the entire exterior surface of the cell.

(5). Repair cell as required.

C. Liquid Stand Inspection

(1). Remove cell from helicopter and place on a clean, padded, kraft paper covered table.

(2). Fabricate closure plates for each cell opening.

(a). The object is to completely fill the cell and eliminate all air pockets. Equip one of the plates with liquid filler and vent stand pipes at least six inches (15 cm) tall.

(b). Fill the cell with Stoddard solvent, Stanisol or Varsoline.

(c). Permit cell to stand undisturbed for 24 hours.

(d). Inspect paper to determine where cell is leaking.

(e). Change paper as required. Drain, turn over, refill and let cell stand for another 24 hours to ensure liquid has contacted all cell surfaces.

(f). Repair cell as required.

9. Fuel Tank Pressure Leak Test

Special Tools
(Ref. Section 91-00-00)

Item	Nomenclature
N/A	Manometer

NOTE: Always test and inspect a repaired fuel cell for leaks using soap bubble, phenolphthalein or liquid stand method before installing the cell in the helicopter.

(1). Use the following procedures to check installed fuel tanks and plumbing for leaks.

(a). Plug vent system.

(b). Remove cell floor access panels.

(c). Install manometer and air pressurization equipment.

(d). Apply 2 psi (14 kPa) air pressure for 10 minutes to precondition cells. This forces trapped air from between fuel cells and helicopter structure. If necessary, repeat until cells adjust to contour of cell bay.

(e). Apply 2 psi (14 kPa) air pressure for 15 minutes with no visible, less than 1/4 inch (6.35 mm), drop on manometer. If pressure drop occurs, check all vent plugs, fittings and re-test cells. Repair or replace parts as necessary to eliminate pressure drop.

(f). Unplug vent system. Remove manometer and pressurization equipment.

(g). Install cell floor access panels.

10. Fuel Transfer System Functional Check

NOTE: This check is only done on aircraft **without** the airframe fuel filter option.

(Ref. Figure 602)

Special Tools
(Ref. Section 91-00-00)

Item	Nomenclature
ST803	Fuel Transfer System Functional Tester

WARNING

- **Avoid fuel vapor ignition and fire. Use only nonsparking tools and explosion proof work lights. Attach helicopter to an approved electrical ground. Switch OFF all electrical power. Disconnect external power and battery before opening fuel system. Ensure work area is adequately ventilated.**
- **Engine operation or helicopter flight must be accomplished in accordance with requirements and limitations specified in the 600N Rotorcraft Flight Manual and applicable supplements.**

CAUTION Prevent fuel system contamination. Install caps on the ends of hoses, tubes and fittings as parts are removed. Bag and identify small parts to prevent loss or damage.

NOTE: Gross weight, fuel load and ambient conditions are optional for this functional check.

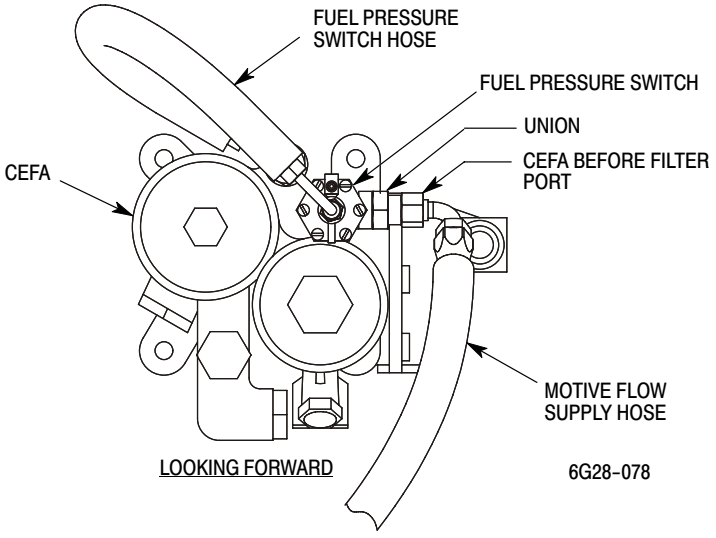

Figure 602. Fuel Transfer System Functional Check

A. Test Setup

(Ref. Figure 602 and Figure 603)

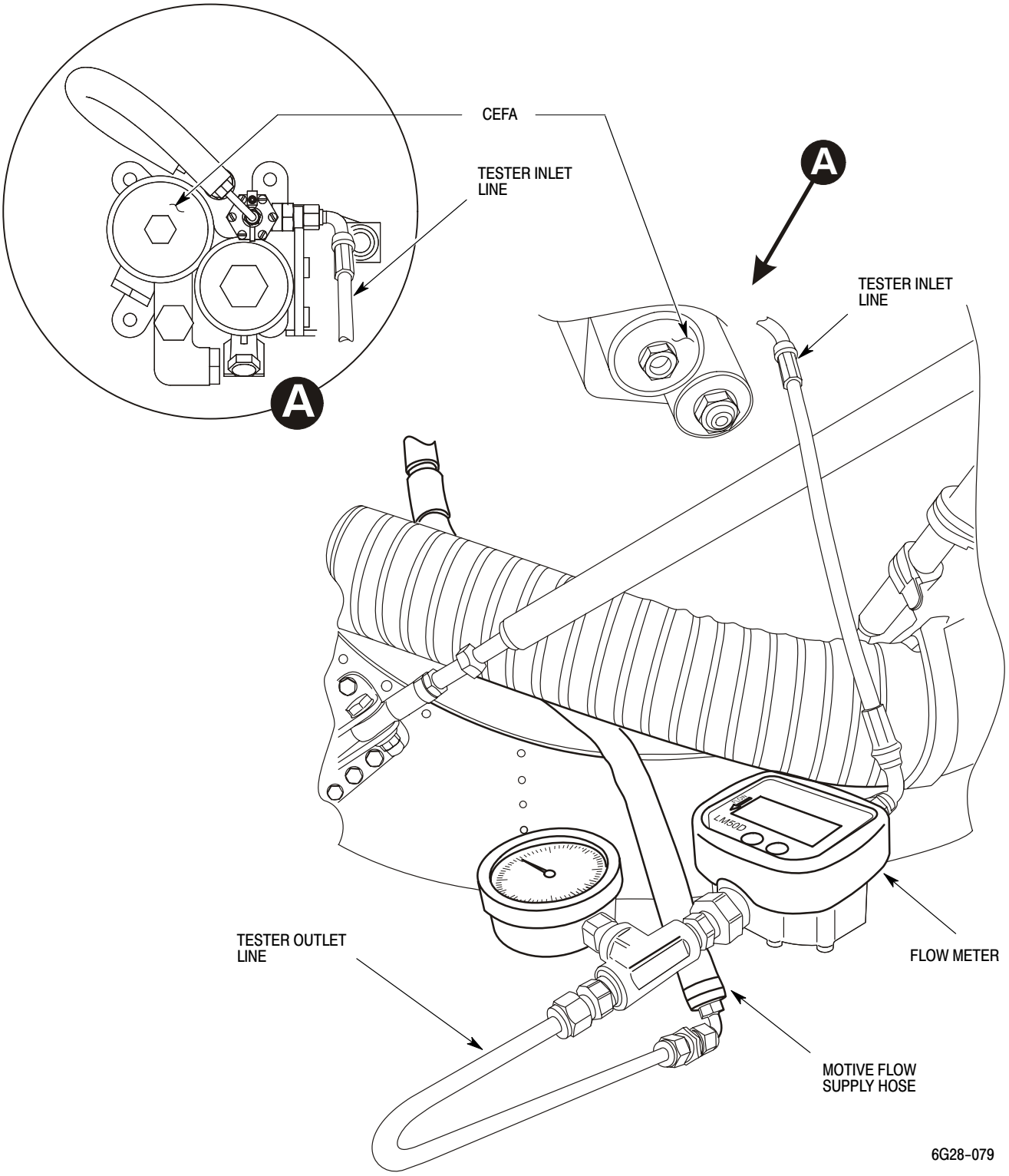

Figure 603. Fuel Transfer Test Setup

(1). Make sure fuel transfer system tester calibration is current.

(2). Disconnect motive flow supply hose from CEFA before filter port union.

(3). Connect inlet line of tester to CEFA before filter port union.

(4). Torque tester fitting to **50 - 65 inch-pounds (5.64 - 7.34 Nm)**.

(5). Connect motive flow supply hose to outlet line of tester.

(6). Torque motive flow supply hose fitting to **50 - 65 inch-pounds (5.64 - 7.34 Nm)**.

B. Check Procedures

(Ref. Figure 602 and Figure 603)

(1). Make sure test setup is complete.

(2). Ground run engine in accordance with Rotorcraft Flight Manual.

(3). Operate the helicopter on the ground at 100 percent main rotor speed (Nr) with collective down.

(4). Stabilize motive flow pressure from 42.0 PSIG minimum to 44.0 PSIG maximum. N1 at approximately 81 percent.

NOTE: Motive flow pressure increases or decreases with engine N1 speed. Increase collective to increase N1 speed. Reduce throttle twist grip to decrease N1 speed.

(5). Record N1, pressure altitude, outside air temperature, motive flow rate and motive flow pressure.

(6). Use the calibration chart provided with the fuel transfer system tester and calculate the calibrated motive flow rate.

(7). The minimum calibrated motive flow rate shall be 0.18 GPM.

(8). If the calibrated motive flow rate is less than 0.18 GPM, check the following components for correct operation.

(a). Check valve

(b). Jet (ejector) pump

(c). Motive flow hoses

(9). Shut down engine ground run in accordance with Rotorcraft Flight Manual.

(10). Disconnect motive flow supply hose from outlet line of tester.

(11). Disconnect inlet line of tester from CEFA before filter port union.

(12). Connect motive flow supply hose to CEFA before filter port union.

(13). Torque motive flow supply hose fitting to **50 - 65 inch-pounds (5.64 - 7.34 Nm)**.

(a). Install minimum shim thickness on main transmission output shaft.

CAUTION Bottom the flexible coupling by holding at the 1.370 inch (3.4798 cm) OD of coupling. Do not bottom coupling by pushing on drive shaft attach flange; doing so may damage coupling.

(b). Bottom forward coupling on main transmission output shaft.

(c). Measure step between aft end of output shaft and shoulder of flexible coupling, by bottoming coupling against shims (refer to **CAUTION** above).

NOTE: Maintain minimum 0.010 inch (0.254 mm) step between aft end of output shaft and coupling shoulder to prevent coupling bolt from bottoming on output shaft.

(d). Install additional shims to maintain 0.010 inch (0.254 mm) minimum step as required.

(3). Position failsafe socket on aft face of forward coupling so that three of the nine holes are indexed to the three nutplates of the coupling in such a way that maximum clearance is obtained between the bolt key and socket. Visually verify proper clearance before installing tail rotor drive shaft.

(4). Repeat previous step to install failsafe socket on input coupling of tail rotor transmission.

(5). Support entire length of tail rotor drive shaft and position end stamped **AFT** to align with tail rotor transmission coupling.

(6). Install three bolts and washers to connect tail rotor transmission coupling to shaft; torque bolts to **80 - 100 inch-pounds (9.04 - 11.30 Nm) plus drag torque**.

CAUTION

- Ensure security of tail rotor gearbox mount studs. Maximum allowable side play at end of stud is 0.004 inch (0.102 mm), maximum allowable axial play is 0.005 inch (0.127 mm) (Ref. Sec. 63-25-10).
- When installing tail rotor transmission and drive shaft, do not compress the forward or aft couplings as damage to the coupling could result.

(7). With assistance, support transmission and shaft in line, for minimum deflection of coupling, and guide drive shaft carefully through tailboom and damper into position.

(8). Secure transmission to four tailboom mounting studs (Ref. Sec. 63-25-10). Install four washers and nuts, torque nuts to **75 - 95 inch-pounds (8.47 - 10.73 Nm) plus drag torque**.

(9). Align forward end of drive shaft with coupling on main transmission output gearshaft. Partially install two bolts as an alignment aid but do not tighten. Align drive shaft inspection markings. If any of four white stripes is indistinct or does not exist, paint (CM311) replacement stripe:

(10). Obtain 0.010-0.020 inch (0.254-0.508 mm) gap between forward flange of tail rotor drive shaft and aft end of socket, using the following procedure:

(a). Back off three attach bolts on forward flange of tail rotor drive shaft assembly 0.050-0.100 inch (1.270-2.540 mm).

(b). Pull and hold tail rotor output shaft of main rotor transmission aft (out of transmission) to remove end play. If rotor brake is installed, make certain that brake pucks do not restrict axial travel of tail rotor output shaft.

(c). Remove end play in tail rotor transmission by applying force to tail rotor blades in opposite direction of operational rotation (while holding forward coupling of tail rotor driveshaft on main transmission output shaft to prevent rotation). Do not push tail rotor drive shaft fore or aft.

(d). Using feeler gage, measure gap between socket and flange of tail rotor drive shaft. Socket flange must be in full contact with flange of flexible coupling.

(e). With assistance, remove tail rotor transmission and driveshaft in line for minimum deflection of coupling.

(f). Using measured gap from step (d). above, add or remove required number of shims at tail rotor transmission input pinion shaft and coupling to obtain specified gap of 0.010-0.020 inch (0.254-0.508 mm).

NOTE:

- Maintain minimum 0.010 inch (0.254 mm) step between coupling shoulder and output shaft (Ref. step (2).).
- If less than specified gap, 0.010-0.020 inch (0.254-0.508 mm) exists under minimum shim requirements, install a maximum of one HS306-326 or HS306-326H washer on each of the four tail rotor transmission mounting studs, between gearbox housing and boom fitting. Apply primer (CM318) to both sides of washer at installation. After washer installation, repeat step (10).

(11). Coat forward coupling splines with grease (CM111) and coupling bolt threads with antiseize compound (36) before assembly. Install coupling and torque failsafe bolt to **250 - 300 inch-pounds (28.25 - 33.90 Nm) plus drag torque**. (Check coupling bolt for drag torque serviceability of 25 inch-pounds minimum (2.82 Nm), 200 inch-pounds (22.60 Nm) maximum.)

(12). With assistance, support transmission and shaft in line for minimum deflection of coupling and guide drive shaft carefully through tailboom and damper into position.

(13). Apply primer (CM318) to the four gearbox mounting studs. Install nuts and washers while the primer is still wet; torque evenly to **75 - 95 inch-pounds (8.47 - 10.73 Nm) plus drag torque**.

CAUTION Verify that a minimum of (1) one thread protrudes through each nut from the four tail rotor transmission mounting studs. If less than one thread is showing, refer to CSP-DEF-6, Structural Repair Manual, to replace with a longer MS1992A803-14 stud and insert.

(14). Install three bolts and washers at forward end of tail rotor drive shaft to connect to forward coupling; torque bolts to **80 - 100 inch-pounds (9.04 - 11.30 Nm) plus drag torque**.

(15). Connect electrical wire to tail rotor transmission chip detector. Torque nut to **12 - 15 inch-pounds (1.36 - 1.69 Nm)**.

(16). Coat pin of Sta. 284.00 bellcrank with grease (CM111) and insert it into bearing in tail rotor pitch control. Pivot bellcrank to align with mating hole in tail rotor transmission and install bolt, washers, nut and cotter pin.

(17). Check transmission oil level and service as required.

(18). Slowly rotate drive shaft and visually check to ensure shaft is not bent and for not less than 0.250 inch (6.35 mm) clearance between shaft and fairing tube at Sta. 137.5. In addition, check for minimum clearance of 0.190 inch (4.83 mm) between shaft and cooling blower scroll.

(19). Install all access doors and covers.

(b). Pull and hold tail rotor output shaft of main rotor transmission aft (out of transmission) to remove end play. If rotor brake is installed, ensure that brake pucks do not restrict axial travel of tail rotor output shaft.

(c). Remove end play in tail rotor transmission by applying force to tail rotor blades in opposite direction of operation (while holding forward coupling of tail rotor drive shaft on main transmission to prevent rotation). Do not push tail rotor drive shaft fore or aft.

(d). Using feeler gage, measure gap between forward coupling flange and flange of tail rotor drive shaft. Record the gap.

(e). With assistance, remove tail rotor transmission and driveshaft in line for minimum deflection of coupling.

(f). Using measured gap from step (d). above, add or remove required number of shims at tail rotor transmission input pinion shaft and coupling to obtain specified gap of 0.010-0.020 inch (0.254-0.508 mm).

NOTE:

- Maintain minimum 0.010 inch (0.254 mm) step between coupling shoulder and output shaft (Ref. Figure 401).
- If less than specified gap, 0.010-0.020 inch (0.254-0.508 mm) exists under minimum shim requirements, install a maximum of one HS306-326 or HS306-326H washer on each of the four tail rotor transmission mounting studs, between gearbox housing and boom fitting. Apply primer (CM318) to both sides of washer at installation. After washer installation, repeat step (10).

(9). Re-install coupling and torque coupling bolt to **250 - 300 inch-pounds (28.25 - 33.90 Nm) plus drag torque**.

(10). With assistance, support tail rotor transmission and shaft in line for minimum deflection of coupling and guide drive shaft carefully through tailboom and damper into position.

(11). Secure transmission to four tailboom mounting studs with washers and nuts; torque to **75 - 95 inch-pounds (8.47 - 10.73 Nm) plus drag torque.**

(12). Install three bolts and washers at forward coupling; torque bolts to **80 - 100 inch-pounds (9.04 - 11.30 Nm) plus drag torque**.

(13). Connect electrical wire to tail rotor transmission chip detector. Torque nut to **12 - 15 inch-pounds (1.36 - 1.69 Nm)**.

(14). Coat pin of Sta. 284.00 bellcrank with grease (CM111) and insert into bearing in tail rotor pitch control. Pivot bellcrank to align with mating hole in tail rotor transmission and install bolt, washers, nut and cotter pin.

(15). Check transmission oil level and service as required (Ref. Sec. 12-10-00).

(16). Slowly rotate driveshaft and check for not less than 0.25 inch (6.35 mm) clearance between shaft and fairing tube at Sta. 137.50. In addition, check for minimum clearance of 0.190 inch (4.83 mm) between shaft and cooling blower scroll.

(17). Install all access doors and covers.

3. Tail Rotor Drive Shaft Damper

(Ref. Figure 603) The tail rotor drive shaft damper is a graphite-filled teflon plate that controls and limits deflection of the tail rotor drive shaft about its approximate mid-point. The damper is spring-loaded against a structural support bracket mounted on the aft section tailboom fairing. On 369FF Model helicopters, a second damper is located at Sta. 137.50 (Ref. Figure 602).

4. Tail Rotor Drive Shaft Damper Replacement

(Ref. Figure 602)

(1). Remove boom-bolts access covers.

(2). Remove tail rotor drive shaft.

(3). Remove two bolts, washers, springs, thin washers, plate and spacers and damper.

NOTE: The damper at Sta. 137.50 (369FF only) has 369DSK152-13 bushings installed inside the Teflon Graphite Damper in conjunction with the spacers.

(4). Position new damper over mounting holes in support bracket. Install plate and spacers with bolts, washers, springs and spacer washers.

CAUTION Ensure washers under boltheads are seated against spacer when tightened. Bolts wear rapidly if clamp-up is not solid.

(5). Adjust damper friction.

(6). Install tail rotor drive shaft.

(7). Displace damper so that it touches tail rotor drive shaft.

(8). Use wire gage to measure damper to shaft clearance 180° from contact point. Minimum acceptable clearance is 0.020 inch (0.508 mm).

(9). Repeat steps (7). and (8). above at 90° intervals from initial check point.

(10). Install boom-bolts access covers.

NOTAR® ANTI-TORQUE SYSTEM DRIVE SHAFTS MAINTENANCE PRACTICES

1. Anti-Torque System Drive Shafts

The Fan Gearbox Drive Shaft connects the main transmission and the fan gearbox. The total drive shaft length is approximately 14 inches long. Flanges on each end of the shaft attach to flexible (Kamatic) type joint coupling on the main transmission output shaft and fan gearbox input shaft.

The Fan Inter-Connecting Drive Shaft is equipped with a kamatic flexible-type joint and mounting flange (coupling) at each end. The shaft connects the fan gearbox to the fan assembly by (two) couplings mounted on the output shaft of the fan gearbox and input shaft of the fan assembly. The fan pitch control rod is routed through the center of the inter-connect drive shaft.

2. Fan Gearbox Drive Shaft Replacement

A. Fan Gearbox Drive Shaft Removal

(Ref. Figure 201)

(1). Remove fan gearbox drive shaft access doors and covers, upper aft section fuselage and interior trim panels as required.

(2). Remove tailboom fairing and tailboom (Ref. Sec. 53-40-30).

(3). Remove fan pitch control rod (Ref. Sec. 67-20-30).

(4). Remove fan inter-connecting drive shaft (Ref. Fan Inter-Connect Drive Shaft Replacement).

WARNING

- **To prevent damage to the engine install F.O.D. cover over engine air inlet.**
- **To prevent damage to shaft provide level support for fan transmission drive shaft during removal or installation.**

(5). Gain access thru plenum chamber and remove drive shaft access panel to aft coupling and remove three bolts and washers that secure fan gearbox drive shaft to input shaft coupling on fan transmission gearbox. Support drive shaft and output shaft coupling on main transmission.

(6). Remove fan gearbox (Ref. Sec. 63-25-30).

(7). Remove fan gearbox drive shaft by removing three bolts and washers from output shaft couping on main transmission.

B. Fan Gearbox Drive Shaft Installation

(Ref. Figure 201) Whenever main transmission, fan gearbox, transmission couplings, coupling shims, fan gearbox drive shaft assembly have been replaced, start installation with step (1). below. If none of these components have been replaced, and only installation is involved, start with step (3). below.

Consumable Materials
(Ref. Section 91-00-00)

Item	Nomenclature
CM111	Grease, aircraft
CM112	Anti-seize compound high temperature
CM115	Grease, oscillating bearing
CM318	Primer

NOTE: Kamatic couplings do not require fail-safe bolts or sockets. When installing 369D25501-9 Kamatic coupling, install SKCP2554-15 coupling bolt supplied with the Kamatic coupling or 369D25503-1 bolt. If fan gearbox drive shaft is replaced for torsional buckling, replace and discard main transmission output gear shaft coupling, fan gearbox coupling and both coupling bolts.

(1). Coat coupling splines with grease (CM111) and coupling bolt threads with anti-seize compound (CM112) before assembly. Install coupling onto fan gearbox input shaft and torque coupling bolt to **250 - 300 inch-pounds (28.25 - 33.90 Nm) plus drag torque**. Check

coupling bolt for drag torque serviceability of 25 inch-pounds (2.82 Nm) minimum, 200 inch-pounds (22.60 Nm) maximum.

(2). Coat forward coupling splines with grease (CM111) and coupling bolt threads with anti-seize compound (CM112) before assembly. Install coupling onto main transmission output shaft and torque coupling bolt to **250 - 300 inch-pounds (28.25 - 33.90 Nm) plus drag torque**. Check coupling bolt for drag torque serviceability of 25 inch-pounds (2.82 Nm) minimum, 200 inch-pounds (22.60 Nm) maximum.

(3). Support drive shaft and position to align with fan transmission coupling on main transmission.

(4). Install fan gearbox with four mounting bolts and torque to **70 - 90 inch pounds (7.90 - 10.17 Nm)**; torque-stripe bolts.

NOTE: If re-shimming is required, removal and installation of the fan gearbox is necessary to obtain the specified gap between the coupling flange and flange of drive shaft.

(5). Install three bolts and washers to connect fan gearbox coupling to drive shaft; torque bolts to **80 - 100 inch-pounds (9.04 - 11.30 Nm) plus drag torque**.

(6). Align forward end of drive shaft with coupling on main transmission output gearshaft. Partially install three bolts as an alignment aid but do not tighten.

(7). Obtain 0.010-0.020 inch (0.254-0.508 mm) gap between forward flange of the fan gearbox drive shaft and flange of forward coupling using the following procedure:

(a). Ensure alignment bolts in previous step are backed off between 0.050-0.100 inch (1.270-2.540 mm).

(b). Pull and hold fan output pinion shaft of main rotor transmission aft (out of transmission) to remove end play. If rotor brake is installed, ensure that brake pucks do not restrict axial travel of fan output shaft.

(c). Remove end play in fan transmission by applying force to the coupling in opposite direction of operation while still holding forward coupling of drive shaft on main transmission. Do not push fan drive shaft fwd or aft.

(d). Using feeler gage, measure gap between forward coupling flange and flange of fan drive shaft using average of 3 readings. Record the gap.

(e). Adjust the number of shims (369A5516-3, -5, -7, or -9). Using measured gap from step 4 above, add or remove required number of shims behind the coupling of main transmission output pinion shaft or between fan gearbox forward coupling to obtain specified gap of 0.010-0.020 inch (0.254-0.508 mm).

NOTE: All shims may be removed from forward or aft coupling if required.

(f). Coat forward coupling splines with grease (CM111) and coupling bolt threads with anti-seize compound (CM112) before assembly. Install coupling and torque coupling bolt to **250 - 300 inch-pounds (28.25 - 33.90 Nm) plus drag torque.** Check coupling bolt for drag torque serviceability of 25 inch-pounds (2.82 Nm) minimum, 200 inch-pounds (22.60 Nm) maximum.

(8). Install three bolts and washers at forward coupling; torque bolts to **80 - 100 inch-pounds (9.04 - 11.30 Nm) plus drag torque**.

(9). Slowly rotate drive shaft and check for not less than 0.25 inch (6.35 mm) clearance between shaft and fairing tube at Sta. 137.50. In addition, check for minimum clearance of 0.190 inch (4.83 mm) between shaft and cooling blower scroll.

defect. Maximum depth after rework is 0.010 inch (0.254 mm). Apply primer (CM318) to repaired area.

(2). After rework, check coupling wall thickness in repair area. The maximum thickness of material removed shall not be more than 10 percent of original material thickness.

10. Transmission Coupling / Fan Coupling Replacement

(Ref. Figure 202)

Consumable Materials
(Ref. Section 91-00-00)

Item	Nomenclature
CM113	Anti-seize compound low temperature

Special Tools
(Ref. Section 91-00-00)

Item	Nomenclature
ST604	Coupling socket

A. Transmission Coupling / Fan Coupling Removal

(1). Remove nut from shaft using coupling socket (ST604) and coupling holding fixture tool; remove coupling.

B. Transmission Coupling / Fan Coupling Installation

(1). Slide coupling onto support shaft.

(2). Install nut using anti-seize compound (CM113) as required. Torque nut to **800 - 1000 inch-pounds (90.39 - 112.98 Nm) plus drag torque** using coupling socket (ST604) and holding fixture.

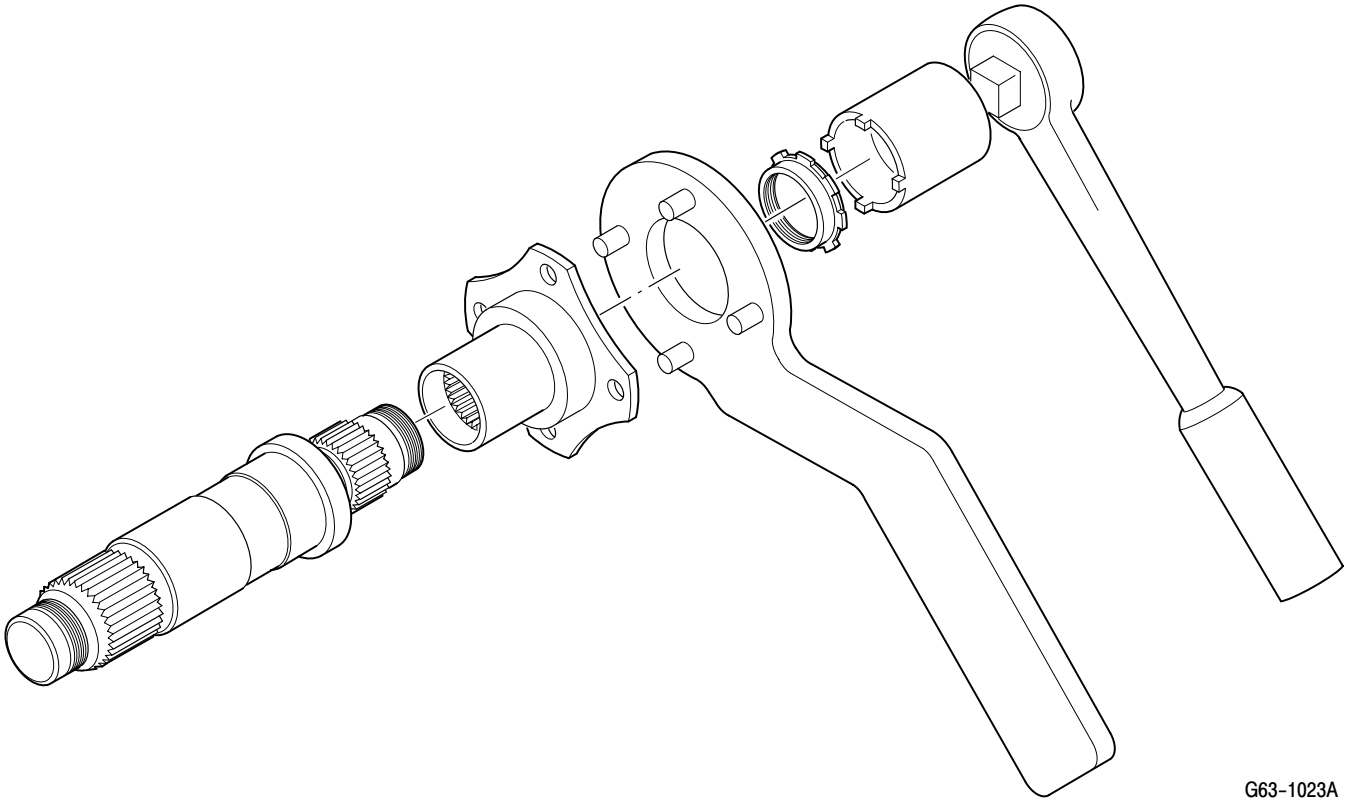

Figure 202. Fan Interconnect Drive Shaft Coupling Installation

This Page Intentionally Left Blank

D. Cooling Blower Installation (369F5100 Transmission)

(Ref. Figure 406)

Consumable Materials
(Ref. Section 91-00-00)

Item	Nomenclature
CM111	Grease, aircraft
CM112	Anti-seize compound high temperature
CM425	Sealing compound
CM702	Lockwire CRES

(1). With belt looped around driven pulley, install oil cooler fan bracket.

NOTE: NAS1304 series bolts may be used in place of NAS6604 series bolts.

(a). Install four bolts with washers through oil cooler mounting bracket into fan bracket.
(b). Before tightening bolts, displace cooler toward the transmission flange to eliminate slack in that direction.
(c). Torque bolts to **70 - 90 inch-pounds (7.91 - 10.17 Nm)** and safety with lockwire (CM702).
(d). After bolts are torqued, seal around bolt heads with sealant (CM425).

CAUTION When installing pulley and guard, make sure the spring pin in pulley is fully engaged inside hole in pulley guard. If the spring pin does not align correctly with hole in pully guard, the torque will be incorrect.

(2). Install pulley guard on main transmission input shaft.
(3). With belt looped around transmission input shaft, position mounting bracket on main transmission pad and loosely install two bolts with washers from the bottom of bracket and two bolts with washers from top of bracket.
(4). Before tightening bolts, insert two shims between bracket and transmission pad.
(5). Verify that blower scroll clears anti-torque drive shaft by a minimum of 0.190 inch (4.826 mm).

CAUTION In the following step, do not use levers or other tools on belt, or in any way force belt onto pulley.

(6). Slide driver pulley onto transmission input shaft to engage belt in teeth of both pulleys.

CAUTION The minimum of 0.010 inch (0.254 mm) measurement between the bolt seating surface and the input shaft must be obtained to ensure proper clamp-up.

- Warped shims or foreign material could provide a false 0.010 inch (0.254 mm) minimum measurement and improper clamp-up could result, which during normal operation, may damage the main transmission input shaft.
- Do not use clutch coupling shims under transmission input coupling. Inside diameter of clutch coupling shim is different than shim used on transmission input coupling. Incorrect diameters can cause an improperly seated shim, misalignment and cocked coupling.

(7). Torque bolts to **70 - 90 inch-pounds (7.91 - 10.17 Nm)**.
(8). Coat threads of coupling bolt with anti-seize compound (CM112).
(9). Lubricate input shaft splines and coupling splines with grease (CM111).
(10). Install input coupling shim and coupling on transmission input shaft with coupling bolt.
(11). Adjust belt tension (Ref. Cooling Blower Belt Tension Check and Adjustment).

NOTE: Check coupling bolt for a minimum of **25 inch-pounds (2.82 Nm)** drag torque.

(12). Torque coupling bolt to **315 - 365 inch-pounds (35.59 - 41.24 Nm) plus drag torque**.
(13). **369D, E, F, and 500N -** Make sure belt tracks correctly (Ref. Cooling Blower Belt Tracking).
(14). Connect drain tube to cooling blower scroll fitting. Clamp tube to fitting with two turns of lockwire (CM702).
(15). Roll exhaust duct rubber connectors onto scroll outlets (transmission oil cooler duct and engine oil cooler duct) and secure with tie straps.

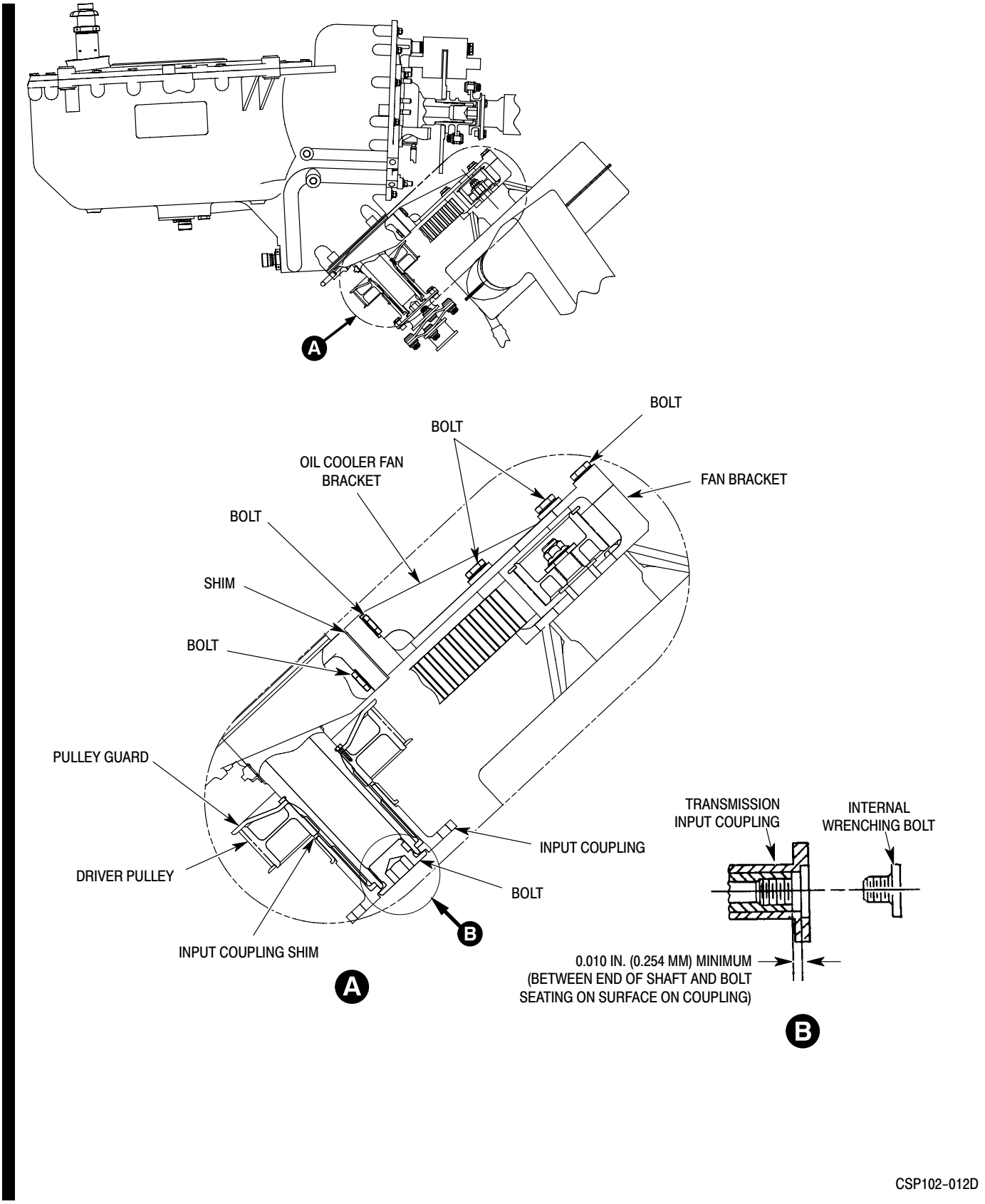

Figure 406. Oil Cooler Blower Installation (369F5100 Transmission)

E. 369D, E, F, and 500N – Cooling Blower Belt Tracking

(Ref. Figure 407)

(1). Make sure the oil cooler belt tracks correctly.

(2). Rotate the lower driver pulley with your hand in a clockwise direction (as you look at the main rotor transmission input). Make sure the belt tracks axially away from the blower on the upper driven pulley.

(3). Rotate the lower driver pulley by hand in a counter-clockwise direction. Make sure the belt tracks axially towards the blower on the upper driven pulley.

(4). If the oil cooler belt does not track correctly, replace with a serviceable belt.

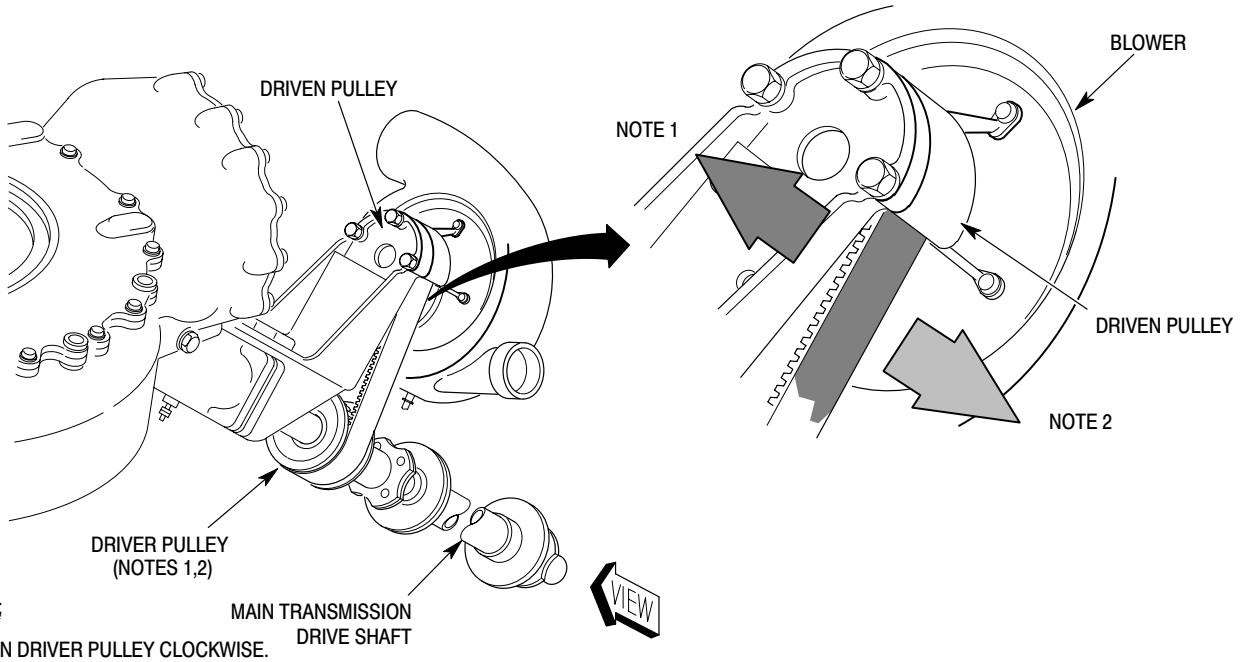

NOTES;

1. TURN DRIVER PULLEY CLOCKWISE.
   VERIFY BELT TRACKS AWAY FROM BLOWER.
2. TURN DRIVER PULLEY COUNTER-CLOCKWISE.
   VERIFY BELT TRACKS TOWARDS BLOWER.

63-2034

Figure 407. Cooling Blower Belt Tracking

This Page Intentionally Left Blank

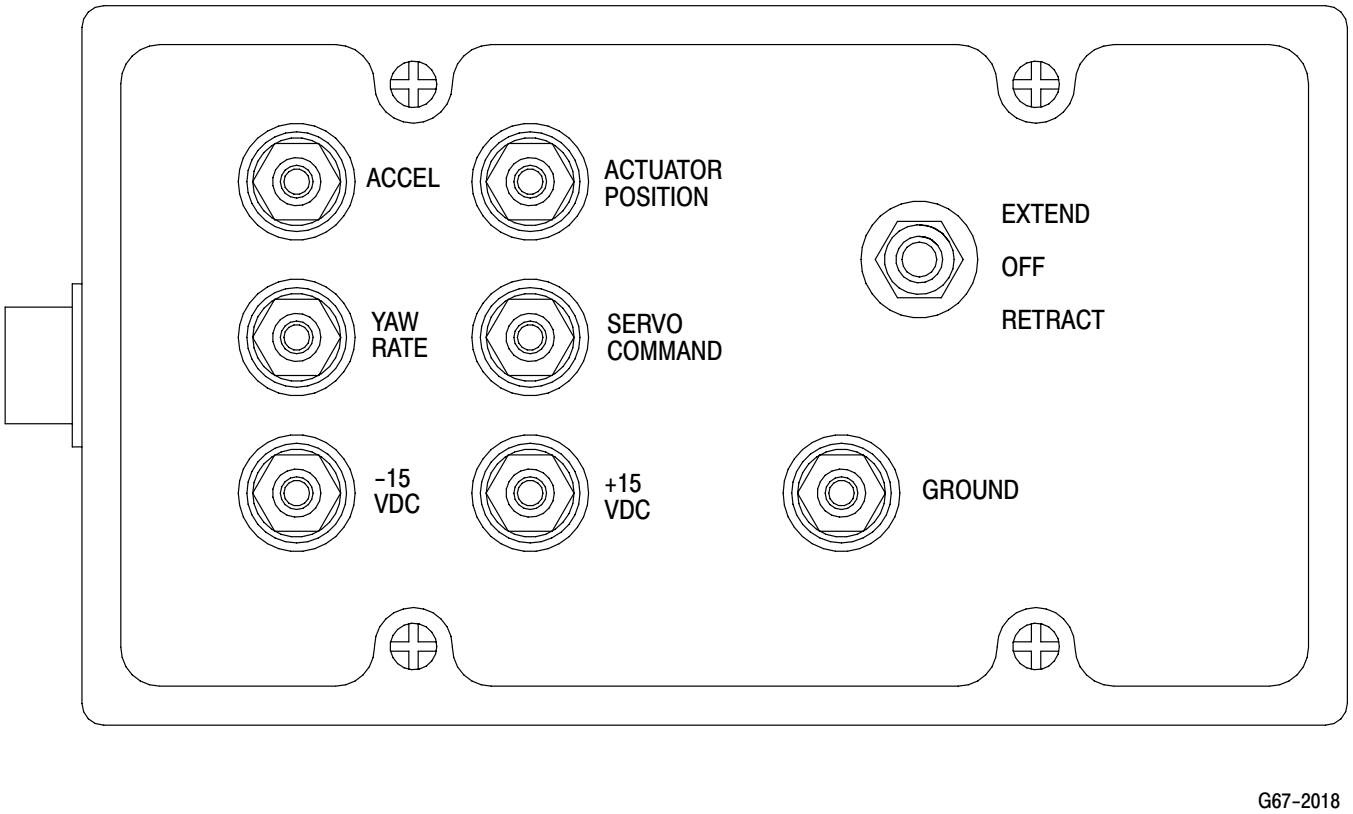

Figure 103. YSAS Ground Test Box

This Page Intentionally Left Blank

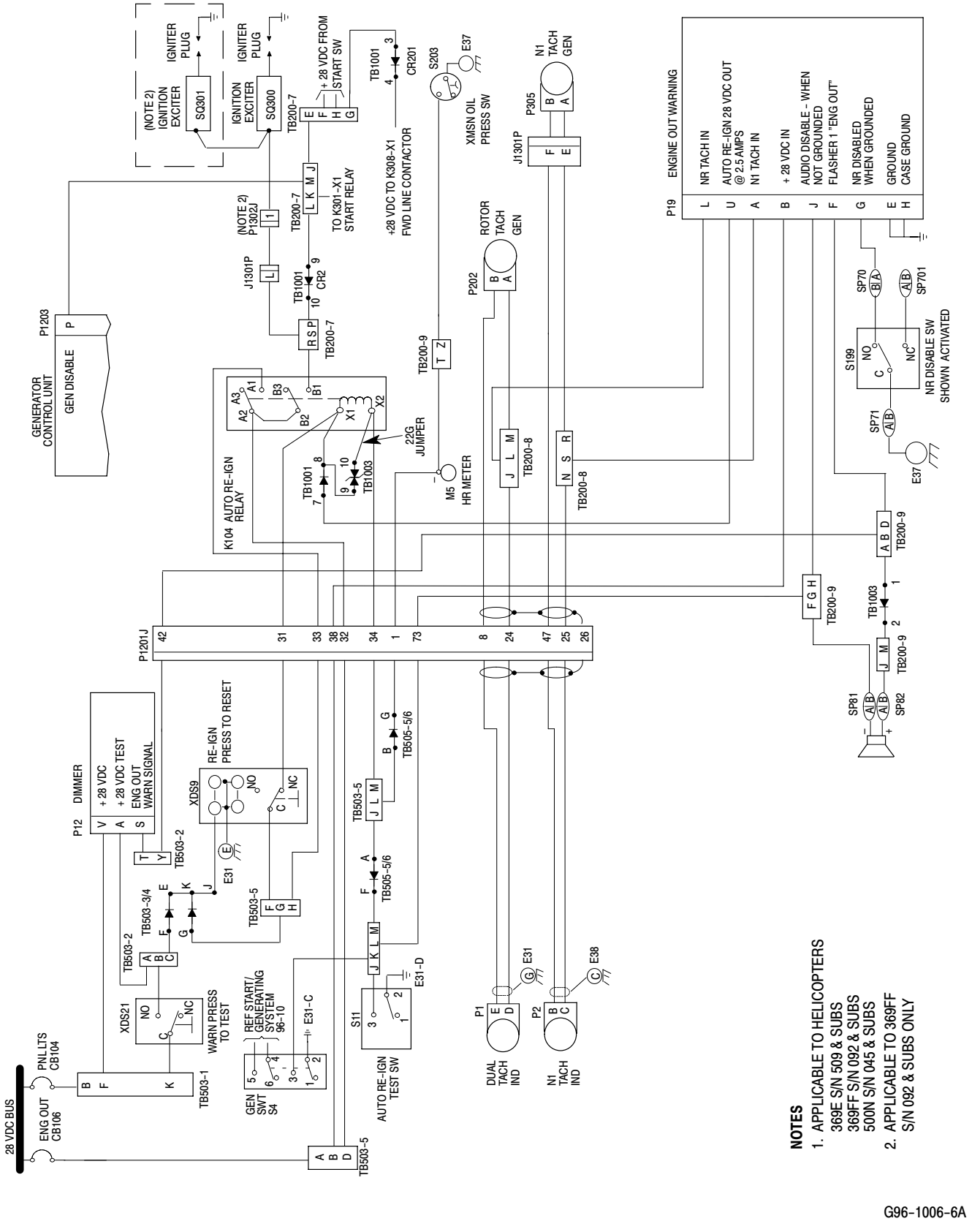

Figure 402. Auto Re-ignition Wiring Diagram (Sheet 6 of 6)

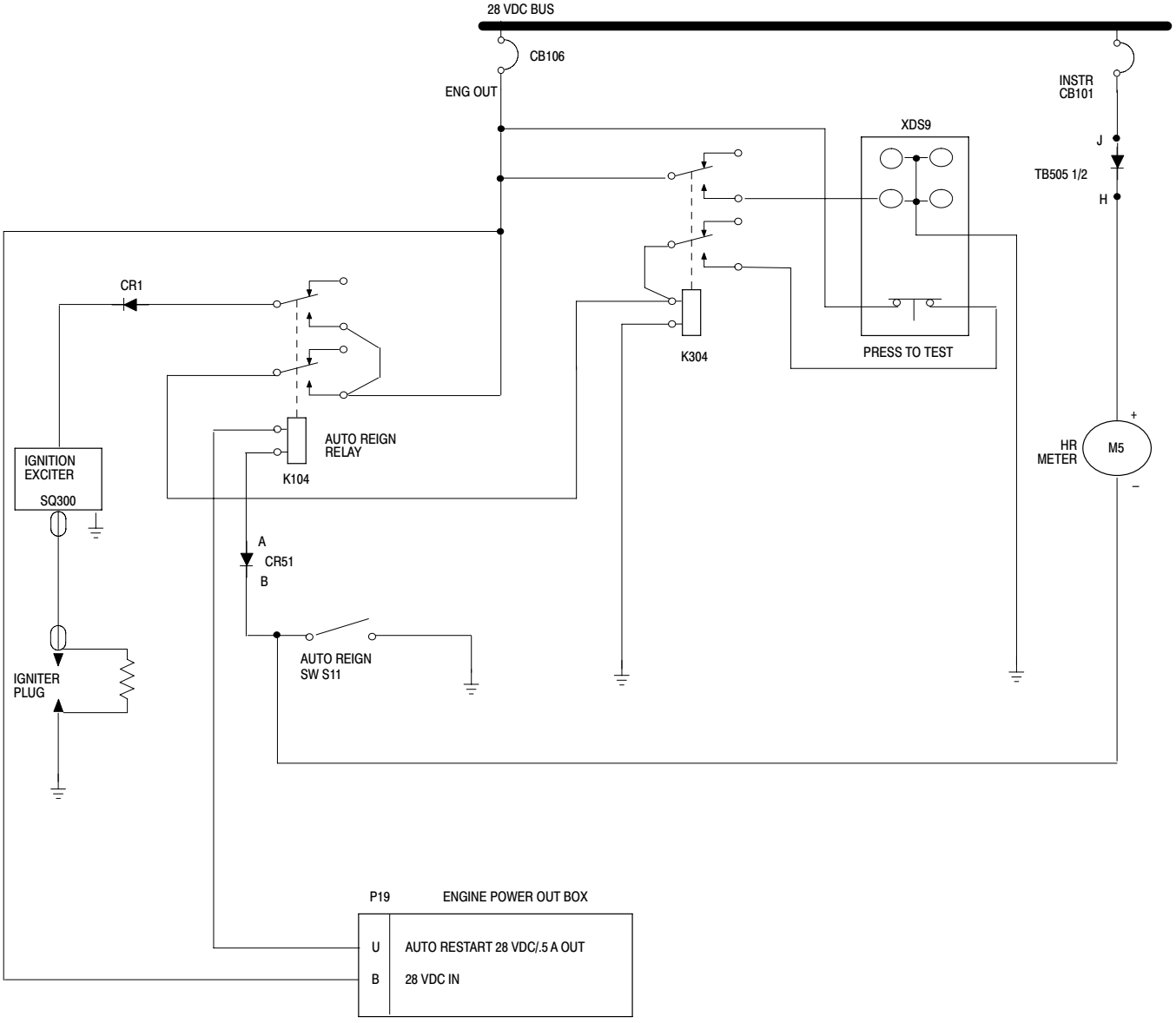

EFFECTIVITY: 369D; ALL
369E; 001-383
369FF; 001-075

G96-1009-1

Figure 403. Auto Re-ignition Schematic (Sheet 1 of 3)

TABLE OF CONTENTS

Para/Figure/Table	Title	Page
75-10-00	**Engine Anti-Icing System (250-C20B, 250-C20R/2, 250-C30 and 250-C47)**	**A**
Maintenance Practices		**201**
1.	Engine Anti-Icing System Description and Operation	201
2.	Engine Anti-Icing System Fault Isolation	201
Table 201.	250-C20B Engine Anti-icing System Fault Isolation	201
Table 202.	250-C20/R2, 250-C30 and 250-C47 Engine Anti-icing System Fault Isolation	202
3.	250-C20B Engine Anti-Icing Valve Control Cable Replacement	202
A.	250-C20B Engine Anti-Icing Valve Control Cable Removal	202
B.	250-C20B Engine Anti-Icing Valve Control Cable Installation	202
Figure 201.	250-C20/R2, 250-C30 and 250-C47 Engine Anti-Icing System Wiring	203
4.	250-C20/R2, 250-C30 and 250-C47 Engine Anti-Icing System Controls Replacement	203
5.	250-C20B Engine Anti-Icing System Inspection	203
6.	250-C20/R2, 250-C30 and 250-C47 Engine Anti-Icing System Inspection	204
7.	250-C20B Engine Anti-Icing System Test	204
8.	250-C20/R2, 250-C30 and 250-C47 Engines Anti-Icing System Test	204
9.	250-C20B Engine Anti-Icing System Control Cable Repair	204
10.	250-C20/R2, 250-C30 and 250-C47 Engine Anti-Icing Valve Repair	204
Figure 202.	250-C20B Engine Anti-Icing System	205
Figure 203.	250-C20/R2, 250-C30 and 250-C47 Engine Anti-Icing Control Valve	206

TABLE OF CONTENTS (Cont.)

Para/Figure/Table	Title	Page

This Page Intentionally Left Blank

TABLE OF CONTENTS

Para/Figure/Table	Title	Page
91-00-00	**Charts**	**A**
	Consumable Materials and Special Tools	**1**
1.	General	1
2.	Consumable Materials	1
3.	Special Tools	1
4.	Manufacturer/Supplier Number	1
	Table 1. Consumable Materials	2
	Table 2. Manufacturer/Supplier Number	11
	Table 3. Special Tools	15
	Table 4. Tool Manufacturer/Supplier Number	21

TABLE OF CONTENTS (Cont.)

Para/Figure/Table	Title	Page

This Page Intentionally Left Blank

Table 3. Special Tools (Cont.)

Item No.	Part No.	Nomenclature	Function	Vendor (Table 4)
ST508	369D29936 369A7300-ATP-1	Collective bungee installation tool (369D/E/FF - 500N) (600N)	Remove bungee installation tool. Dismantle bungee assembly.	
ST509	Not used at this time			
ST510	369D29985	Bungee spring compression tool rod and channel (369D/E/FF - 500N)	Compress collective bungee.	
ST511	369D29910-32501	Test fixture	Shop aid for rigging main rotor controls.	
		Anti-Torque		
ST601	500N9901-3	Rigging pin	Rigging of NOTAR® anti-torque flight controls.	
ST602	830006-809-00653	Spring tension removal tool	Removal of anti-torque bungee spring & splitter spring.	
ST603	ATP1-500N5365-1 -TD	Tip seal cutting fixture	Anti-torque tip seal felt metal cutting tool.	
ST604	500N9505-1	Coupling socket	Fan & gearbox coupling socket.	
ST605	500N9506-1	Fan nut socket	Anti-torque fan removal.	
ST606	369D29931 369D29907	T/R swashplate rigging tool (2-bladed tail rotor) (4-bladed tail rotor)	Rig tail rotor controls.	
ST607	369D29823 369D29826	Adapter, torque wrench (2-bladed tail rotor) (4-bladed tail rotor)	Install tail rotor nut.	
ST608	369D29822-3	Pitch control assembly holding block	Secure tail rotor swashplate block to remove/install nut.	
ST609	369D29822-5	Adapter, torque wrench	Remove/install tail rotor swashplate housing bearing nut.	
ST610	369A1600-80902	Bushing wrench	Install and torque tail rotor hub threaded bushing.	
ST611	83006-809-00090 -1	Arbor press fixture, 369A7951-5 bearing	Install tail rotor pitch control link bearings.	
ST612	83006-809-00090 -15	Staking tool, 369A7951-5 bearing	Stake tail rotor pitch control link bearings.	
ST613	269A9232	Plug, bearing removal	Remove tail rotor pitch control housing bearings.	
ST614	500N5364-ATP1	Regreasing tool, fan bearing	Regreasing of the 500N5364 and 500N7120 fan bearings.	

Table 3. Special Tools (Cont.)

Item No.	Part No.	Nomenclature	Function	Vendor (Table 4)
		Main Rotor		
ST701	369A9829	Main rotor wrench assembly	Loosening/torquing of main rotor mast nut.	
ST702	369D29932 600N9932	Hub puller (369D/E/FF - 500N) (600N)	Separate main rotor hub from mast.	
ST703	369A9933 *369A9933-5	Main rotor hub driver	Seat main rotor hub.	
ST704	369D29957 old FRDH101 new	Adapter, torque wrench	Install main rotor drive shaft fasteners.	
ST705	369A9825	Pitch bearing stud wrench	Remove main rotor hub pitch bearing pivot pin.	
ST706	83006-809-00090 -1	Arbor press fixture (369A7951-5 bearing)	Install main rotor pitch housing bearings.	
ST707	83006-809-00090 -15	Staking tool (369A7951-5 bearing)	Staking main rotor pitch housing bearings.	
ST708	83006-809-00088	Staking tool (pilot and punch) (369A7951-45 bearing)	Install pitch control housing bearings and swage rings.	
ST709	3006-809-00090 -1/-8	Arbor press fixture (369A7951-15 bearing)	Install main rotor blade bearings.	
ST710	3006-809-00090 -15/-20	Staking tool (369A7951-15 bearing)	Stake main rotor blade bearings.	
		Fuel		
ST801	MITYVACR #4000	Hand operated vacuum pump kit	Pump down airframe and engine fuel systems for vacuum leak check.	TS13
ST801-1	AN840-D	Nipple, hose	Vacuum pump adaptive hardware.	
ST801-2	AN910-1D	Coupling		
ST801-3	AN816-4D	Nipple		
ST801-4	AS3084-04	O-ring		
ST802	369A8100-80902	Spanner wrench	Fuel cross-over fitting torquing.	
ST803	PTE1-600N8100-TD	Fuel Transfer System Functional Tester	Perform fuel transfer system functional check.	TS10

Table 3. Special Tools (Cont.)

Item No.	Part No.	Nomenclature	Function	Vendor (Table 4)
		Track and Balance		
ST901	369D29942	Tip cap assembly	Tracking main rotor blades.	
ST902	369H9928	Main rotor blade fixture and tab bending tool	Adjusting main rotor blade tab angle/blade track.	
ST903		Balancer/analyzer instrument kit	Track and balance of dynamic components.	TS5
		Electrical / Instruments / Avionics		
ST1001	RXT20-5 (extract) RTM20-9 (insert)	HYTIP insertion/extraction tool.	Install/remove HYTIP electrical contacts in terminal block modules.	TS4
ST1002	M8ND N14HCT2	HYTOOL M8ND and N14HCT	Crimp MINILOK and MODULOK terminal block contact tips on electrical wire.	TS4
ST1003	107-0970	Hand operated crimping tool (with positioners 107-0976 and 107-0977)	Crimp removable contacts in rectangular connectors.	TS18
ST1004	107R1001 107-1015	Contact removal tool / Contact insertion tool	Remove and insert removable contacts in rectangular connectors.	TS18
ST1005	CEIT 20	Insertion/extraction tool (20 Wire Mate connector)	Connect/disconnect No. 20 Wire Mate electrical connectors.	TS8
ST1006	CEIT 16	Insertion/extraction tool (16 Wire Mate connector)	Connect/disconnect No. 16 Wire Mate electrical connectors.	TS8
ST1007	CTJ-RO6	Deutsche module removal tool	Remove terminal block modules from instrument panel terminal block frames.	
ST1008	46673	Crimping tool	Thermocouple harness terminal lugs.	TS1
ST1009	^931	Voltmeter	Measure voltage.	TS17
ST1010	^260-7	Volt-ohmmeter	Measure resistance and voltage.	TS14
ST1011	**2312-G-8	Turbine temperature indicating system test set	Test and calibrate TOT indicating system.	TS2
ST1012	**BH112JA-36	Jetcal tester	Test and calibrate TOT indicating system.	TS7
ST1013	500N9701	Yaw S.A.S. test box	Anti-Torque stability augmentation system control rigging.	TS10
ST1014	DPI 603	Pressure calibrator	Test and calibrate torque indicating system (600N).	TS20

Table 3. Special Tools (Cont.)

Item No.	Part No.	Nomenclature	Function	Vendor (Table 4)
		Miscellaneous		
ST2001	369H4009	Pitot tube cover	Pitot Tube protection.	
ST2002	369H6661-1	Blade socks	Main rotor blade tiedown.	
ST2003	369D29913-37	Main rotor blade storage rack (369D/E/FF - 500N)	Store main rotor blades. Blade folding pole included.	
ST2004	369H9803-503	Air inlet fairing cover	Air inlet cover.	
ST2005	369H9804-101	Engine exhaust cover	Engine exhaust duct cover.	
ST2006	51-C-887	Sleeve swage, oval C-type	Particle separator installation.	TS12
ST2007	C-6000	Rivnut installation speed header	Particle separator installation.	TS3
ST2008	C-3576	Rivnut keyway cutter	Particle separator installation.	TS3
ST2009	HG85-10	Inspection gauge	Lockbolt installation inspection.	
ST2010	369D29983	Adapter, torque wrench (369D/E/FF)	Torque tailboom attachment bolts.	
ST2011	369A6001-50506 -1	Left landing gear foot drill jig	Enlarge holes in lockbolt fastened landing gear strut to install machine-bolt-attached skids.	
ST2012	369A6001-50506 -2	Right landing gear foot drill jig	Enlarge holes in lockbolt fastened landing gear strut to install machine-bolt-attached skids.	
ST2013	WSI-HT-12AS	Bushing installation tool (WSI-B-12AS grommet)	Install tail rotor control rod grommets.	TS16
ST2014	369D23601-80910	Angle measuring tool	Check horizontal stabilizer angle of incidence.	

^ Primary selection. Any equivalent meter with an accuracy capable of measuring voltage within 0.25% full scale range may be used.

* Hammer and handle same as 369A9933; –7 driver replaces –3 driver.

** Either tester may be used.